Oct. 20, 1970 R. J. GUTRICH 3,535,161

CLEARING SEWER LINES AND THE LIKE

Filed Jan. 27, 1969

Fig. 1.

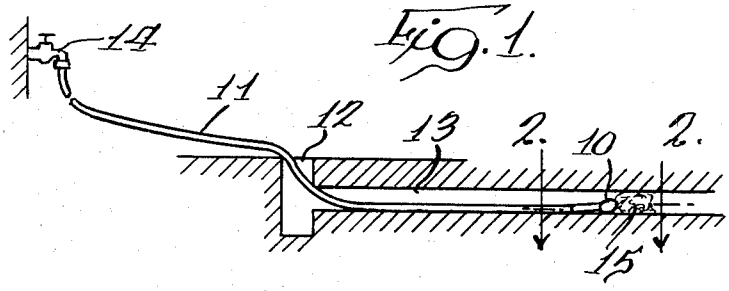

Fig. 2.

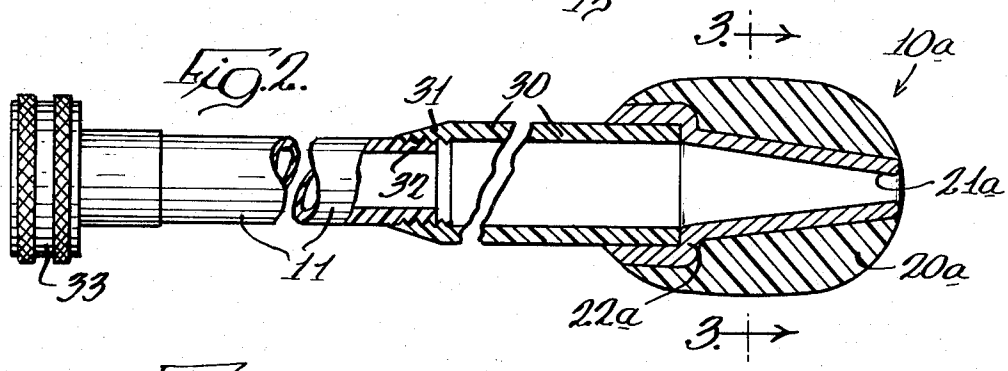

Fig. 3.

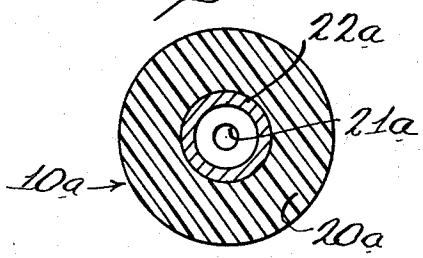

Fig. 4.

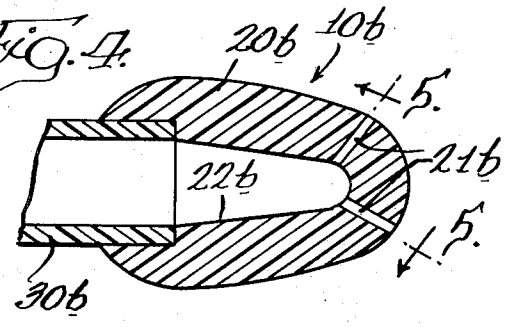

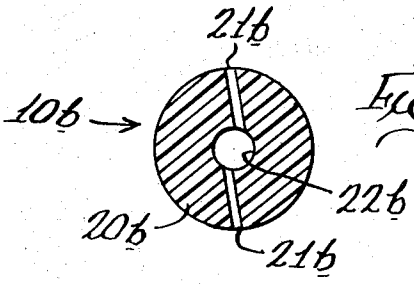

Fig. 5

Inventor
Robert J. Gutrich
By Gary, Parker,
Juettner, Pigott & Cullinan
Attys

United States Patent Office

3,535,161
Patented Oct. 20, 1970

1

3,535,161

CLEARING SEWER LINES AND THE LIKE

Robert J. Gutrich, 10950 S. Homan Ave.,
Chicago, Ill., 60655

Filed Jan. 27, 1969, Ser. No. 793,989
Int. Cl. B08b 9/06
U.S. Cl. 134—24 2 Claims

ABSTRACT OF THE DISCLOSURE

Process and apparatus for clearing sewer lines and the like by application of water at normal household pressures through flexible tubing to jet creating head means connected to the end of the tubing and inserted in and passed through the line by means of the tubing; there being a first axial jet head for opening up a passage through the line and a second tangential or swirl jet head for thoroughly clearing the line.

THE DRAWINGS

FIG. 1 is a schematic illustration of a sewer line and the apparatus of the invention in the process of clearing the same;

FIG. 2 is an enlarged side view, partly in elevation and partly in longitudinal section, of one embodiment of said apparatus, the section being taken substantially on line 2—2 of FIG. 1;

FIG. 3 is a cross section of the axial jet head taken substantially on line 3—3 of FIG. 2;

FIG. 4 is a longitudinal section of one embodiment of the swirl jet head of said apparatus; and

FIG. 5 is a cross section of the swirl jet head taken substantially on line 5—5 of FIG. 4.

DESCRIPTION

In order to acquaint those skilled in the art with the manner of making and using my apparatus and practicing my process, I have illustrated and will now describe the best mode presently contemplated by me of carrying out my invention.

While I have illustrated and will hereinafter describe my invention in connection primarily with the cleaning of sewer lines, it is to be pointed out, and will become manifest, that the invention is applicable to any plumbing line or fixture that has an open or unguarded inlet end; for example, floor drains, house to street sewers, toilets, sinks, etc.

In any such drain system or line, I have found it customary that blockages will build up from the side walls of the pipe or line and gradually increase in bulk in both the axial and radially inward directions, so that it is essentially the central core of the pipe or line that is the last portion thereof to close up. The longer lived parts of the blockage become solidified with age, but the central core is either slightly open or at least still relatively soft at the time the homeowner becomes sufficiently alarmed to take action on the problem.

According to the present invention, this blockage is quickly, easily and economically cleared and the pipe or line totally cleaned out by attaching a jet creating head **10** to the end of a flexible tube **11**, using the tube to insert and push the head through the inlet **12** of a sewer or

2

like drain line **13**, coupling the tube directly (or if necessary by a length of ordinary garden hose) to any conveniently available water tap or faucet **14**, and using water at normal household pressure to clear the line.

In order to work primarily on the relatively soft core of the obstruction at the beginning of the cleaning process, I provide a first head for converting the household water into a hardhitting, high velocity axially directed jet. One embodiment of this head is shown in FIGS. 2 and 3 and indicated generally at **10***a*. The head comprises a streamlined body **20***a*, which I prefer to make of egg-shape so as to facilitate entry of the head into and removal of the same from the line; and also to facilitate passage of the same through elbows, bends and other plumbing fittings and fixtures, and through the central core of obstructions encountered by the head. Axially thereof, the body is provided with a passage **21***a* designed in accord with the conventional standards of the hydraulic nozzle art to create a compact, hard-hitting jet of water. In the preferred embodiment illustrated herein, I have encased a standard high velocity jet nozzle **22***a* within an egg-shaped body of plastic to provide a compact and economical axial jet head.

The head **10***a* is of a size substantially smaller than the inner diameter of the pipe or line **13** to facilitate its insertion therein and passage therethrough, and also to accommodate passage of the head through the cleared central core of an obstruction without necessity for complete clearing of the obstruction at this stage of the process. For example, I have found that a head having an outer diameter of 1¾ inches works very well in the clearing of 4 to 8 inch inner diameter sewer and drain lines. It is manifest, of course, that the size of the head may be varied to meet the requirements of particular drain lines and varying local conditions.

To facilitate passage of the head through the line, and especially through the elbows and bends therein, I prefer to provide the head **10** with an integral length of conduit **30** having a degree of resiliency or flexibility correlated to the character of the sewer or drain line to be cleared. This conduit may suitably comprise a 10 inch length of standardly available tubing the same as or compatible with the tube **11**.

At their adjacent ends, the conduit **30** and tube **11** are provided with mating coupling parts **31** and **32** for detachable connection of the head **10** to the tube **11**. The tube and the conduit are selected of highly flexible or resilient materials for drains having short traps or plural bends therein, and/or plumbing fixtures of a fragile character, such for example as water closets and their drain lines; of relatively stiff or hard materials for rougher or plainer lines, such as house to street sewers; and of intermediate degrees of resiliency for other types of work. The materials are also preferably selected to be resistant to heat and chemical deterioration so as to accommodate use of hot water and drain clearing chemicals in practice of the process of this invention. The coupler parts **31** and **32** are designed so as to present no external or internal obstruction. Thus, the tube and conduit serve to so support the head **10** as to facilitate its movement through unobstructed portions of the drain and to bring it into proper disposition relative to the soft central core of obstructions.

At its inlet end, the tube **11** is provided with a standard plastic garden hose fitting **33** to facilitate its connection

to the faucet **14**, a length of garden hose and/or another length of tube **11**.

In use, the head **10***a* is connected by conduit **30** to the tube **11**. The head is then inserted in the sewer or other plumbing inlet **12** and thence into the drain line **13**. It will be observed that no tools are required, and that no disassembly of the line or any fixture affiliated therewith is required in use of my apparatus and practice of my process. The tube **11** is used to push the head, conduit and leading portions of tubing down the line until the head encounters an obstruction, such as the one indicated generally at **15**. A charge of obstruction clearing chemicals (any of the chemicals commonly available for this purpose) may then be inserted in the faucet end of the tube, the tube connected to the faucet **14** (directly or by means of a garden hose) and the hot water turned on. Actually, the hot water tap should be opened beforehand and the water run until very hot before the tube is connected to the faucet so as to assure delivery of very hot water to the jet head.

In actual practice, the use of chemicals is not always required, and thus this step in the process may be omitted. In most cases, it is advisable first to attempt to clear the line simply with hot water; and if this does not work fast enough to suit the convenience of the operator, the application of hot water may be temporarily discontinued, the chemicals inserted in the inlet end of the tube **11** (not the garden hose), the hot water applied for a second or two to carry the chemicals to the obstruction, the water stopped to allow chemical soaking of the obstruction for several minutes, and the water then applied to flush open the obstruction.

Whether using chemicals or not, it is generally advisable (though not essential) to use the hot water tap as the water supply, since hot water will assist in breaking up or dissolving the grease that practically always is present in and contributing to the obstruction.

In any event, liquid is supplied at normal household water pressure to the nozzle **22***a* where it is converted to a compact hardhitting jet stream that is directed axially at the softest, most recently accumulated and most vulnerable portion of the obstruction, so as to blast or erode a hole therethrough in a very short period of time. The tube may be reciprocated in a short stroke so as to vary the distance of the nozzle from the obstruction, and thus the target area of the emitted jet, until a hole is opened up of sufficient diameter to permit passage of the head **10***a*.

When the head can be passed through the first obstruction, the water may be turned off and additional portions of the tube pushed into the drain to move the head down the drain until it encounters another accumulation, whereupon the above-recited steps are duplicated. This sequence is repeated until the entire line is opened up, at least to the extent of passage through the line of the head **10***a*, conduit **30** and tube **11**. The tube may be in standard 25 and/or 50 foot or longer lengths; lengths being added to the original tube as required to traverse the entire line.

When the line has been opened by the above-described use of the axial jet head **10***a*, the tube **11** is withdrawn from the line and the head **10***a* is replaced by a second head **10***b*, one embodiment of which is illustrated in FIGS. 4 and 5. This head comprises a streamlined body **20***b* which is preferably of the same size and external configuration as the head **10***a*. However, if desired, it could be of different shape and/or of somewhat larger diameter. The characteristic feature of this head is the provision therein of one or more passage means **21***b* disposed tangentially or secantly thereof, and each so designed within the skill of the hydraulic nozzle art as to create a generally radially directed jet stream of water which, when the head is inserted in the drain line, will cause the water to swirl circumferentially within the line with high impact force. This head **10***b* may be comprised of a plastic or other streamlined body having an integral

inlet conduit **30***b*, a central water receiving supply bore **22***b*, and a pair of passages **21***b* communicating with the bore **22***b*. In the illustrated embodiment, the passages **21***b* are two in number, extend tangentially or secantly relative to the bore **22***b* as shown in FIG. 5, and are inclined forwardly relative to the axis of the bore as shown in FIG. 4 so as to create a forwardly moving, circumferentially swirling, hard-hitting wall of water on the inner surface of the drain line. To enhance turbulence, the passages may be disposed at slightly different inclinations to the body as shown in FIG. 4.

When the head **10***b* has been substituted for the head **10***a*, the tube is reinserted in the drain line **13** and the hot water is turned on at the tap or faucet **14**. Then, the tube is fed relatively slowly into the line, whereupon the jet nozzles or passages **21***b* of the head **10***b* create streams of water hitting the inner surfaces of the line and cause these streams to form into a wall of hot water having force components acting radially outwardly, axially forwardly and circumferentially about the inner surface of the line, whereupon the water thoroughly scours the line to clear it of accumulated debris.

When this forwardly moving wall of water encounters one of the obstructions previously opened by the axial jet head, many forces come into play over the whole upstream side of the obstruction, e.g., heat to dissolve the grease, radial and swirling forces to break up the material comprising the blockage, and forwardly moving forces working on and washing away dissolved or loosened debris. The result is rapid dissolution of the entire obstruction and flushing of the same down the drain that is in the process of being cleared.

Again, should unusual difficulty be encountered in removal of an obstruction, chemicals may be used to assist in breaking up and/or dissolving the pipe obstructing mass. For example, the head may be run in, chemicals inserted in the tube, the hot water run for a second or two to carry the chemicals to the obstructions, the chemicals left to soak for awhile, and the hot water run for a few minutes to flush away the dissolved debris. By repeating this sequence of steps at every ten feet or so of the line, thorough scouring of the inner surface of the line and complete clearing of it may easily be accomplished.

Once a line is opened, the divergent jet head **10***b* may be used at periodic intervals, in the manner above described, for preventative maintenance purposes to keep the drain fully open and clear.

Where the apparatus is to be used in connection with water closets and other porcelain fixtures, the heads **10***a* and **10***b* may be coated with rubber or the like to prevent damage to and/or marring of the porcelain.

Thus, it is apparent that the objects and advantages of this invention are attained in a convenient economical and practical manner.

While I have shown and described what I regard to be the preferred embodiment of my invention, it is to be appreciated that various changes, rearrangements and modifications may be made therein without department from the scope of the invention, as defined by the appended claims.

I claim:

1. A process of clearing sewer lines comprising the steps of (a) connecting a head forming an axially directed jet stream to the end of a length of tubing, (b) inserting said head in the line, (c) pushing said head into the line by pushing the tubing into said line until said head encounters an obstruction, (d) forcing water into said tubing at normal household pressure until the obstruction is cleared, (e) repeating steps (c) and (d), then (f) connecting to the tubing a head forming a generally tangentially and forwardly directed jet, and (g) inserting and pushing the latter head through the line while forcing water therethrough until the entire line is clear.

2. A process as set forth in claim **1**, including the

step of inserting obstruction clearing chemicals in the tubing between performance of said steps (c) and (d).

References Cited

UNITED STATES PATENTS

1,587,194	6/1926	Sladden	134—167
1,803,425	5/1931	Cunningham.	
2,117,648	5/1938	Bottorf.	
2,232,358	2/1941	Baerer.	
2,245,554	6/1941	Court	134—24
2,735,794	2/1956	Pletcher	134—24
3,075,535	1/1963	Lasting	134—167
3,215,560	11/1965	Kredit	134—22 XR
3,321,184	5/1967	Goss	134—167

MORRIS O. WOLK, Primary Examiner

J. T. ZATARGA, Assistant Examiner

U.S. Cl. X.R.

134—167