(No Model.) 6 Sheets—Sheet 1.

C. SPIRO.

TYPE WRITING MACHINE.

No. 352,160. Patented Nov. 9, 1886.

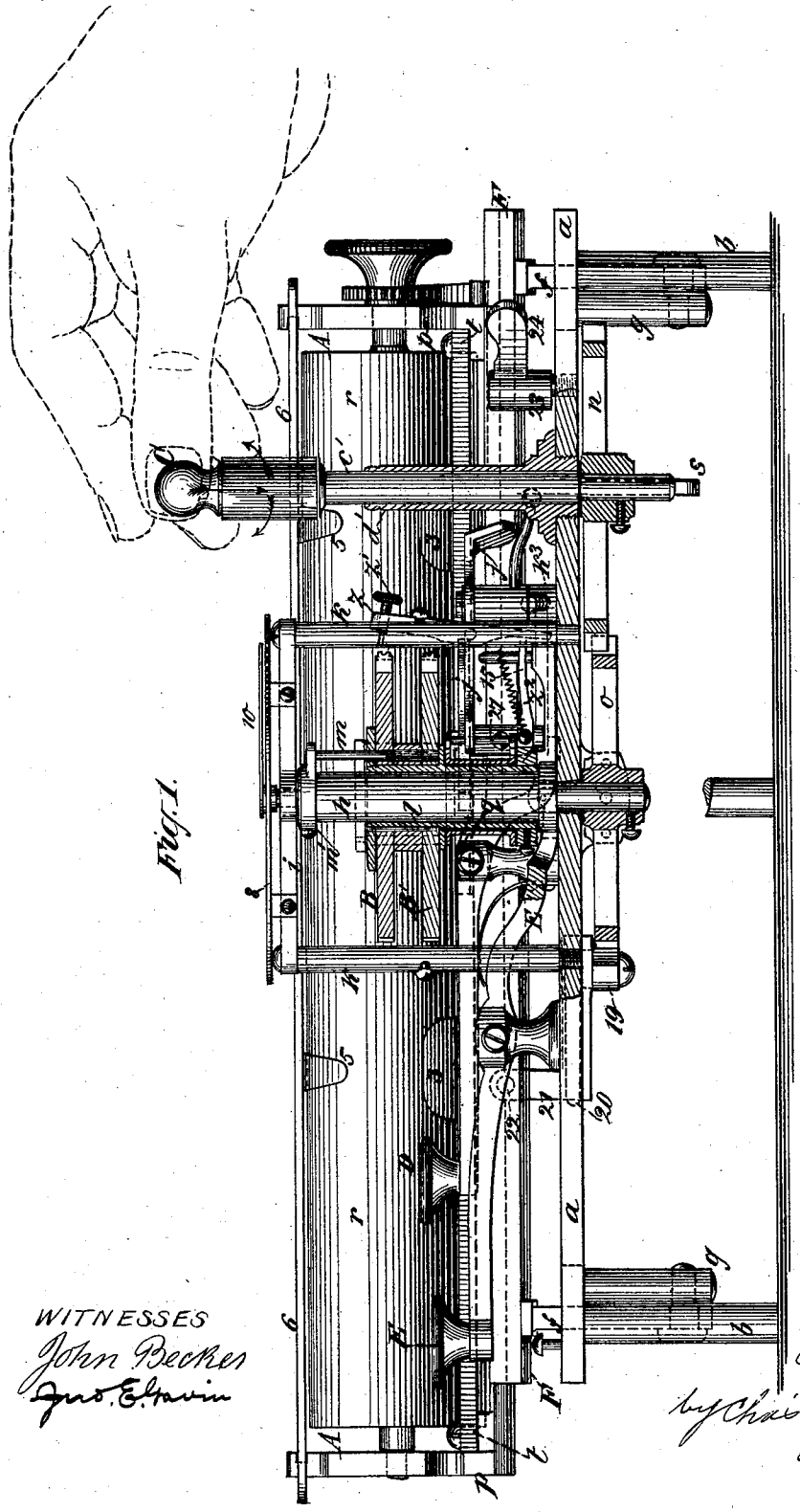

Fig. 1.

WITNESSES
John Becker
Jno. E. Ravin

INVENTOR
Chas Spiro.
by Chas. M. Higgins
Attorney.

(No Model.) 6 Sheets—Sheet 2.

C. SPIRO.

TYPE WRITING MACHINE.

No. 352,160. Patented Nov. 9, 1886.

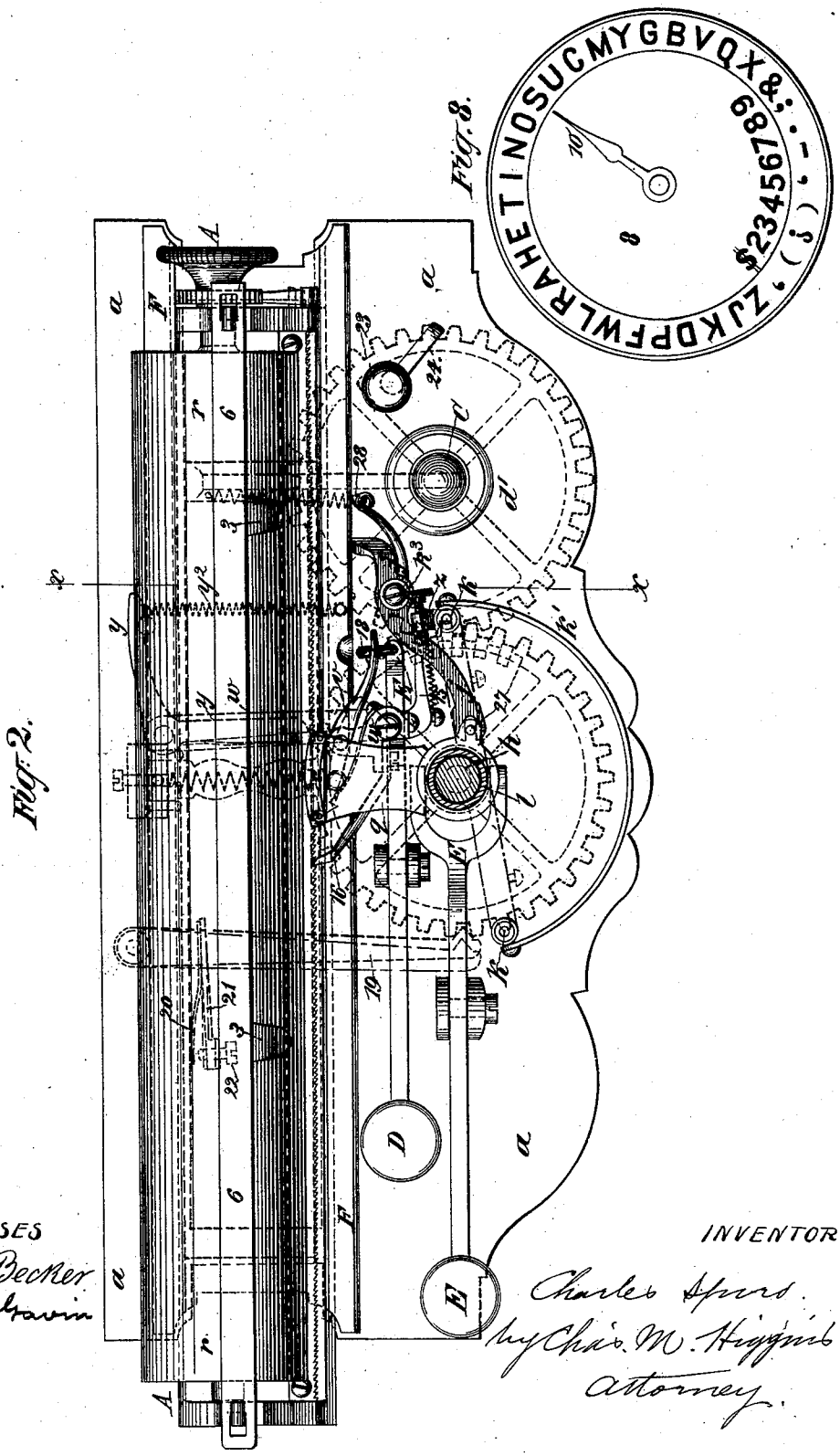

(No Model.) 6 Sheets—Sheet 3.

C. SPIRO.

TYPE WRITING MACHINE.

No. 352,160. Patented Nov. 9, 1886.

Fig. 3.

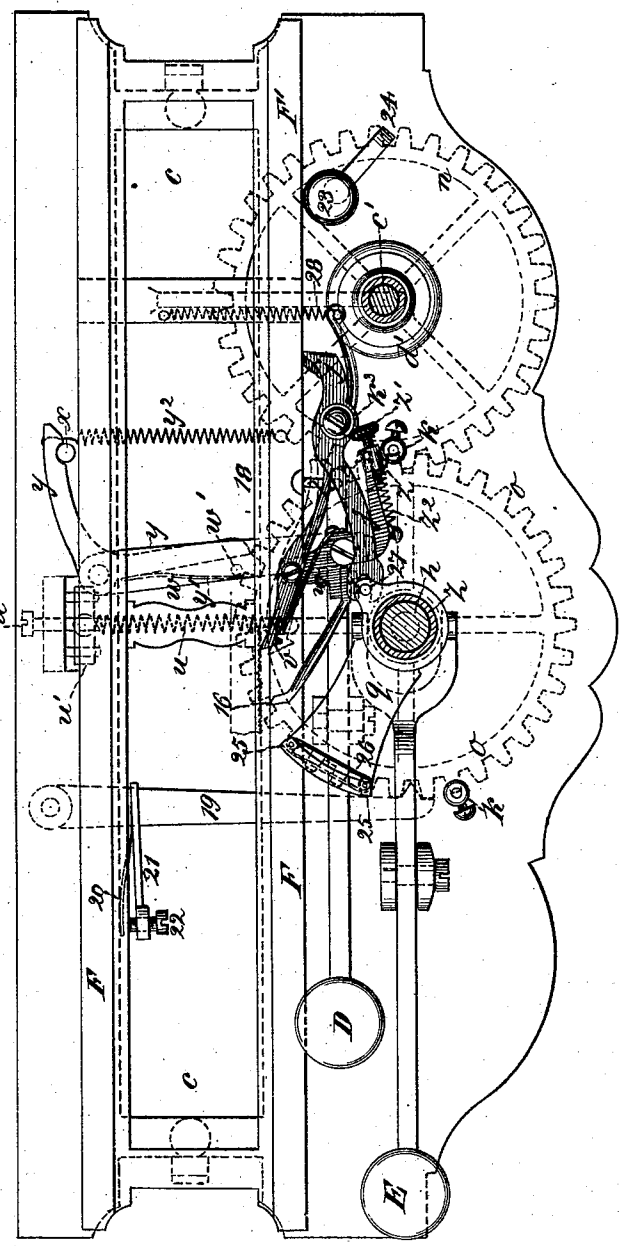

WITNESSES
John Becker
Jno. C. Davis

INVENTOR
Chas Spiro
by Chas. M. Higgins
Attorney

(No Model.) 6 Sheets—Sheet 4.

C. SPIRO.

TYPE WRITING MACHINE.

No. 352,160. Patented Nov. 9, 1886.

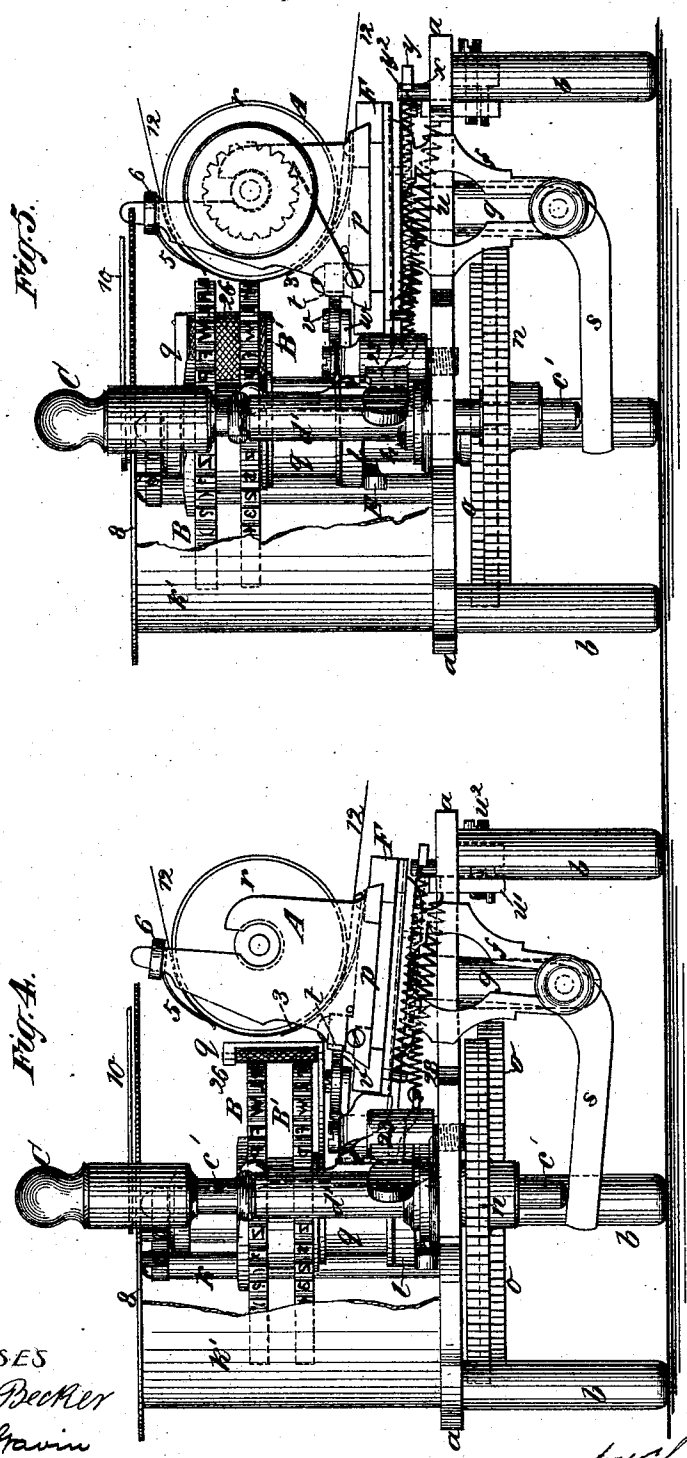

WITNESSES
John Becker
Jno. E. Gavin

INVENTOR
Chas Spiro
by Chas. M. Higgins
attorney.

(No Model.) 6 Sheets—Sheet 5.

C. SPIRO.

TYPE WRITING MACHINE.

No. 352,160. Patented Nov. 9, 1886.

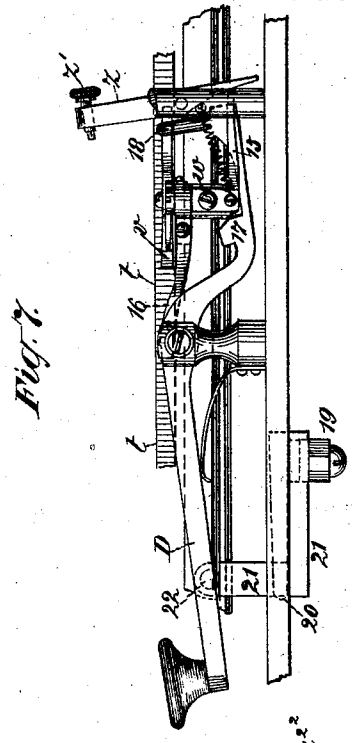

Fig. 7.

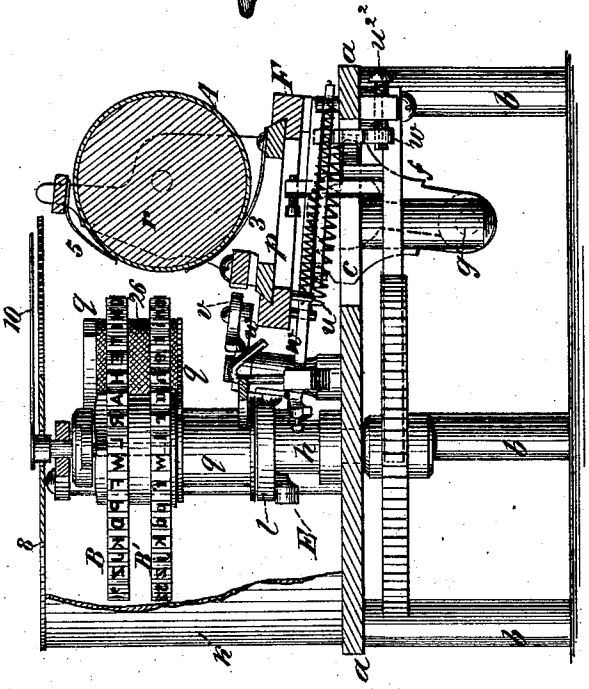

Fig. 6.

WITNESSES
John Becker
Jno. E. Ivain

INVENTOR
Chas Spiro
by Chas. M. Higgins
attorney

(No Model.) 6 Sheets—Sheet 6.

C. SPIRO.

TYPE WRITING MACHINE.

No. 352,160. Patented Nov. 9, 1886.

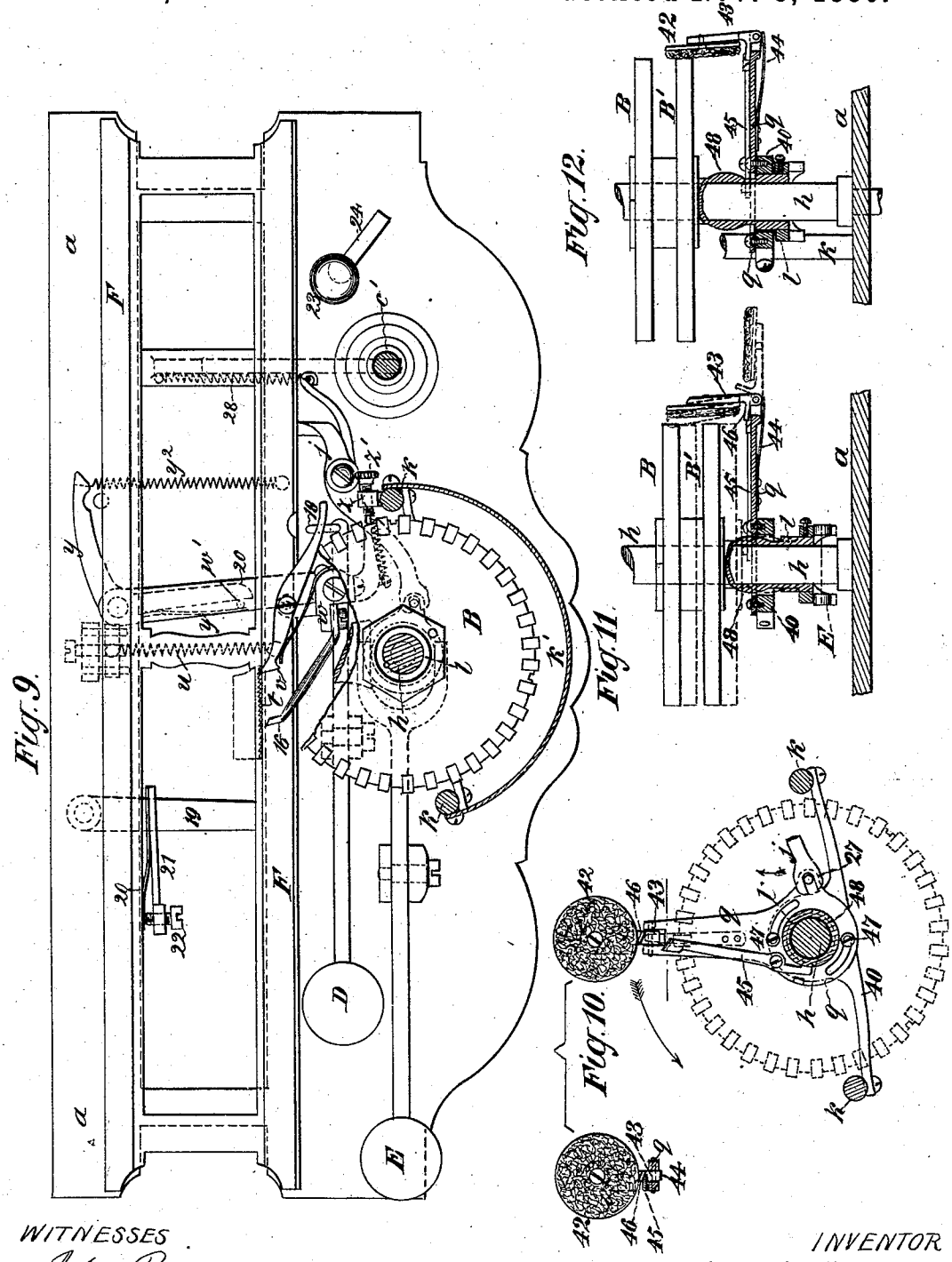

WITNESSES
John Becker
Jno. E. Havin

INVENTOR
Chas Spiro
by Chas. M. Higgins
Attorney.

UNITED STATES PATENT OFFICE.

CHARLES SPIRO, OF NEW YORK, N. Y.

TYPE-WRITING MACHINE.

SPECIFICATION forming part of Letters Patent No. 352,160, dated November 9, 1886.

Application filed February 17, 1885. Serial No. 156,156. (No model.)

To all whom it may concern:

Be it known that I, CHARLES SPIRO, of New York city, New York, have invented certain new and useful Improvements in Type-Writing Machines, of which the following is a specification.

My invention relates to that class of type-writers having a rotary type-wheel and a twirling-handle which is revolved to bring the desired type to the printing-point, and in which a reciprocating motion of the type wheel or carriage to or from each other effects the printing of the selected letter.

The chief aim of my present invention is to provide a type-writer with two or more distinct type-wheels, one wheel having, say, the small letters, and the other wheel or wheels having capitals or other characters, either wheel being capable of being thrown into action when desired, so that more perfect and elaborate printing may be thus accomplished.

In two former applications, Nos. 126,354 and 144,014, filed by me April 1, 1884, and September 26, 1884, the paper-carriage slides in a stationary bed, and the type-wheel is mounted with its axis horizontal on a depressible lever above the carriage, so that the type-wheel has both a rotary and reciprocating movement, it being rotated to select the desired letter and depressed against the paper-roller on the carriage to print the same.

Now, in my present invention the axis of the type wheel or wheels is stationary, and is preferably disposed in a vertical position, while the paper-carriage moves in a rocking or reciprocating bed, which is moved to and from the type-wheels to effect the printing action. The type-wheels are capable of being slid or shifted on their axis, and a manipulating-key is provided for thus shifting either wheel into action. A twirling-handle is also employed for operating the rotary type-wheels and the reciprocating carriage, said handle having a rotative engagement with the type-wheels and a reciprocative engagement with the carriage, or, rather, the rocking bed of the carriage, so that by twirling the handle the wheels may be rotated to bring the desired letter to the printing position, and by depressing said handle the carriage will be tilted against the wheel to print the said letter.

My present improvement therefore consists partly in the features above outlined and partly in the feeding mechanism employed for feeding the carriage step by step after the printing of each successive letter. This feeding mechanism is constructed on the same principle as that shown in my former applications—that is, it employs a reciprocating feed-pawl which engages a rack on the carriage, and is operated by the reciprocating movements of the printing device, and the length of the feeding strokes of the pawl is limited to correspond to the width of the letter printed by means of stops of variable length on the type-wheel corresponding to the variable widths of the types thereon. The special construction and arrangement of the feeding mechanism is, however, novel, to adapt it to the novel form of my present machine, as is hereinafter shown. My invention also embodies some improvements in the inking device, in the spacing-key device, in the dial or index, and in other details, as hereinafter fully set forth.

In the drawings annexed, Figure 1 presents a front elevation of my improved type-writer, shown in section in the region of the type-wheels and their operating mechanism. Fig. 2 is a plan view, with the stationary axis of the type-wheels in section and the type-wheels removed. Fig. 3 is a view similar to Fig. 2, but with the paper-carriage also removed, to better show the feed mechanisms. Fig. 4 is an end elevation with the parts in normal position, and Fig. 5 is a similar view with the twirling-handle depressed and the carriage tilted up against the type-wheel to print the selected letter. Fig. 6 is a cross-section on line *x x* of Fig. 2. Fig. 7 is a detail of the spacing-key and the feed devices. Fig. 8 is a plan view of the index-dial of the machine. Fig. 9 is a plan view like Fig. 3, showing the position of parts when the spacing-key is depressed for the spacing-feed. Figs. 10, 11, and 12 give detail views of the type-wheels and the preferred form of inking mechanism.

Referring to Figs. 1, 2, 3, and 4, *a* indicates the bed or table of the machine, which is supported on a number of short legs or feet, *b*, as seen best in Figs. 1 and 4. Along one side of the base is disposed the paper-carriage A, and on the opposite side of the base and at the center thereof are mounted the type-wheels B B′ and their adjuncts. At one side of the type-wheels the twirling or operating handle C arises from the base, and at the opposite side

projects the shifting-key E, for shifting the type-wheels, and the spacing-key D, for producing the independent spacing-feed. The side of the base beneath the carriage A is perforated with a long open slot or panel, *c*, above which is mounted a rocking frame or cradle, F, having dovetailed ways, in which the dovetailed base of the carriage is fitted, and is free to slide therein back and forth past the type-wheels, as will be readily understood from Figs. 2, 3, 4, and 6. The rocking bed or cradle F is mounted at each end on pendent arms *f f*, which are pivoted to posts *g g* below the base at each end of the open panel *c*, so that the cradle, with its carriage, is thus capable of rocking to and from the type-wheels to produce the printing action, as will be readily understood from Figs. 4 and 6, where the carriage and cradle are shown tilted away from the type-wheels, and from Fig. 5, where the carriage is shown tilted toward the type-wheel to receive the imprint of the selected letter.

The paper-carriage is composed of the usual parts shown in my former applications—viz., the dovetailed base or frame *p*, the paper-roller *r*, mounted thereon, the ratchet-rack *t*, which extends along the front edge of the base, the springs 3 3, pressing under the roller to support the paper thereagainst, and the similar springs 5 5, pressing against the top of the roller, to still further support and guide the paper, which latter springs are a new feature in this machine, and project from a bar, 6, extending over the top of the roller.

The type-wheels B B′, as shown best in Figs. 1 and 6, are preferably two, although more may be used, and they are disposed, as shown, in horizontal planes, one above the other, on a vertical axis. The type-wheels are simple metal disks, in the slotted peripheries of which metal types are soldered, and each wheel contains a distinct series or style of type—that is, the upper wheel, B, which is the one most used, contains the small letters and points of punctuation, while the lower wheel, B′, contains the capital letters and numerals, as shown by the index-dial in Fig. 8.

Referring now to Fig. 1, *h* indicates the axis or shaft of the type-wheels, which is journaled at the lower end in the base *a* and at the upper end in a cross-bar, *i*, which extends between two framing-posts, *k k*, which arise from the base on each side of the wheels, and which, together with a circular shield, *k′*, extending from post to post, inclose and protect the wheels, as best shown in Figs. 2, 4, 5, and 6.

The type-wheels B B′, as best seen in Figs. 1 and 6, are not mounted directly on the shaft or axis *h*, but on a sliding hub, *l*, which slides on said shaft. The hub and wheels are, however, engaged with the shaft by a pin, *m*, which projects from a collar, *m′*, fixed to the shaft, and passes down through holes in the type-wheels and hub, thus engaging the hub and wheels rotatively with the shaft, and yet allowing the hub and wheels to be slid up and down thereon, so as to shift either wheel into action.

Now, the twirling-handle C, as shown best in Fig. 1, is disposed vertically in a plane parallel with the axis of the type-wheels, and the spindle *c′* of the handle passes down through a fixed guiding-sleeve, *d′*, and projects below the base, where it is secured to a gear-wheel, *n*, which gears with a similar wheel, *o*, affixed to the lower end of the type-wheel shaft *h*, so that the twirling-handle has thus a rotative engagement with the type-wheels, whereby the same may be easily turned to bring the desired letter to the printing-point. A dial, 8, containing the different characters on the type-wheels, as shown in Fig. 8, is fixed above the type-wheels to the cross-bar *i*, as seen in Figs. 1, 4, 5, and 6, and an index-finger, 10, attached to the shaft of the wheels, projects over said dial and shows when the desired letter is brought to the printing-point, as will be understood.

Now, the twirling-handle C is not only free to revolve to turn the type-wheels, but is also free to reciprocate up and down, and is connected in this direction with the carriage, so as to move the same to or from the type-wheels to effect the printing of the selected letter. For this purpose the lower end of the shaft of the handle C rests on the extremity of an elbow arm or lever, *s*, which projects rigidly from the rocking base or cradle F of the carriage, as best shown in Figs. 4, 5, and 1; hence when the handle C is revolved or twirled between the fingers in one direction or the other, as indicated in Fig. 1, the type-wheels will be revolved to bring the desired letter to the printing position, and if the handle is now depressed the carriage will be tilted toward the type-wheels, as seen in Fig. 5, and the paper-roller thus forced against the selected type to print the same upon the sheet of paper 12 on the roller, as seen in Fig. 5. When the depressed handle is now allowed to rise, the carriage will be retracted or tilted from the type-wheels into its normal position (shown in Figs. 4 and 6) by a spring, *u*, one end of which is affixed to the inner edge of the cradle and the other end to an adjustable slide, *u′*, on the fixed base *a*, so that by adjusting a screw, u^2, affixed to said slide the tension of the retracting-spring may be adjusted as required.

Referring to Fig. 1, it will be seen that the teeth of the gear-wheels *n o* are sufficiently wide to allow the reciprocating movements of the handle C and its wheel *n* without carrying the wheels out of mesh.

Now, referring to Figs. 1 and 4, it will be seen that the upper type-wheel, B, which is the one almost constantly used, as it carries the small letters and punctuation-marks, remains normally in the printing position, as shown. The upper wheel, B, remains normally in this position, for the reason that both wheels, with their hub *l*, normally gravitate toward the base where the end of the hub rests on the forked end of the key-lever E, leaving the upper wheel, B, on a level with the middle of the paper-roller of the carriage, which is of course the printing plane or line of the machine, as

shown best in Figs. 1 and 4; hence, when the twirling-handle is operated without touching the key E, the upper wheel, B, will always be printed from, and the lower or capital wheel, B′, will remain out of action below the printing-line of the machine, as shown in Figs. 1 and 4. If, however, the knob of the lever E is depressed, then the hub *l* and its wheels B B′ will be slid up on the shaft, and the capital wheel B′ will be brought into the printing-plane, as shown in Figs. 5 and 6, so that capitals or numerals may now be printed instead of small letters, as before. When the key E is released, the wheels will fall back into their normal positions, and the small-letter wheel B will come into action as before; hence by this combination of wheels and their operating mechanisms much more elaborate and perfect printing can be accomplished, and greater beauty and variety may be given to the writing. Thus by touching the key E at any time that a capital is required to commence a word or sentence, or when it is desired to print a word all in capitals, these capitals will be accurately and neatly printed in proper place to contrast with the smaller letters printed from the wheel B, and this variety in the printing will be accomplished without any loss of time, for it will be seen that one hand will operate the handle C, while the other is free to operate the key E, and the movements of one will in no way interfere with those of the other, thus accomplishing a most desirable improvement in type-writers. Now, every time the handle C is reciprocated up and down to effect the rocking of the carriage and the printing of the letter a feed movement will be imparted to the carriage to advance it step by step for each successive letter, and these feed-steps will vary in length corresponding to the width of the letter printed, thus producing a regulated feed-spacing on the principle set forth in my former applications. By depressing the spacing-key D an independent feed movement will be imparted to the carriage to provide space between words or sentences, which space may be increased, as desired, by depressing the key two or more times, as is usual in type-writers.

Now, the automatic feeding mechanism above referred to is of such a nature as is difficult to simply illustrate and describe, and requires close attention for its elucidation, which will be now proceeded with.

Referring first to Fig. 3, *v* indicates the feed-pawl, which engages the rack *t* on the carriage. This pawl is pivoted at its middle on the pawl-lever *w*, which is in turn pivoted under the back edge of the cradle F, as well shown in Fig. 3, and hence rocks with the cradle. On the fulcrum-pivot of the pawl-lever *w* is also pivoted an elbow-lever, *y*, one arm of which bears upon a fixed pin, *x*, in the base *a*, and is constantly held against said pin by a spring, y^2, the end of which is connected to the opposite edge of the cradle, as shown in Figs. 3, 4, 5, and 6. The opposite arm of the elbow-lever *y* lies under the pawl-lever *w* and carries a spring-tongue, *y′*, while a pin, *w′*, projects from the elbow-lever *w*, and is embraced between the tongue *y′* and the elbow-lever *y*. It will therefore be seen that the elbow-lever and pawl-lever are engaged together by an engagement which is rigid in one direction and yielding in the other—that is, rigid in the direction in which the arm of the elbow-lever bears against the pin *w′*, and yielding where the spring *y′* bears against the pin. It will now be seen that when the cradle is rocked to tilt the carriage toward the type-wheels to print the letter the pawl-lever *w* will rock with the cradle, and by reason of the engagement of the elbow-lever *y*, which bears on the fixed base-pin *x*, the pawl-lever *w* will be caused to move in an arc tangent to the rack *t*, and will hence slip the pawl *v* back over the rack-teeth, as indicated in Fig. 3. Now, in this direction of motion the engagement of the two levers *w y* is yielding by reason of the spring *y′* bearing on the pin *w′*; but if the pawl-lever meets with no obstruction in this back movement there will be no yield, as the lever and pawl will be moved back the full distance, and the spring *y* will not be flexed, so that the pawl will therefore slip back over four or more teeth on the rack, or sufficient to produce a full feed movement equal to the widest letter on the type-wheel. Now, when the cradle rocks up and tilts the carriage away from the type-wheels, the levers *w y* will swing forward, the pawl *v* will engage the teeth of the rack, and the engagement of the two levers being rigid in this direction, as described, a positive forward feed movement will be imparted to the carriage equal to the distance which the pawl slipped over at the first or back motion. If, however, during the back motion of the pawl and levers, the lever *w* were obstructed or stopped after the pawl had slipped over one, two, or three teeth, then the spring *y* would flex, to allow the elbow-lever *y* to make the remainder of its sway idly, as shown in Fig. 3, while the pawl and lever *v w* remained stationary at the point at which they were obstructed. Therefore, on the return or forward stroke of the parts, the elbow-lever *y* would first take up the idle play between itself and the pin *w′*, (see Fig. 3,) which play would equal the residual number of teeth which the pawl did not slip over, and then, coming in contact with the pin *w′*, the pawl-lever and pawl would be moved rigidly forward during the remainder of the stroke, thus imparting a positive feed motion to the carriage equal to two or more teeth of the rack, according to the extent to which its back motion was obstructed, as will be understood. Now, the obstruction of the back motion of the pawl-lever is determined by a stop-lever, *z*, (shown best in Figs. 1 and 7,) whose positions are in turn determined by variable stops on the type-wheel corresponding to the variable widths of the types thereon on the principle shown in my former applications. This stop-lever is piv-

oted on one of the posts k, and one of its arms projects down toward the base, while the other arm projects up toward the type-wheels, and is provided with an adjusting-screw, z', the tip of which is on a level with the rim of the active type-wheel, and is adapted to enter recesses or spaces between the types. A pin or projection, 15, extends from the pawl-lever toward the lower arm of the stop-lever z, and the two are also connected by the spring z^2, so that hence every time the pawl-lever is moved backward it will sway the stop-lever z and cause the screw z' on its tip to enter one of the recesses between the types on the rim of the type-wheel, as best seen in Fig. 9. Now, these recesses vary in depth (see Fig. 9) according to the variable width of the types, as shown in my former application; hence it will be seen that every time the pawl-lever w is moved back it will be obstructed sooner or later in its stroke by the action of the stop-lever z encountering a recess corresponding to the letter printed, so that the feed-pawl will thus take in a varying number of teeth, and at the next forward movement will feed the carriage forward this number of teeth to correspond to the width of this letter, thereby providing an automatically-regulated spacing in the printing of the letters, as will be readily understood from the description and illustration given.

Referring to Figs. 1 and 2, it may be seen that the pawl-lever w also carries a long rigid detent-tooth, 16, which, when the lever has swung fully forward, will engage one of the rack-teeth and hold the carriage firmly from movement in either direction by momentum or otherwise. This detent-tooth is of course always withdrawn as soon as the lever moves back, as seen in Fig. 3.

To produce the independent spacing-feed, the key D is depressed, as before described, and this key, being operatively connected with the pawl-lever, as shown best in Figs. 2 and 7, will operate the feeding mechanism to produce the desired movement.

Referring to Fig. 7, it will be seen that the key-lever D has a projection, 17, which bears upon the end of the pawl-lever w and carries at its extremity an upwardly-projecting hook or cam, 18, which approaches the tail of the pawl v, as shown well in Figs. 2, 6, and 7. When, therefore, the key D is depressed, as seen in Fig. 7, the pawl-lever will be moved back and the pawl will slip over the teeth, and as in this direction the pin w' will be forced against the lever y, (see Figs. 2 and 9,) the outer arm of the lever y will be moved away from the stop-pin x, and the spring y^2 will therefore be stretched, as shown in Fig. 9. When, therefore, the key D is released, the spring y^2, reacting, will move the pawl-lever and pawl forward, and thus feed the carriage forward the full space of one feed-stroke, thus giving the desired feed.

When the key D is fully depressed, as shown in Figs. 7 and 6, the hook 18 will be forced against the tail of the pawl v, as shown in Fig. 6, thus withdrawing the pawl from the rack, and enabling the carriage to be freely shifted back or forth to any desired position in its guides. When the key is released, the pawl engages the rack as before, as will be readily comprehended.

Referring to Figs. 2 and 3, I prefer to make the gear-wheels n o with a number of teeth equal to the number of characters on the type-wheels, and I arrange a spring click-lever, 19, to engage the periphery of the gear-wheel o, so that the point of the click-lever, falling between the teeth of the gear-wheel, will assist the hand in turning the type-wheel to the desired letter, and prevent the wheel from easily shifting when the letter is brought to the printing-point. When, however, the handle is depressed to print the letter, the click-lever is rigidly held against the wheel, which is thus locked to prevent the motion of the type-wheel during the printing action. This locking action is accomplished as follows: The lever 19 is pivoted to the base a, beneath the same, and to it is attached a spring, 20, which bears upon the edge of the base, as shown by full and dotted lines in Figs. 2 and 3, and thus tends to keep the point of the lever constantly pressed into engagement with the teeth of the wheel. To the lever 19 is also attached a rigid arm, 21, carrying at its tip a set-screw, 22, which projects toward the edge of the carriage-cradle, as shown in Figs. 2 and 3. Now, when the cradle is rocked up and the carriage tilted away from the type-wheels, as shown in Fig. 2, the spring 20 will still press the lever 19 against the gear-wheel o, and will also yield to allow the lever to click over the teeth as the gear-wheel is revolved, as indicated by dotted lines in Fig. 2. As soon, however, as the desired letter is brought to the printing-point, the click-lever will spring into engagement with the appropriate tooth to hold the wheel, and as soon as the carriage is now tilted toward the type-wheels to print this letter the edge of the carriage-cradle will be brought rigidly against the tip of the screw 22, as shown in Fig. 3, and will thus rigidly lock the click-lever 19 against the wheel o, thereby locking the type-wheels against rotation while the letter is being printed. When the carriage is tilted against the type-wheel to print, as before described, the front edge of the carriage-cradle strikes against a stop, 23, on the base, (see Figs. 1, 2, 3, and 4,) which limits the imprinting motion of the carriage. This stop 23 is an eccentric rotary pin rotating in a socket in the base, and provided with a handle, 24, as shown, so that by turning this stop-pin more or less one way or the other the imprinting movement of the carriage may be more or less limited, and the impression of the types thus regulated, as may be desired.

The inking mechanism which I employ is on the principle shown in my former application, but modified to suit the present arrangements, and is best seen in Figs. 1, 2, 3, and 4.

q indicates a vibrating radial arm, having at its inner end a hub or sleeve, which encircles the hub *l* of the type-wheels, and is free to partly revolve or oscillate thereon about the axis of the wheels. At the outer end this oscillating arm carries two small vertical rollers, 25, over which passes an endless inking-band, 26, which runs against the typed rim of the type-wheels, as best shown in Figs. 4, 2, and 3, and hence as the wheels are revolved against the band the band will also revolve against the wheel, and thus properly ink the types. In order to make the inking more effective, an oscillating motion is imparted to the inker-arm at each reciprocation of the carriage by means of a lever, *j*, pivoted on the stud k^3, one arm of which engages with a crank-pin, 27, on the hub of the inker-arm, while the other arm of the lever bears upon the edge of the carriage-cradle, as shown in Figs. 2, 3, and 4. A retracting-spring, 28, connected at one end with the lever *j* and attached at the opposite end to the carriage-cradle, tends constantly to keep the lever pressed against the edge of the retracted cradle, as seen in Fig. 2, and to swing the inker around into its normal position, where the inking-band is before the printing-point, so as to be sure to ink the letter which is selected before the imprinting motion takes place. As soon, however, as the imprinting motion takes place by the rocking forward of the cradle and the tilting of the carriage toward the type-wheels, the movement of the edge of the cradle against the lever *j* causes said lever to be swayed, and to consequently swing the inker partly around the wheels away from the printing-point, as shown in Fig. 3, thus removing the inker from in front of the selected letter after the same has been effectually inked, thus enabling the carriage to come up to the wheel to take the impression of the inked letter, as will be readily understood. When the carriage is again tilted away from the type-wheels, the inker is automatically swung back into its normal position, as shown in Fig. 2, thereby insuring by said movements a perfect inking of the types.

In lieu of the inking mechanism just described I greatly prefer to employ that shown in Figs. 10, 11, and 12, as this is more perfect in action and more convenient to manage. Fig. 10 shows a plan view of the type-wheel and the inking device. Fig. 11 gives an end elevation with the inker at the printing-point of the wheels and the wheels partly raised up out of their normal position. Fig. 12 is a similar view, with the wheels fully raised to bring the lower or capital wheel into action. In this mechanism the inker does not move up and down with the wheels when the same are shifted, as the inker-arm *q* is mounted on a fixed bracket or cross-bar, 40, which extends crosswise beneath the wheels, and is fixed to the posts *k k*. This bracket has a central opening, through which the hubs of the type-wheels pass, and the inker-arm *q* has a similar central opening to loosely encircle the hub, as shown well in Figs. 10, 11, and 12. The inker-arm *q* is held on the bracket 41 by two screws, 47, which pass through curved slots in the arm, and thus permit the arm to vibrate or oscillate around the axis of the type-wheels. The inker-arm is provided with the crank-pin 27, as before described, and is engaged with the lever *j*, so that every time the carriage is reciprocated the arm is vibrated with the same effect as already described. Now, instead of the inking band and rollers before described, I mount on the end of the arm *q* a single ink-disk or flat roller, 42, which revolves flatwise against the type-wheel. This disk 42 is pivoted on a short arm, 43, which is hinged or jointed to the end of the inker-arm, and the hinged end is pressed upon by a spring, 44, in the manner of a knife-blade, thereby tending constantly to force the ink-disk toward the rim of the wheels in an inclined position, so that the upper edge of the disk presses against the active type-wheel and is free to revolve against the same to ink the types effectually, while the lower part of the disk is out of contact with both wheels, thus applying the ink only to the wheel which is in action. Now, when it is desired to replenish the ink on the disk, it is only necessary to swing or press the disk backward on its hinge against the stress of the spring 44, as shown in full lines in Fig. 10 and dotted lines in Fig. 11, thus freely exposing the surface of the disk to receive the ink, which can be very conveniently applied thereto, after which the disk is swung back in its place, and the spring 44 will hold it against the wheel, as shown in Figs. 11 and 12. The inking-disk is preferably made of an outer disk of metal covered with an inner disk of felt to hold the ink and contact with the types. As before stated, this inking device always remains at the same level, and does not move up or down when the type-wheels are shifted, but always bears on the wheel which is in action, as fully illustrated in Figs. 11 and 12. In order, however, to prevent the rim of the wheels from wedging or catching in the inclined face of the disk when the wheels are shifted up or down, the sliding hub of the wheels is arranged to actuate a lever to press the disk slightly away from the wheels during the shifting motion, and allow it to come back when the wheels come into position. To accomplish this action, the hub of the wheels is made with a spherical bulge, 48, as seen best in Figs. 11 and 12, and on the arm *q* is pivoted a small lever, 45, the short arm of which projects against the bulge, while the long arm extends toward the ink-disk, and is terminated with a wedging or inclined tip, which engages a corresponding incline or wedge, 46, on the hinged arm 43 of the disk. It may now be seen that when the hub *l* is slid up to shift the upper wheel out of and the lower wheel into action, as seen in Fig. 11, the bulge 48 will press against the lever 45 and sway its wedging end against the wedging face on the hinged arm 43,

and thus press the disk slightly outward away from the wheels and permit them to shift without scratching or catching in the disk. When the wheels are fully shifted up, as seen in Fig. 12, the bulge will have passed above the lever 45, and will thereby allow the disk to spring back in its place against the wheel. It will be readily seen that the same action will take place when the wheels are shifted down into their normal position to bring the upper wheel to the printing position, in which case the disk 42 will be swung slightly outward to prevent the upper wheel from catching against its edge, and after the bulge 48 passes below the lever 45 the disk will again spring back in proper contact with the rim of the wheel, as will be readily understood from the description and illustration already given.

I prefer to arrange the letters on the type-wheels in the order shown in Fig. 8, or similar to the arrangement of type in a printer's case. This brings the letters most used within a short arc on the dial and enables much more rapid work to be accomplished, as no unnecessary time is wasted in needlessly wide movements to reach and select the letter.

I lay no claim, broadly, to the combination of a movable paper-carriage with a rocking frame in which the same slides, and a rotary and reciprocating handle geared with the type-wheel.

What I claim is—

1. The combination, with the reciprocating paper-carriage and the rotary type-wheel having stops of varying length corresponding to the width of the letters, of the feed devices consisting of the levers y w, spring y', stop w', and pawl v, stop x', and spring y^2, with a rack on the carriage and an interposed obstructive connection between the pawl-lever and the stops on the type-wheel, arranged and operating substantially as set forth.

2. The combination, with the reciprocating carriage having a feed-rack, of the feed devices consisting of the finger-key E, pawl-lever w, pawl v, elbow-lever y, spring y', stop w', with the stop x and spring y^2, arranged and operating substantially as and for the purpose set forth.

3. In a type-writer, the combination, with the paper-carriage and its rack, of the spacing-key lever E, pawl-lever w, pawl v, and the hook or stop 18 on the lever E, to withdraw the pawl, substantially as and for the purpose set forth.

4. The combination, with the type-wheel having variable stops, and the sliding feed-carriage having a ratchet-rack, of the feed devices consisting of the levers w y, connected as described, the pawl v, with the stop-lever z, operated by the pawl-lever, and its pin z', arranged to encounter the stops on the type-wheel, substantially as shown and described.

5. In a type-writer, the combination, with the type-wheel, of an inking device consisting of an inking-disk revolving against the rim of the type-wheel in a plane at right angles thereto, or nearly so, and pivoted on a hinged arm adapted to be swung out and overturned to permit reinking of the disk, substantially as set forth.

6. In a type-writer, the combination, with the type wheel or wheels, of a vibrating arm, q, extending radially from the axis of the wheel, an arm, 43, hinged on the end thereof, and a rotary ink-disk pivoted on said hinged arm and contacting with the rim of the type-wheel, substantially as and for the purpose set forth.

7. The combination, with a reciprocating paper-carriage and a rotary type-wheel, of the inking-disk 42, revolving against the rim of the wheel and carried on a radial vibrating arm radiating from the axis of the wheel and connected with the reciprocating carriage, substantially as set forth, whereby the ink-disk is swung partly around the wheels at each printing action.

8. The combination, with a type-wheel, of the vibrating inker-arm q, hinged arm 43, spring 44, and ink-disk 42, arranged and operating substantially as set forth.

9. The combination, in a type-writer, with two type-wheels arranged to be shifted to or fro to bring either wheel into the printing-line, of an inking-disk fixed or mounted at the printing-line, and arranged to rotate flatwise against the rim of the wheel at this line in a position inclined thereto and with one edge in contact therewith, whereby the disk contacts only with the wheel which is at the printing-level, substantially as herein shown and described.

10. The combination, with the type-wheels B B′ and their sliding hub l, having the bulge 48, of the vibrating inker-arm q, hinged arm 43, ink-disk 42, and the lever 45, engaged at one end with the hub and at the other with the hinged arm 43, substantially as and for the purpose set forth.

11. The combination, with the rotary type-wheel and the reciprocating cradle F and its carriage A, of the vibrating inker-arm q, the ink-disk 42, carried thereby, and the operating-lever j, engaged with the inker-arm and cradle, and the spring 28, for retracting the lever, substantially as herein shown and described.

12. The combination, with the reciprocating carriage and the rotary type-wheel, of the toothed wheel o, the locking click-lever 19, the arm 21, and spring 20, arranged and operating substantially as set forth.

CHAS. SPIRO.

Witnesses:
J. FREUDENTHAL,
JULIUS E. LEVY.