Feb. 24, 1970 D. L. GRULLER ET AL 3,497,243

PIPE SUSPENSION APPARATUS

Filed Jan. 5, 1966 4 Sheets-Sheet 1

Fig. 1

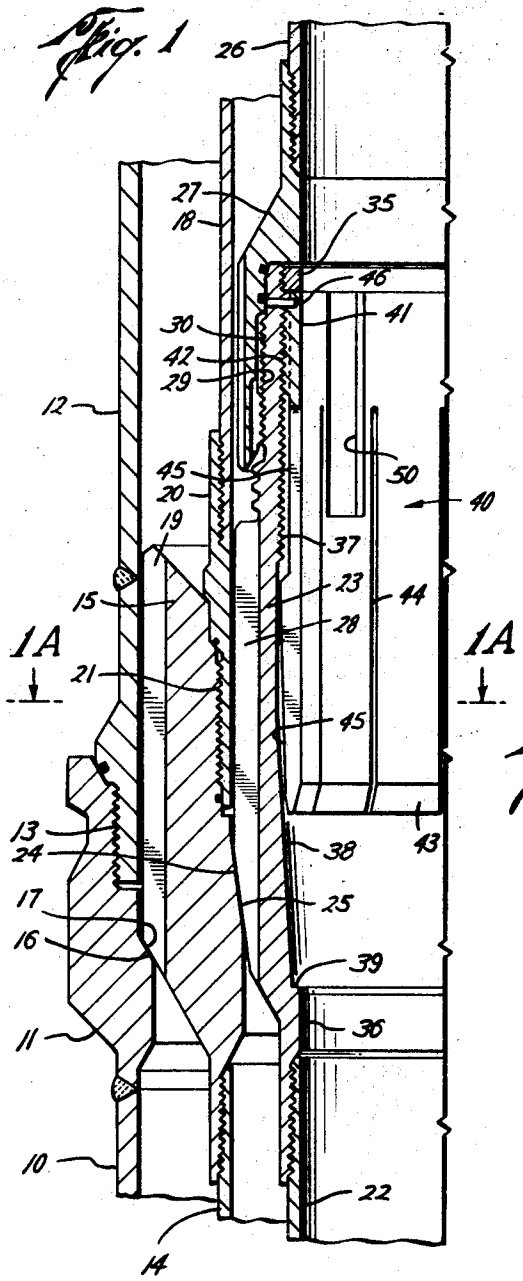

Fig. 2

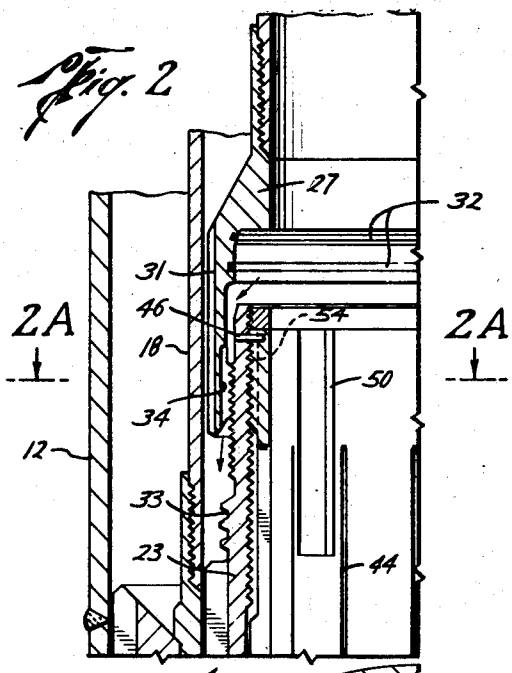

Fig. 2A

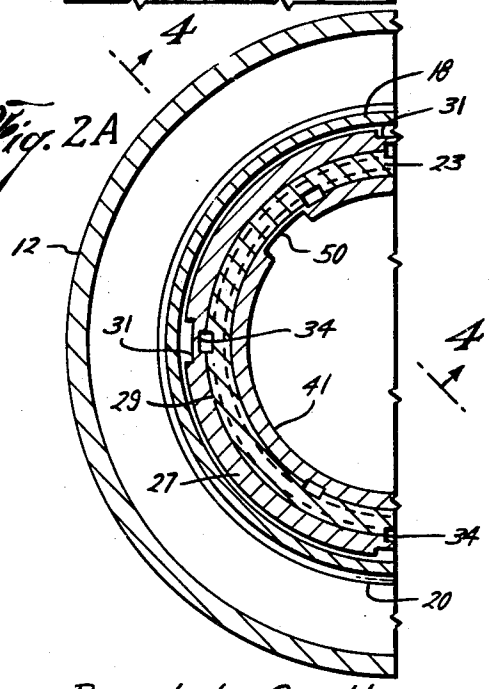

David L. Gruller
Leonard E. Williams
INVENTORS

BY
Browning, Bennett, Hyer & Eichenroht
ATTORNEYS

PIPE SUSPENSION APPARATUS

Filed Jan. 5, 1966 4 Sheets-Sheet 2

Fig. 1A

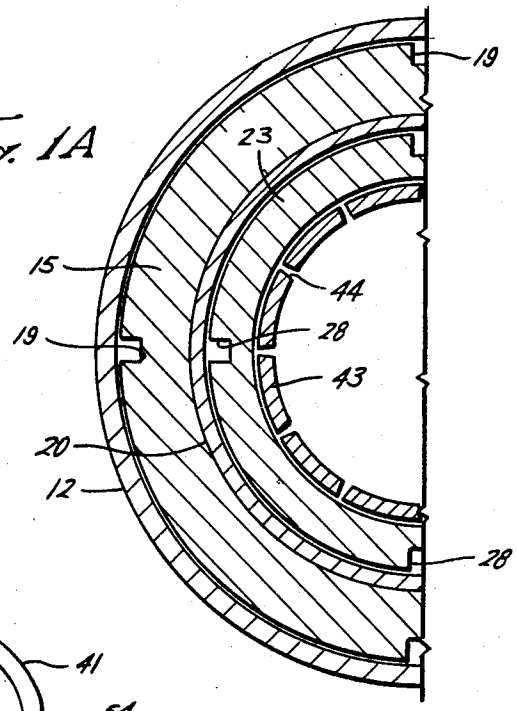

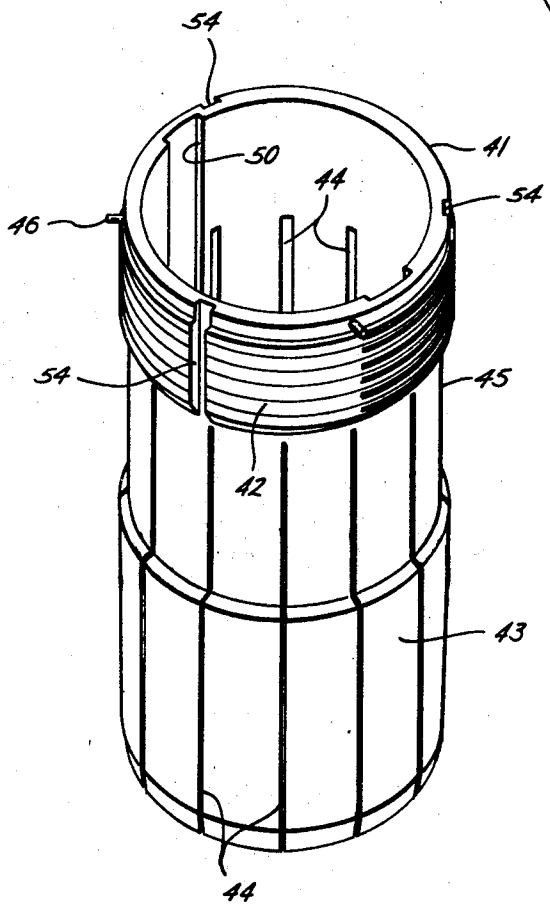

Fig. 3

David L. Gruller
Leonard E. Williams
INVENTORS

BY
Browning, Simmons, Hager & Eichenroht
ATTORNEYS

PIPE SUSPENSION APPARATUS

Filed Jan. 5, 1966 4 Sheets-Sheet 3

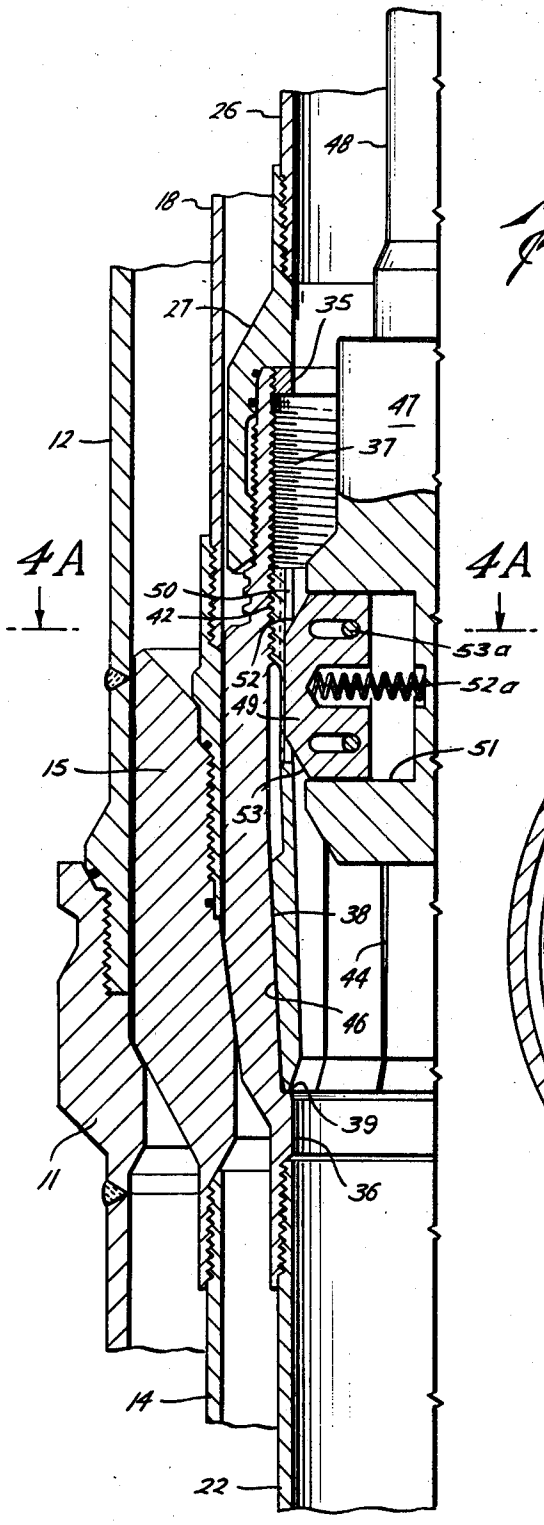

Fig. 4

Fig. 4A

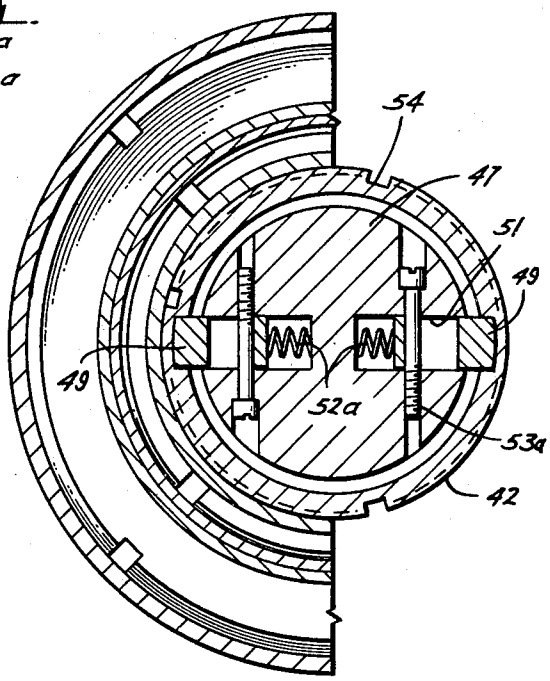

David L. Gruller
Leonard E. Williams
INVENTORS

BY
Browning, Simms, Hyer & Eickenroht
ATTORNEYS

PIPE SUSPENSION APPARATUS

Filed Jan. 5, 1966 4 Sheets-Sheet 4

Fig. 5

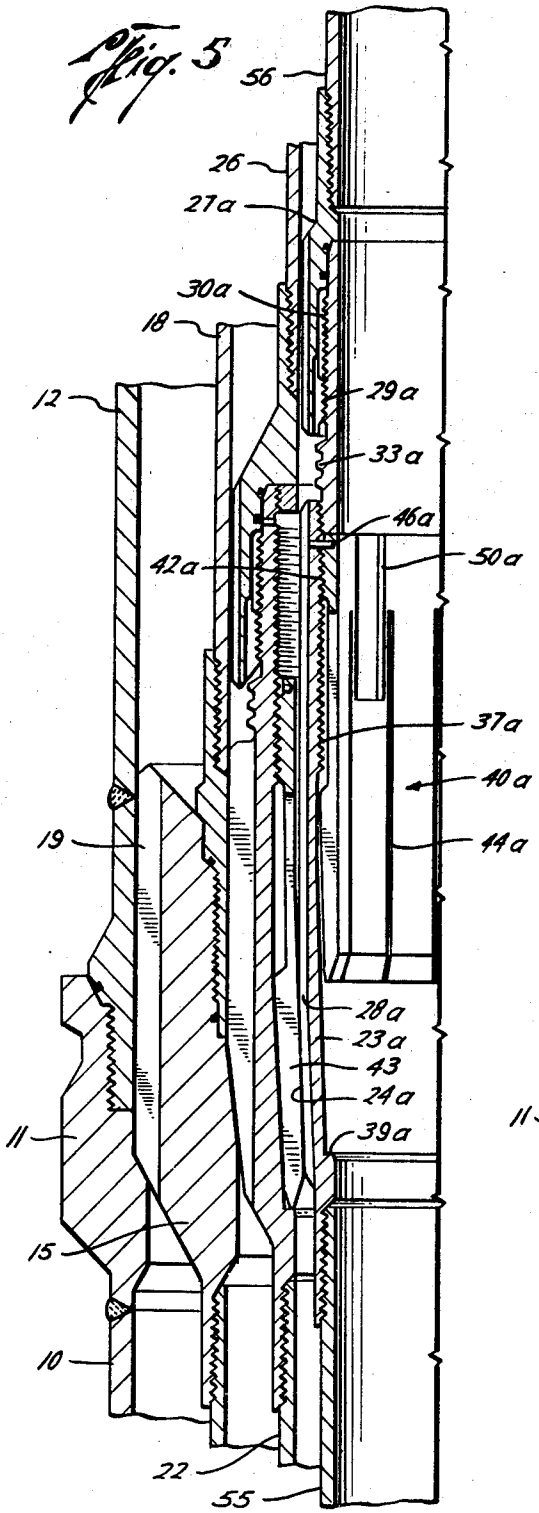

Fig. 6

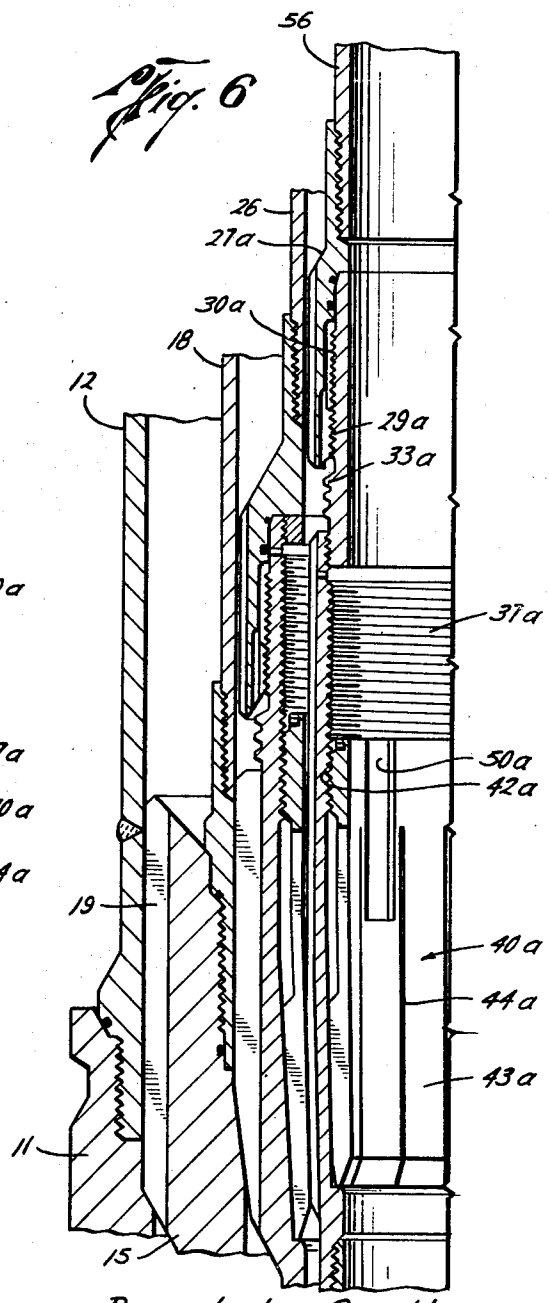

David L. Gruller
Leonard E. Williams
INVENTORS

BY
Browning, Jenner, Hyer & Eickenroht
ATTORNEYS

United States Patent Office

3,497,243

Patented Feb. 24, 1970

1

3,497,243

PIPE SUSPENSION APPARATUS

David L. Gruller and Leonard E. Williams, Houston, Tex., assignors to Cameron Iron Works, Inc., Houston, Tex.

Filed Jan. 5, 1966, Ser. No. 518,580
Int. Cl. F16l 37/00, 35/00
U.S. Cl. 285—3 12 Claims

ABSTRACT OF THE DISCLOSURE

Apparatus for suspending one or more concentric pipe strings at a level within a well intermediate the wellhead and the lower ends of such strings, comprising an annular body having means on its upper and lower ends for connecting it as a part of such pipe string and a seat on its outer side for landing it within a casing string of the well. At least one flowway in the annular body connects at its opposite ends above and below the seat for cement returns when the annular body is landed in the casing string. There is a recess in the bore of the annular body having a downwardly and inwardly tapering surface and an annular seat means is movable vertically within the recess. The seat means includes circumferentially separated segments which slide downwardly and inwardly over the tapering surface of the recess upon movement of the seat means from an upper to a lower position. These segments define an opening in the upper position of the seat means to pass a drill string therethrough and an upwardly facing seating surface in the lower position of the seat means to provide a support for a hanger body connected as a part of an inner pipe string as the latter is lowered into the outer pipe string.

This invention relates to apparatus for suspending concentric pipe strings within a well. More particularly, it relates to improved apparatus for suspending such strings at a level intermediate the wellhead and the lower ends of such string.

Apparatus of this latter type is useful in the drilling of offshore wells in which each casing string is suspended at a level near a formation capable of carrying its weight and then extended upwardly to the wellhead located on a platform at water level. These upwardly extending portions of the casing strings, which may be several hundred feet long, are in turn suspended from the wellhead by conventional means comprising conically shaped hanger bodies seated upon correspondingly shaped shoulders in the casing head. In the drilling of an offshore well with this type of apparatus, cement returns are circulated upwardly past the intermediate suspension of the casing strings to the wellhead at water level.

After the well is tested and plugged, the platform including the wellhead equipment is removed for use at another location, the casing extension strings are backed off and retrieved from above the intermediate suspension level, and the well is capped. When it is desired to complete the well, the cap is removed and the extension strings are lowered back into place and reconnected to the casing strings suspended at the intermediate level.

In the drilling of a well, the operator runs as large a bit as possible through at least the long strings of casing. For this reason, the lower section of the casing string from the intermediate suspension level on down must be free of obstructions. At the same time, it is most desirable that the casing extensions be of the same size as the lower sections of casings to which they are connected. For one thing, a larger size would require larger pressure control equipment at the wellhead, at least during running of the casing extensions. Also, larger casing has lower pressure ratings than smaller casing. Thus, it

2

has not been the practice to suspend the casing strings from these intermediate levels by conventional means, such as the previously described conically shaped hanger bodies which, of course, require a corresponding shaped obstruction upon which to seat.

Instead, it has been proposed to suspend the intermediate portions of the casing strings by means of latches or dogs adapted to land within recesses formed in specially prepared annular bodies connected as intermediate parts of the next outer casing strings. Normally, these latches are retracted as the inner casing string is run into the well and then expanded outwardly into the recesses by means of springs, cams or the like.

The main difficulty with this sort of suspending apparatus is its unreliability. Thus, after running the casing string on which the latches are carried, the operator may find it impossible to expand the latches into the recesses. This may be due to a purely mechanical failure, although drilling mud or other debris often fills the recess to such an extent as to prevent adequate expansion of the latches. Even when fully expanded, these latches have low load capacity.

Also, of course, these latches are expensive to manufacture.

An object of this invention is to provide apparatus which, similarly to that above-described, does not require an obstruction within the outer casing string during drilling therethrough, but which, on the other hand, overcomes the shortcomings of such latch-type apparatus.

Another object is to provide such apparatus in which the inner string is suspended by means of a more or less conventional hanger body connected as an intermediate part of the inner string and having a downwardly facing seating surface for landing upon a correspondingly shaped seat in the outer casing string.

Still another object is to provide apparatus of the type described in the foregoing objects which is reliable in operation, inexpensive to manufacture, and has high load capacity.

These and other objects are accomplished, in accordance with the illustrated embodiment of the invention, by apparatus which includes, for use with such a hanger body for the inner string, an annular body connectible as an intermediate part of the outer string and having an inwardly and downwardly tapering surface within a recessed portion of its bore. An annular seat means is movable between vertically spaced apart positions within the recess and includes circumferentially separated segments which are caused to slide downwardly and inwardly over the tapering body surface upon movement of the seat means from its upper to its lower position. In the upper position of the seat means, the segments define an opening to pass the drill string therethrough, while, in their lower positions, they define an upwardly facing seat to provide a support for the hanger body on the inner string.

More particularly, in their upper positions, these segments define a minimum internal diameter through the seat means which is no less than the minimum internal diameter through the bore of the annular body. Thus, in such positions, they will pass the maximum size of drill string which will pass the annular body. However, upon completion of drilling through the outer string and movement of such segments to their lower positions, they define a seat having a minimum internal diameter less than the minimum internal bore diameter.

The seat means is releasably connected to the annular body for normally holding such seat means in its upper position, so that it will not be accidentally displaced to its lower position during the drilling operation, as might occur due to engagement of the drill string or other elements with the seat means. In the illustrated embodi-

ment of the invention, this connecting means comprises at least one shear pin between the annular body and the seat means.

In its preferred form, the seat means comprises a generally tubular member having an upper cylindrical section to which the shear pin is connected and being slotted about its lower end to define the circumferentially separated segments. The outer surfaces of such segments are so formed relative to the tapering surface within the bore as to facilitate swedging of the segments down along such surface. When the segments are so swedged, their inner faces define a downwardly and inwardly tapering surface so as to provide a maximum of seating area for a correspondingly downwardly and inwardly tapering surface on the hanger body for the inner string. The downward movement of the seat means is limited by a shoulder on the seat means abutable with a shoulder on the annular body prior to circumferential engagement of the segments with one another.

Upon completion of the drilling operation and prior to landing of the hanger body for the inner string, the seat means is released from its normal connection to the annular body by means of a tool which is lowerable into the outer pipe string for engaging the seat means, whereby it may be moved to its lower position. In the illustrated embodiment of the invention, the cylindrical portion of the seat means has threads about it for engaging with threads on the recessed bore of the annular body. More particularly, there is at least one vertical groove on the bore through the seat means with which an outwardly urged dog on the operating tool is engageable so as to permit such tool to impart torque to the seat means. This torque not only shears the pins so as to disconnect the seat means from the annular body, but also threads such seat means down in the body recess. There are sufficient threads on the body bore to maintain this threaded engagement throughout the entire range of movement of the seat means so that such seat means is at all times engaged with the annular body. Thus, this threaded engagement not only maintains the seat means in its upper position against accidental shearing of the pin, but also maintains it against accidental displacement upwardly from its lower position and enables the seat means to be move upwardly from its lower back to its upper position by reverse manipulation of the operating tool.

In the drawings wherein like reference characters are used throughout to designate like parts:

FIG. 1 is a longitudinal sectional view of one-half of an inner casing string suspended at an intermediate level within concentric outer strings of a well of the character described and including an annular body having seat means mounted therein which are constructed in accordance with the above-described embodiment of the invention for use in suspending the next innermost casing to be run into the well, such seat means being disposed in its upper position to pass a full gauge drill string therethrough;

FIG. 1A is a cross sectional view of the casing strings shown in FIG. 1 including the annular body and seat means connected as an intermediate part of the inner string, and as seen along broken line 1A—1A of FIG. 1;

FIG. 2 is a view similar to FIG. 1 but showing a connector which connects the annular body with the upwardly extending portion of the inner string moved to a position in which cement or other debris may be washed from threads about the body to which the extension string may be subsequently connected upon completion of the well;

FIG. 2A is a cross sectional view of the casing strings including the connector, annular body and seat means, as seen along broken line 2A—2A of FIG. 2;

FIG. 3 is a perspective view of the seat means removed from within the annular body;

FIG. 4 is a longitudinal sectional view of the casing strings, as seen along broken line 4—4 of FIG. 2A, and showing seat means lowered from its upper position to its lower limited position by an operating tool lowered through the inner casing extension into engagement with the seat means;

FIG. 4A is a cross-sectional view of the casing string with the operating tool in place, as seen along broken line 4A—4A of FIG. 4;

FIG. 5 is another view similar to FIGS. 1 and 2, upon removal of the operating tool from within the inner casing and lowering and suspension of the next innermost casing string within the well by means of a hanger body connected as an intermediate part thereof and supported upon the lowered seat means shown in FIG. 4; and

FIG. 6 is a view similar to FIG. 5, but in which a seat means mounted on the hanger body of such next innermost casing string has been lowered from its upper to its lower position so as to provide a downwardly and inwardly tapering surface upon which a hanger body connected to a still further innermost casing string may be supported.

With reference now to the details of the above-described drawings, an outermost conductor casing **10** is connected at its upper end to a head **11** which comprises an annular body landed near a competent formation at an underwater level of an offshore well. More particularly, the conductor casing and thus the head **11** are secured in place by a cement column (not shown) extending upwardly within the annular space between the casing and well bore. An extension **12** of the casing string **10** is threadedly connected at **13** to the upper end of the head **11** for extension upwardly to suspension from the conventional wellhead (not shown) located on the drilling platform at the water level As will be noted from the drawings, the extension string **12** is of the same size as the downwardly extending conductor casing string **10**.

Upon drilling of the further hole through the conductor casing, an intermediate casing string **14** is lowered into the well bore and then suspended at the level of casing head **11** by means of an annular hanger body **15** having a downwardly and inwardly tapering surface thereabout for seating upon a correspondingly shaped surface **17** on the bore through the head **11**. As shown in FIG. 1, the lower end of hanger body **15** is threadedly con nected to the upper end of intermediate casing string **14**, and an extension **18** of casing string **14** is threadedly connected to the upper end of the body **15** for extension upwardly to suspension from the previously described wellhead at water level. This extension is of the same size as the casing string **14**.

Upon suspension of the intermediate casing, it is secured in place by a further cement column within the annular space about it. Returns of this cement are circulated upwardly to the wellhead at water level by means of flowways **19** formed about the outer surface of hanger body **15** to connect the annular space about string **14** beneath such body with the annular space between casing extensions **12** and **18**. The lower end of the extension string **18** is connected to hanger body **15** by a tubular connector **20** having its upper end threadedly connected to the lower end of the extension string and its lower end threadedly connected at **21** to the upper end of hanger body **15**. Threads **13** and **21**, which may be left hand, provide releasable connections between the casing string extensions **12** and **18** and the bodies **11** and **15**, respectively. This enables such extension strings to be backed off at the intermediate level when the well is to be capped.

Upon drilling of still further hole within the well bore, another casing string **22** is run through the intermediate casing string **14** and extension **18** and suspended therein by means of a hanger body **23** having an outer downwardly and inwardly tapering surface **24** seatable upon a correspondingly shaped surface **25** on the bore through hanger body **15** for the intermediate string. An upwardly extending section **26** of the casing is connected to the hanger body **23** by means of a connector **27** for extension upwardly to the above-mentioned wellhead for suspen-

sion therefrom. As can be seen from FIG. 1, the casing string **22** and its extension **26** are the same size.

The seats **17** and **25** in the hanger bodies restrict the full opening through the outermost and intermediate strings. However, it is not necessary that these strings be full opening since the bit is not run to full gauge in drilling through them.

Flowways **28** are formed about the outside of hanger body **23** and flowways **31** are formed about the connector body **27** so as to augment the annulus area within casing **18**. Thus, as in the case of the intermediate string **14**, the string **22** may be secured in place by a cement column extending upwardly thereabout, and the returns from such cement column may be circulated upwardly through the flowways **28** to the wellhead at water level.

As shown in FIGS. 1 and 2, the connector **27** comprises an annular body threadedly connected at its upper end about the lower end of casing extension **26** and recessed about its lower end for disposal about an upwardly extending portion of the hanger body **23** above flowways **28**. More particularly, there are threads **29** on the recessed lower end of the connector body for engagement with threads **30** about the upwardly extending portion of the body **23**. These are preferably left hand threads so that the connector permits the extension string **26** to be released from the body **23**. In the position shown in FIG. 1, the connector body is fully made up with the hanger body **23** so as to bring the upper end of the recess within the body into engagement with the upwardly extending portion of the hanger body. At this time, seal rings **32** about the recess are in sealing engagement with the upwardly extending portion of the hanger body.

There are additional threads **33** formed about the upwardly extending portion of the hanger body **23** beneath the threads **30** and upon a larger diameter portion of such upwardly extending portion. These are right hand threads so as to provide a means for reconnecting a casing extension to the hanger body when it is desired to complete the well. Thus, as previously described, in the use of this apparatus, the casing extension **26** and its connector **27** will be removed from the hanger body **23** so that a cap may be disposed thereover until such time as it is desired to complete the well. Then, in completing the well, a casing extension will be lowered back into position for reconnection to the casing hanger body.

During the cementing operation, the returns will be circulated upwardly past the threads **33**, and this and other debris may clog the threads and make it difficult to later reconnect the casing extension to them. Slots **34** are formed vertically through the threads **29** so that, upon raising of the connector **27** to the position shown in FIG. 2 by backing off the threads **29**, a suitable liquid may be circulated downwardly through such slots and over the threads **33**. Thus, in the upper position of the body **27**, the seal rings **32** are raised out of sealing engagement with the upwardly extending end of hanger body **23**.

The bore through the annular body **23** has a recess intermediate its upper and lower ends **35** and **36**, respectively, which, as can be seen from the drawings, have minimum diameters equal to the diameter of each of the casing string **22**, its extension **26** and connector **27** therebetween so as to form a full opening therethrough. This recess includes an upper cylindrical portion having threads **37** formed thereabout and a lower downwardly and inwardly tapering surface **38** beneath such cylindrical portion. The lower end of the surface **38** terminates in an upwardly facing annular shoulder **39** which intersects the internal diameter of the lower end **36** of the body **23**.

The seat means **40** disposed with the recess of the bore comprises a generally tubular member having an upper cylindrical portion **41** provided with threads **42** thereabout for engagement with the body bore threads **37** and a plurality of circumferentially separated segments **43** depending from the cylindrical portion. More particularly, the segments are formed between slots **44** extending upwardly from the lower end of the tubular member. These slots are of equal width and equally spaced apart so that the adjacent segments are identical.

The upper outer surfaces **45** of the segments are recessed so as not to interfere with the threads **37** on the body bore and the lower outer surfaces **46** thereof are tapered downwardly and inwardly on a steeper taper than the surface **38** on lower end of the body bore recess. In the upper position of the seat means shown in FIGS. 1 and 2, the inner surfaces of the segments define a cylindrical opening which is a continuation of the inner diameter through the cylindrical portion **41** of the seat means. More particularly, the cylindrical opening thus defined through the seat means in its upper position has an internal diameter no less than the internal diameter formed through the upper and lower ends **35** and **36**, respectively, of the hanger body, as well as connector **27**, and thus through the casing strings **22** and **26**. In this manner, the seat means **40** will, in its upper position, pass any portion of the drill string which passes through the casing strings **22** and **26**.

However, as the seat means is moved from its upper to its lower position, as shown in FIG. 4, the outer surfaces **46** on the segments will slide downwardly and inwardly along surface **38** of the body bore recess. As can be seen from FIG. 4, this swedges the lower ends of the segment into a frusto-conical shape so that the inner surfaces thereof are flexed inwardly to form a downwardly and inwardly tapering seat within the hanger body having a minimum internal diameter less than the minimum internal diameter through the casing strings. As previously noted, however, the seat means is not moved to this lower position until the operator has finished drilling through the casing string **22**, so that this inwardly projecting surface defined by the seat does not interfere with the drilling operations.

As can be seen from FIG. 4, in the lower position of the seat means, the lower ends of the segments **43** abut the upwardly facing shoulder **39** on the lower end of the body bore recess. More particularly, this abutment occurs prior to engagement of the opposite sides of the slots **44** with one another. In this manner, the conical shape of the seat provided by the inner faces of the segments is predetermined, regardless of the tolerances of the slots.

It will also be seen from FIG. 4 that the threads **37** on the body bore are of such length that the threads **42** on the cylindrical portion **41** of the seat means remain in engagement therewith during the movement of the seat means between its upper and lower positions. As previously described, this will maintain the seat means in its lowered position against accidental displacement upwardly, as might otherwise be caused, for example, by engagement of casing collars with the lower ends of the segments **43**, especially during reciprocation of the casing for the purpose of working scrapers about the casing against the well bore. The continuous engagement of the threads **37** and **42** also permits the seat means to be returned from its lower to its upper position, in the event this becomes desirable, by a mere reversal of the operation to be described to follow.

In the illustrated embodiment of this invention, the upper end of the hanger body includes an annular ring **35** threadedly engaged with an upward extension of the threads **37** on the recess of the hanger body bore, in order to limit upward movement of the seat means and yet permit insertion or removal of the seat means **40** with respect to the recessed portion of the hanger body bore. However, it is contemplated that such ring may be eliminated so as to leave the upper end of the recess open. In any event, the segments **43** are flexed inwardly a small amount to permit the maximum outer diameter of such segments to pass through the threads **37** on the body bore.

As previously described, the seat means **40** is normally held in its upper position by means of shear pins **46**

connecting it to the hanger body **23**. As shown in FIG. 3, there are several of these pins which extend radially from the outer side of the cylindrical portion **41** of the seat means. More particularly, these shear pins are inserted from the outer side of the upwardly extending portions of the hanger body **23**. While the threaded engagement between the seat means and the hanger body will normally hold it against accidental displacement from its upper position due to downwardly directed impacts, the shear pins resist not only downward blows but also rotational forces to which the seat means might be subjected. This is especially true during rotation of the rotary drill string which ordinarily may be expected to engage and rub against the inner surface of the seat means **40**.

As also described previously, sufficient torque to shear the pins **46** is imposed upon the seat means by means of a tool lowerable through the casing extension **26** for engagement with the seat means. Thus, as shown in FIG. 4, a tool having a body **47** suspended upon drill pipe **48** or another running string **48** is lowered into a position in which dogs **49** carried thereon are caused to engage within grooves **50** extending downwardly from the upper end of the seat means **40**. As shown in FIG. 4A, these dogs **49** fit closely within the opposite sides of the grooves **50** so that rotation of the tool body **47** through the string **48** will impart torque to the seat means of sufficient magnitude to shear the pins **46** and then lower the threads **42** along the threads of **37** so as to move the seat means from its upper to its lower positions.

As shown in FIGS. 4 and 4A, there are two locking dogs **49** each of which is radially slidable within a recess **51** in the tool body **47**. More particularly, each such dog is urged outwardly by means of a coil spring **52** disposed between the inner end of each recess and the opposite inner end of the dog **49**. Such outward urging is limited by means of the pins **53** which are removably disposed across each recess, as best shown in FIG. 4A.

The upper and lower ends **52** and **53** of the locking dogs are tapered inwardly from their maximum outer dimensions to corners which, in the limited outward position of the dogs, are disposed to just inwardly of tool body recess **51**. Thus, although the dogs are urged outwardly as the tool is lowered through the casing string extension **26**, they do not have square shoulders which would tend to hang up in collars or other recesses within the casing string. Obviously, this is also true upon raising of the tool after its operation in moving the seat means from upper to lower position. Thus, as can be seen from FIG. 4, for example, the upper tapered end **52** of the dogs will merely slide over the sharp corner of the ring **45** of the hanger body as the tool is raised from within the seat means.

In use, the tool is lowered to a position a short distance above the hanger body **23** and then slowly rotated as it continues to be lowered. In this manner, the operator knows when the tool has been engaged with the seat means, because he will encounter resistance to rotation as the dogs **49** move into the grooves **50**. He then continues to rotate the string **48** so as to impart torque through the tool to the seat means **40** for shearing the pins **46** and then gradually threading the seat means down from its upper to its lower position. The operator knows that the seat means has been moved to its lower position inasmuch as the lower ends of the segments **43** will encounter the shoulder **39** and thus limit further rotation of the seat means. At this time, the operator may remove the tool **47** to enable running of the next inner casing string merely by raising the tool upon the string **48**.

As best shown in FIG. 4A, vertical grooves **54** are formed through the threads **42** about the cylindrical portion **41** of the seat means. Thus, during lowering of the seat means from its upper to its lower position, drilling mud or other debris which may become caked in the threads **37** on the body bore will be extruded upwardly through the grooves **54**, and thus not interfere with the downward movement of the seat means.

Along this same line, drilling mud and other debris has a tendency to become lodged within the slots **44** between segments **43**. As best shown in FIG. 1A, these slots are tapered divergently inwardly in order to extrude at least part of this debris upon swedging of the segments inwardly during lowering the seat means.

Upon moving the seat means **40** to its lower position and removal of the running tool **47** from within the casing string **26**, the next inner casing **55**, shown in FIGS. 5 and 6, is run through the casing **22** and its extension **26** so as to lower it into the hole drilled through casing string **22**. More particularly, when the casing string **55** has been so lowered, it is suspended from the intermediate suspension for the casing string **22** by means of hanger body **23*a*** which is connected to the upper end of casing string **55**. The lower end of casing string extension **56** is connected to the upper end of hanger body **23*a*** for extension upwardly to the previously mentioned wellhead at water level. More particularly, extension **56** is connected to the hanger body **23*a*** by means of a connector **27*a***. When the string **55** has been so suspended, it is secured in place by means of a cement column thereabout, with the returns being circulated upwardly through the annulus between the strings **22** and **55** and thence through flowways **28*a*** formed in the outer surface of the hanger body **23*a*** into the annulus between casing string extensions **18** and **56**.

As can be seen from FIGS. 5 and 6, the outer surface **24*a*** of hanger body **23*a*** is tapered downwardly and inwardly correspondingly to the downwardly and inwardly tapering surface defined by the inner faces of the segments **43** of the seat means **40**. Thus, as can be seen from FIG. 5, the maximum outer diameter of this hanger body is freely lowerable through the casing extension **18**, the upper end of the hanger body **23** and the upper cylindrical portion of the seat means **40**, so that its downwardly and inwardly tapering surface **24*a*** is free to move downwardly into seating engagement with the lowered seat means **40**.

If desired, one or the other of the confronting tapered surfaces on hanger body **23** and hanger body **15** may be roughed, as by means of teeth thereabout, in order to reduce the possibility of swedging the inner body inwardly under load. One or the other of the confronting tapered surfaces on hanger body **23*a*** and segments **43** may, if desired, be similarly treated to prevent bottlenecking of the inner body.

In the event the casing string **55** is the last one to be run, the hanger body **23*a*** may be of generally conventional conical construction. However, in the event a still further casing string is to be run through the string **55**, the hanger body **23*a*** is constructed similarly to the hanger body **23** in that it has a recess about the bore thereof to receive seat means **40*a*** similar in construction and function to the seat means **40**. Thus, as can be seen from a comparison of FIGS. 5 and 6, seat means **40*a*** may, similarly to the seat means **40**, be lowered from the upper "full opening" position of FIG. 5 to the lower position of FIG. 6 to define a downwardly and inwardly tapering surface adapted to support a correspondingly tapered surface on a hanger body connected as a part of a still further inner casing string (not shown).

Since the parts of the hanger bodies and seat means thus correspond in construction and function, those of the apparatus connected as an intermediate part of the casing strings **55** and **56** carry numbers corresponding to those connected as an intermediate part of casing strings **18** and **22** except for the addition of sub letter *a*. Obviously, a description of neither the construction nor the operation of these parts need be repeated herein. It is equally obvious that additional apparatus of this latter type may be provided upon additional inner casing strings, as the need arises.

From the foregoing, it will be seen that this invention is one well adapted to attain all of the ends and objects hereinabove set forth, together with other advantages whtich are obvious and which are inherent to the apparatus.

It will be understood that certain features and subcombinations are of utility and may be employed without reference to other features and subcombinations.

The invention having been described, what is claimed is:

1. Apparatus for use in suspending an inner pipe string having a hanger body secured thereto within an outer pipe string of a well and provided with a seating surface thereabout, comprising an annular body having a wall means defining a bore therethrough and a downwardly and inwardly tapering surface within the bore wall, means on the annular body for connecting it to the outer pipe string, and a generally tubular member within said bore wall including an upper circumferentially continuous cylindrical section threadedly connected to threads on the bore wall for movement vertically between upper and lower positions therein and a lower vertically slotted section defining circumferentially separated segments which depend from said cylindrical section and which slide downwardly and inwardly along said tapering surface within the bore as the tubular member moves from its upper to its lower position, the inner faces of said segments defining a cylindrical continuation of the opening through said cylindrical section in the upper position of said member and a downwardly and inwardly tapering surface corresponding to the seating surface of the hanger body in the lower position of said member.

2. Apparatus of the character defined in claim 1, wherein said tubular member has at least one groove extending vertically within its bore wall for receiving part of a tool for transmitting torque to said tubular member.

3. Well apparatus, comprising an annular hanger body having wall means defining a bore therethrough and a seat about its outer side and seat means on its bore wall for supporting an inner casing hanger, threads about the body above its outer seat, additional threads about a smaller diameter portion of the body above the first-mentioned threads, and a tool for running the hanger body including a body having internal threads for engaging the additional threads of said hanger body, means for sealably engaging said tool with the hanger body above said additional threads when fully made up with said additional threads, and slots in the internal threads of the running tool body to permit the first-mentioned threads to be washed over when said running tool body is raised to break said sealing engagement.

4. Apparatus for use in suspending an inner pipe string having a hanger body secured thereto within an outer pipe string arranged within a casing string of a well having seating means therein, comprising an annular body having a wall means defining a bore therethrough and means on its upper and lower ends for connecting it as a part of the outer pipe string, a seat on the outer side of the annular body for landing it on the seating means within the casing string, a recess on its bore wall having a downwardly and inwardly tapering surface, and at least one flowway in the annular body connecting at its opposite ends above and below the seat, and annular seat means movable vertically within the recess and having circumferentially sepaarted segments which are caused to slide downwardly and inwardly over said tapering surface upon movement of said seat means from an upper to a lower position, and means to hold said annular seat in said upper position, said segments defining an opening in the upper position of the seat means to pass a drill string therethrough and an upwardly facing tapered seating surface in the lower position of the seat means to provide a support for the hanger body as said inner pipe string is lowered into the outer pipe string.

5. Apparatus of the character defined in claim 4, wherein means to hold said annular seat means in said upper position comprises at least one shear pin, between the annular body and the cylindrical section of the seat means.

6. Apparatus of the character defined in claim 4, wherein said annular seat means includes an upper cylindrical section from which the circumferentially separated segments depend, and said means to hold said annular seat means in said upper position comprises at least one shear pin between the annular body and the cylindrical section of the seat means.

7. Apparatus for use in suspending an inner pipe string having a hanger body secured thereto within an outer pipe string arranged within a casing string of a well having seat means therein, comprising an annular body having wall means defining a bore therethrough and means thereon for connecting it to the outer pipe string, seat means within the casing string, a seat on the outer side of the annular body for landing it on the seat means within the casing string, a recess in its bore wall having a downwardly and inwardly tapering surface, at least one flowway in the annular body connecting at its opposite ends and above and below the seat, annular seat means including an upper cylindrical section having threads thereabout engageable with threads about the recess of said annular body to permit said cylindrical section to be moved between an upper and lower position within said recess responsive to rotation of said upper cylindrical section and circumferentially separated segments depending from the cylindrical section for sliding downwardly and inwardly over said tapering surface upon movement of said cylindrical section from its upper to its lower position, said segments defining an opening in the upper position of the cylindrical section to pass a drill string therethrough and an upwardly facing seat in the lower position of the cylindrical section to provide a support for the hanger body as said inner pipe string is lowered into the outer pipe string, means releasably connecting the upper cylindrical section to the annular body in the upper position of said cylindrical section to prevent its accidental displacement of said lower position, and a groove on the inside of the seat means for receiving a torque transmitting tool lowered through said outer string in order to rotate said cylindrical section for releasing its connection to the annular body and moving it from its upper to its lower position.

8. Apparatus for use in suspending an inner pipe string within an outer pipe string of a well, comprising an outer annular body connectible as an intermediate part of the outer pipe string and having wall means defining a bore therethrough with a downwardly and inwardly tapering surface, a seat on the outer side of the outer body, seat means having circumferentially separated segments within said bore which are slidable downwardly over said tapering surface between an upper position defining an opening through which a drill string may be passed and a lower position defining a downwardly and inwardly tapering seating surface, and means to hold said seat means in said upper position, an inner annular body connectible to the inner pipe string and having a downwardly and inwardly tapering surface thereon for landing upon said seating surface as said inner body is lowered with said inner pipe string into said outer pipe string, and means for limiting downward movement of the seat means beyond said lower position, said outer body having at least one flowway connecting its outer side above and below the seat thereon.

9. Apparatus of the character defined in claim 8, wherein said inner body has at least one flowway connecting its outer side above and below the seating surface thereon.

10. Apparatus for use in suspending an inner pipe string having a hanger body secured thereto within an outer pipe string and suspending the outer pipe string within a casing string of a well, comprising an outer annular body having wall means defining a bore therethrough and means on its upper and lower ends for connecting it as a part of a casing string, a seat within the

bore wall of the outer body, an inner annular body having means on its upper and lower ends for connecting it as a part of the outer pipe string, a seating surface on its outer side for landing it on the seat on the outer body, at least one flowway therein for connecting the annular space between the casing string and outer pipe string, and a recess on its bore wall having a downwardly and inwardly tapering surface, and annular seat means movable vertically within the recess and having circumferentially separated segments which are caused to slide downwardly and inwardly over said tapering surface upon movement of said seat means from an upper to a lower position, and means to hold said annular seat means in said upper position, said segments defining an opening in the upper position of the seat means to pass a drill string therethrough and an upwardly facing seat in the lower position of the seat means to provide a support for the hanger body as said inner pipe string is lowered into the outer pipe string.

11. Apparatus for use in suspending inner and outer pipe strings within a casing string of a well, comprising an outer annular body having wall means defining a bore therethrough and means on its upper and lower ends for connecting it as part of a casing string, a seat within the bore wall of the outer body, an intermediate annular body having means on its upper and lower ends for connecting it as a part of the outer pipe string, a seating surface on the outer side of the intermediate body for landing it on the seat of the outer body, a recess in the bore wall of the intermediate body having a downwardly and inwardly tapering surface, annular seat means movable vertically within the recess and having circumferentially separated segments which are caused to slide downwardly and inwardly over said tapering surface upon movement of said seat means from an upper to a lower position, and means to hold said annular seat means in said upper position, said segments defining an opening in the upper position of the seat means to pass a drill string therethrough and an inwardly facing seat in the lower position of the seat means, an inner annular body

having means on its upper and lower ends for connecting it as a part of the inner pipe string, and a seating surface on the outer side of the inner body for landing it on the upwardly facing seat of the seat means within the intermediate body, at least one flowway in the intermediate body connecting above and below the seat surface thereon, and at least one flowway in the inner body for connecting above and below the seating surface thereon.

12. Apparatus of the character defined in claim **11**, wherein there is a recess in the bore wall of the inner body having a downwardly and inwardly tapering surface, and an annular seat means is movable vertically within the recess, and has circumferentilly separated segments which are caused to slide downwardly and inwardly over said tapering surface upon movement of said seat means from an upper to a lower position, and means to hold said last-mentioned annular seat means in said upper position said segments defining an opening in the upper position of the seat means to pass a drill string therethrough and an upwardly facing seat in the lower position of the seat means.

References Cited

UNITED STATES PATENTS

2,607,422	8/1952	Parks et al.	285—133
2,699,589	1/1955	Redell	24—263.5
2,784,627	3/1957	Mueller et al.	285—39
3,090,640	5/1963	Otteman et al.	285—18 X
3,179,448	4/1965	Jones	285—146
3,298,699	1/1967	Hall	285—18 X
3,334,923	8/1967	Putch	285—3 X
3,335,799	8/1967	Miller	285—18

DAVID J. WILLIAMOWSKY, Primary Examiner

DAVE W. AROLA, Assistant Examiner

U.S. Cl. X.R.

285—39, 141, 322