Feb. 10, 1970 V. F. MAZZIO ETAL 3,494,991

METHOD AND APPARATUS FOR SEPARATING, ALIGNING, AND COLLECTING FIBERS FROM A FIBROUS MASS

Filed April 14, 1967

Fig. 1.

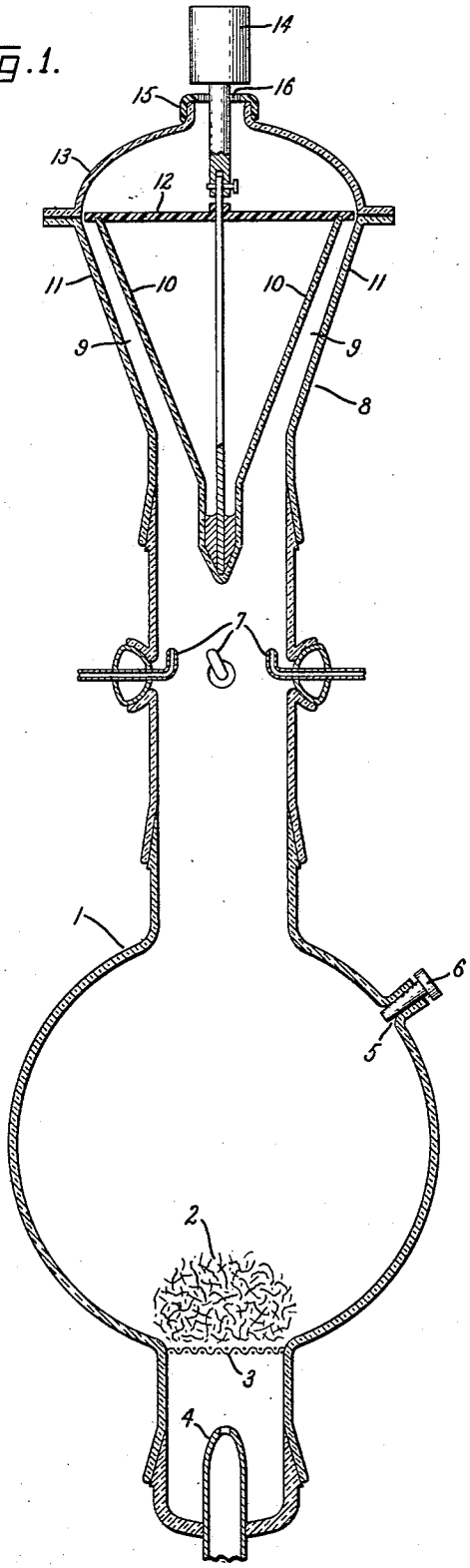

Fig. 2.

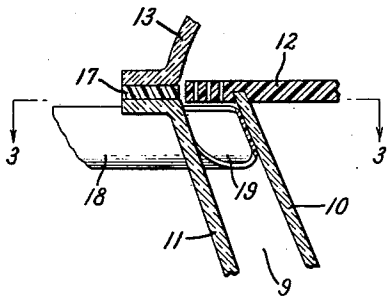

Fig. 3.

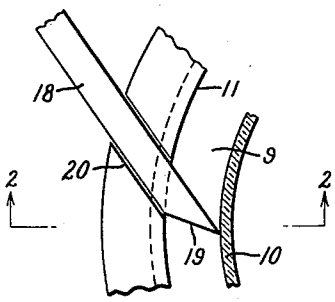

INVENTORS:
VITO F. MAZZIO,
JOSEPH V. MULLIN.

BY Paul F. Prestin
AGENT

United States Patent Office

3,494,991

Patented Feb. 10, 1970

1

3,494,991

METHOD AND APPARATUS FOR SEPARATING, ALIGNING, AND COLLECTING FIBERS FROM A FIBROUS MASS

Vito F. Mazzio, West Chester, Pa., and Joseph V. Mullin, East Cherry Hill, N.J., assignors to General Electric Company, a corporation of New York

Filed Apr. 14, 1967, Ser. No. 631,014
Int. Cl. D04h 5/00
U.S. Cl. 264—121 5 Claims

ABSTRACT OF THE DISCLOSURE

A method and apparatus for aligning fibers, such as α-alumina whiskers, for directionally reinforcing composite materials, by pneumatically conveying individual fibers upwardly through an annular passageway defined by inner and outer frustoconical elements, with the major bases of both located at the top thereof. Preferably, the base angle of the outer segment is slightly larger than that of the inner segment so that the width of the passageway decreases with elevation as the cross-sectional area remains relatively constant. A mat is formed on a porous closure located at the top of the passageway. Means may be provided for continuously removing the mat as it is formed.

Introduction

The present invention relates to improved means for aligning and collecting separated fibers from a fibrous mass. More particularly, this invention relates to a method and device for aligning pneumatically separated fibers and then collecting these fibers in their aligned state.

Background of the invention

Directionally tailoring the properties of fiber-reinforced composites often requires orientation of fiber reinforcing materials. High strength materials used for this purpose, such as α-alumina whiskers, are usually produced in entangled masses which are difficult to separate. While others have invented effective means to separate, to classify according to size, and to collect fibers from a fibrous mass, there has heretofore been no effective means for automatically aligning these fibers to facilitate their orientation in fiber-reinforced composites.

Objects of the invention

It is therefore an object of the present invention to provide a method and means for aligning and collecting individual fibers.

It is also an object of this invention to provide, in an integrated combination, a means for pneumatically separating and a means for pneumatically aligning fibers.

Another object of this invention is to provide a system for separating aligning, and collecting α-alumina whiskers from an entangled mass thereof.

Brief summary of the invention

These and other objects are met, in accordance with the present inevntion, by a vertical passageway, annular in horizontal cross-section, a pneumatic means for conveying fibers upwardly through this passageway, and a means for collecting aligned fibers at the top of the passageway. Generally, this passageway is defined by two frustoconical segments having common, vertical axes and major bases located at the top thereof. The inner frustoconical segment may, of course, also be part of a cone or modified cone. A porous barrier or other collection means disposed at the top of the passageway collects or removes these aligned and separated fibers. In a preferred form, the base angle at the top of the larger or outer

2

frustoconical segment is larger than that of the inner or smaller frustoconical segment so that, as the passageway becomes narrower with increasing elevation, it maintains a relatively constant cross-sectional area at all elevations. This minimizes turbulence in the passageway and enhances the tangential alignment of fibers in the annular shape of the passageway.

Detailed description of the invention

While the specification concludes with claims particularly pointing out and distinctly claiming the subject matter of the present invention, this invenion may be beter understood from the following detailed description, taken in conjunction with the drawings, in which:

FIGURE 1 is a cross-sectional view of fiber separating apparatus, in which is incorporated the preferred form of fiber aligning means of the present invention;

FIGURE 2 is a detailed sectional view of one form of aligned fiber collection means which may be used in the present invention; and

FIGURE 3 is a cross section of the detail shown in FIGURE 2.

Refering more specifically to FIGURE 1, there is shown a pneumatic separatory chamber **1** with a fibrous mass **2**, to be separated, disposed at the bottom thereof, on a screen **3**, and nozzle **4** for producing a pulsating gas jet flowing upwardly through the fibrous mass and the separatory chamber. Separatory chamber **1** also includes an opening **5** with a plug **6** therein. Additional fibrous mass may be added to the separatory chamber **1** through opening **5**. Directable non-pulsating gas inlet means **7** are included to enhance separation of fibers in the separatory chamber **1**. At the top of sepatory chamber **1** is a fiber alignment means **8** comprised of an annular vertical passageway **9** defined by an inner wall **10** having a modified cone shape, and an outer frustoconical wall **11**. Fibers aligned in alignment means **8** are collected at the top thereof by a porous closure **12** covering the exit of annular vertical passageway **9**. The width, i.e. the difference in length of the radii of the inner and outer circumferences, of annular vertical passageway **9** somewhat smaller than the length of a majority of the fibers to be aligned. Alignment means **8** is covered by a cap **13** which includes gas escape means.

In order to operate alignment means **8** in a continuous, as opposed to a batch process, a means **14** is provided for slowly rotating the inner wall **10** of passageway **9** and the porous closure **12** at the top of pasageway **9**. To facilitate this rotating movement, a material having a low coefficient of sliding friction is used at the outer edge of porous closure **12** and at the point **15** where rotating means **14** enters alignment means **8**. The entry point **15** for the rotating mechanism **14** may comprise a resinous bushing which is part of closure cap **13** and which includes small holes **16** for providing the gas escape means in enclosure cap **13**.

The low coefficient of sliding friction material at the outer edge of porous closure **1** may be provided by using such a material for the porous closure **12**. Thus, a polytetrafluoroethylene (such as that commercially available from Du Pont as "Teflon") disc with small holes drilled around the outer edge thereof may serve as porous closure **12** and eliminate the need for a separate low coefficient of sliding friction material at the outer edge thereof.

Greater detail of the outer edge of porous closure **12** and a continuous collection means for aligned fibers may be seen in FIGURE 2. In this detail view are seen passageway **9**, inner wall **10**, outer wall **11**, and porous closure **12** along with alignment means cap **13** and resinous gasket **17**. A tubular conveying means **18**, the terminus **19** of which blocks the top of passageway **9** at one point

thereof, enters outer wall **11**, through a collection port in wall **11**, not shown. FIGURE 3, which is a cross section of the detail view shown in FIGURE 2, better illustrates the relative positions of conveying means **18**, and passageway **9**. Collection port **20** in the outer wall **11** is also shown in FIGURE 3.

As shown, in the preferred embodiment of this invention, the width of annular passageway **9** decreases with increasing elevation while both the inner and outer diameters of the passageway increase. This enhances tangential alignment of fibers in the passageway **9**, while reducing or minimizing turbulence in the passageway since the cross sectional area of the passageway remains relatively constant. Such passageway geometry is preferred for the reasons indicated, but other passageway geometries may also be used. In particular, inner wall **10** may be formed of shapes other than the modified cone shown. These other shapes may include, for example, unmodified cones, frustoconical segments, etc.

In a modification of the apparatus, not shown, the rotating and continuous collecting means is eliminated entirely and the apparatus operated in a batch fashion. This form of the apparatus is operated for a period of time and a strand of aligned fibers is then removed from the porous closure **12** at the top circumference of passageway **9**.

In still another modification, not shown, suction means may be added at the top of alignment means **8** to enhance alignment and collection therein.

With regard now to the continuous operation of the apparatus shown in FIGURES 1, 2, and 3, a fibrous mass is placed in separatory chamber **1** and a pulsed compressed gas flow, such as a continuously pulsating compressed air jet, is emitted from nozzle **4**. The pressure and volumetric flow rate of this gas jet is controlled so that it is not substantially more than that required to carry the individual fibers to be separated upwardly through separatory chamber **1**. The frequencies of pulsations of the compressed air may vary over a wide range. Normally, however, a frequency of 2 to 3 pulses per second is used.

Compressed gas at a pressure slightly below that emanating from nozzle **4** may be admitted to separatory chamber **1** through auxiliary jets **7**. These jets can be adjusted and directed to produce a vortex in the gas flowing upwardly through separatory chamber **1** and thereby to enhance the separation of individual fibers from fibrous mass **2**.

As fibers are conveyed upwardly through separatory chamber **1**, they tend for aerodynamic reasons to orient their longest dimension horizontally. In the alignment means **8**, the fibers, in the annular vertical passageway, orient themselves generally tangentially with respect to the annular cross section of the passageway. Thus the fibers are confined to some extent in all dimensions and reach the collection point at the top of the passageway reasonably well aligned with one another. These aligned fibers may be harvested as a mat on the porous closure **12**. Preferably, however, these fibers are continuously withdrawn as a long linearly oriented mass through tubular conveying means **18** as the porous closure **12** is rotated at about 1–10 revolutions per hour. The rotating movement of porous closure **12** causes fibers collected throughout the circumference of porous closure **12** to be separated therefrom as each point on the circumference is rotated into registry with tubular conveying means **18**.

The long linearly oriented mass produced in the apparatus and process described above has little integrity as produced and must therefore be impregnated with a matrix material. Generally, before and after impregnation the strand is also compacted by a series of reducing rollers until a very fine strand with a high volumetric proportion of fibers is produced. If the matrix material is resinous, it may be partially cured at some intermediate point in this process and then completely cured after the strand has been sufficiently compacted. With a width at the top of passageway **9** on the order of 0.25 inch, this technique has been used to produce a composite, comprising an epoxy matrix and a multiplicity of α-alumina whiskers 1–20 microns in diameter and 1–10 millimeters in length. In one series of these composites, the average volumetric concentration of whiskers was 42% and only two of nine composites were below 30 volumetric percent. By comparison, strands of the same material, similarly impregnated, compacted, and cured but differing in that the whiskers were aligned by hand, averaged 30 volumetric percent, and six out of nine composites were below 30 volumetric percent. Since the strength of a composite and alignment of whiskers in a strand are generally related to the volumetric percent of high strength reinforcement in the composite, these figures indicate that a much improved strand and method of making such a strand are provided by the present invention.

The integrity of the continuous linearly oriented strand of fibers withdrawn from passageway **9** may be further improved by the use of a resin or adhesive-coated collection filament disposed between the inner and outer circumferences of the annular fiber collection space near the top of passageway **9**. This collection filament is stationary in the batch process but moves slowly in the continuous process form of the present invention so as to minimize the relative motion between the collection strand and the porous barrier **12**. Aligned fibers, as collected, adhere to this filament. The subsequent compacting and heat treating of the resin-coated filament with aligned fibers collected thereon produces a handleable strand of oriented fibers which is not easily destroyed and which has extremely desirable properties especially in its longitudinal direction. In one such strand formed in this way, a collection filament comprised of cellulosic thread may be used and later burned away during the compacting and curing process to improve the density and volumetric concentration of fibers in the final strand.

While the present invention has been described with reference to particular embodiments thereof for purposes of clarity and convenience, it should be understood that numerous modifications may be made by those skilled in the art without departing from the invention's true spirit and scope.

What we claim as new and desire to secure by Letters Patent of the United States is:

1. A method for producing a formed mat of a multiplicity of longitudinally aligned fibers, comprising: projecting within a container a pulsating vertical gas jet through a mass of fibers to carry said fibers upwardly into a conically annular vertical passageway having a cross-sectional width at the upper portion thereof less than the longest dimension of said fibers, said passageway terminating with a porous closure thereabove; said fibers, being pneumatically and by contact with said annular passageway oriented and longitudinally aligned tangentially with respect to said pasageway, are collected as a mat upon said porous closure.

2. A method as in claim **1** further comprising the step of rotating said porous closure to facilitate removal of said formed mat from said closure.

3. The method of claim **1** wherein said fibers are α-alumina whiskers.

4. A fiber alignment and collection means for producing a mat of a multiplicity of longitudinally aligned fibers, comprising:

a container having a vertically disposed, conically annular passageway defined by inner and outer conical walls, said passageway having a cross-sectional width at the upper portion thereof less than the longest dimension of said fibers;

a porous closure means at said upper portion of said passageway for collecting said fibers in an aligned condition; and

means for projecting a pulsating vertical gas jet within

said container upwardly through a mat of said fibers into said passageway.

5. A fiber alignment and collection means as in claim 4 further including means for rotating said closure means.

References Cited

UNITED STATES PATENTS

2,257,112	9/1941	Forster	264—91
2,714,081	7/1955	Burgon	264—91
3,073,735	1/1963	Till et al.	264—121
3,081,951	3/1963	Dyer et al.	18—1
3,334,161	8/1967	Gusman	18—1

FOREIGN PATENTS

816,285	7/1959	England.

ROBERT F. WHITE, Primary Examiner

J. R. HALL, Assistant Examiner

U.S. Cl. X.R.

18—1, 5.6