Feb. 3, 1970 D. J. WYROUGH 3,493,258

CARGO CONTAINER LIFTING EQUIPMENT

Filed Aug. 10, 1967 5 Sheets-Sheet 1

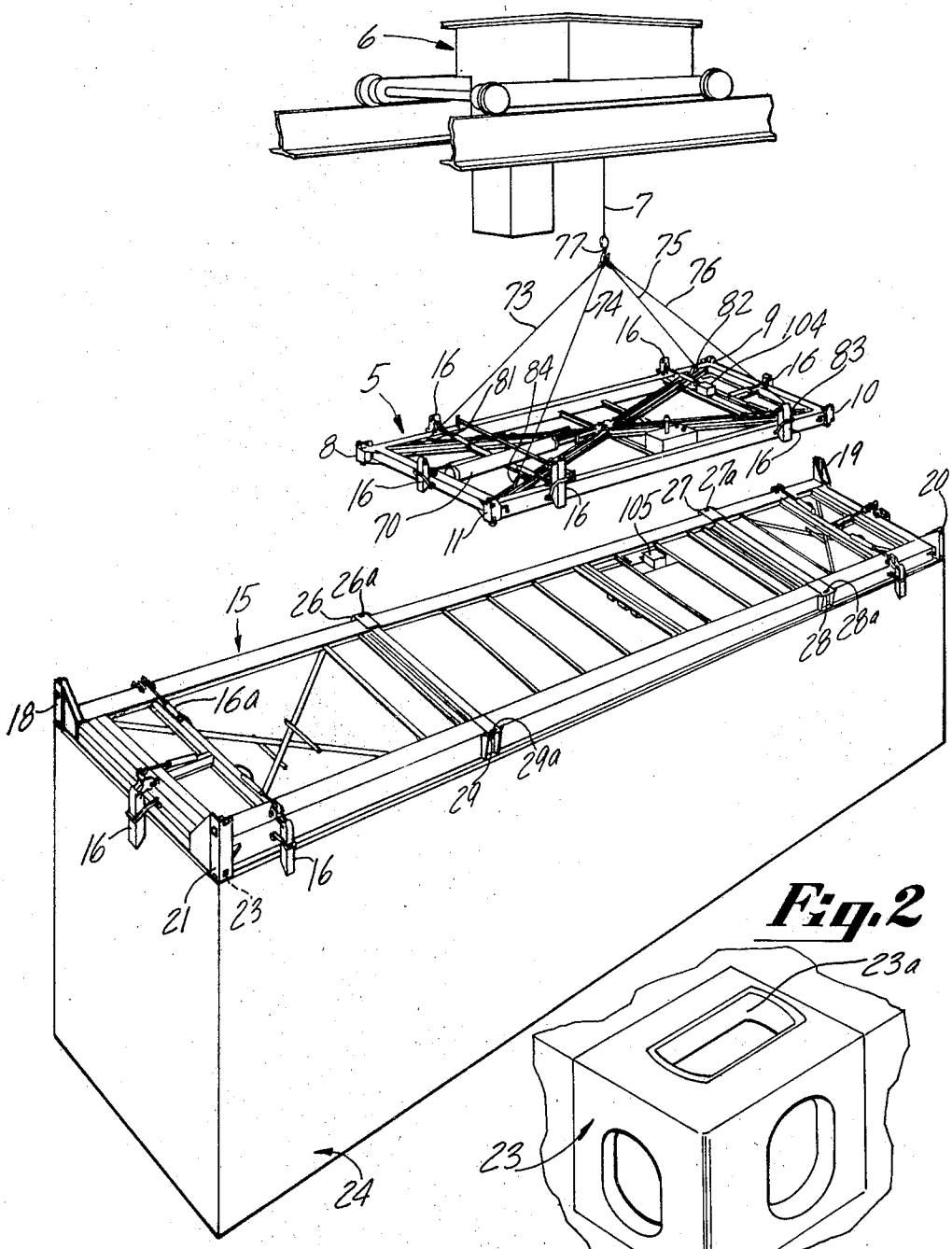

Fig. 1

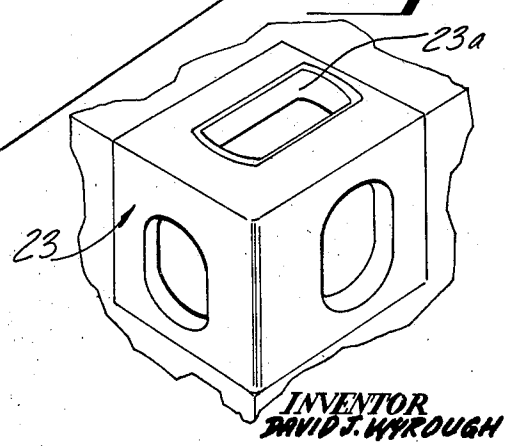

Fig. 2

INVENTOR
DAVID J. WYROUGH

BY

ATTORNEY

CARGO CONTAINER LIFTING EQUIPMENT

Filed Aug. 10, 1967 5 Sheets-Sheet 2

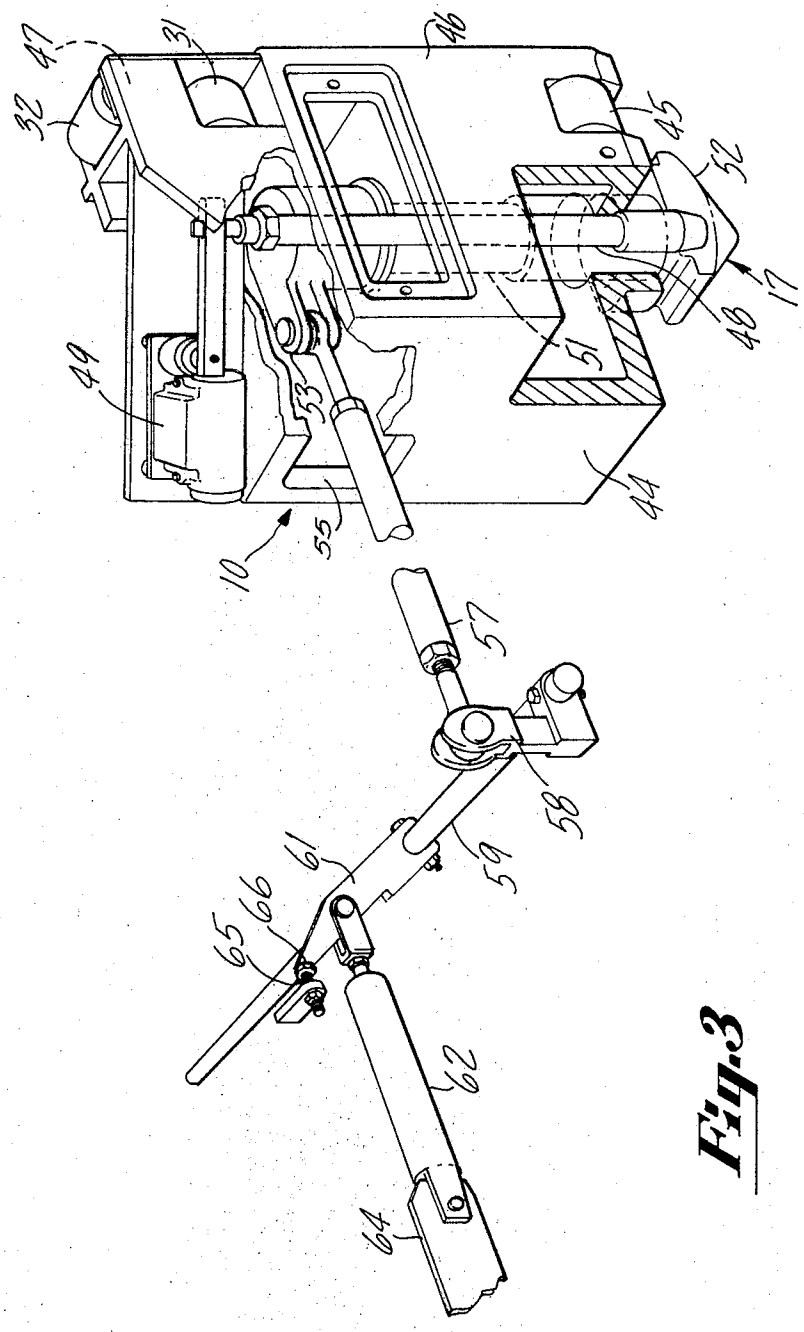

Fig. 3

INVENTOR
DAVID J. WYROUGH
BY M. Porter
ATTORNEY

CARGO CONTAINER LIFTING EQUIPMENT

Filed Aug. 10, 1967 5 Sheets-Sheet 3

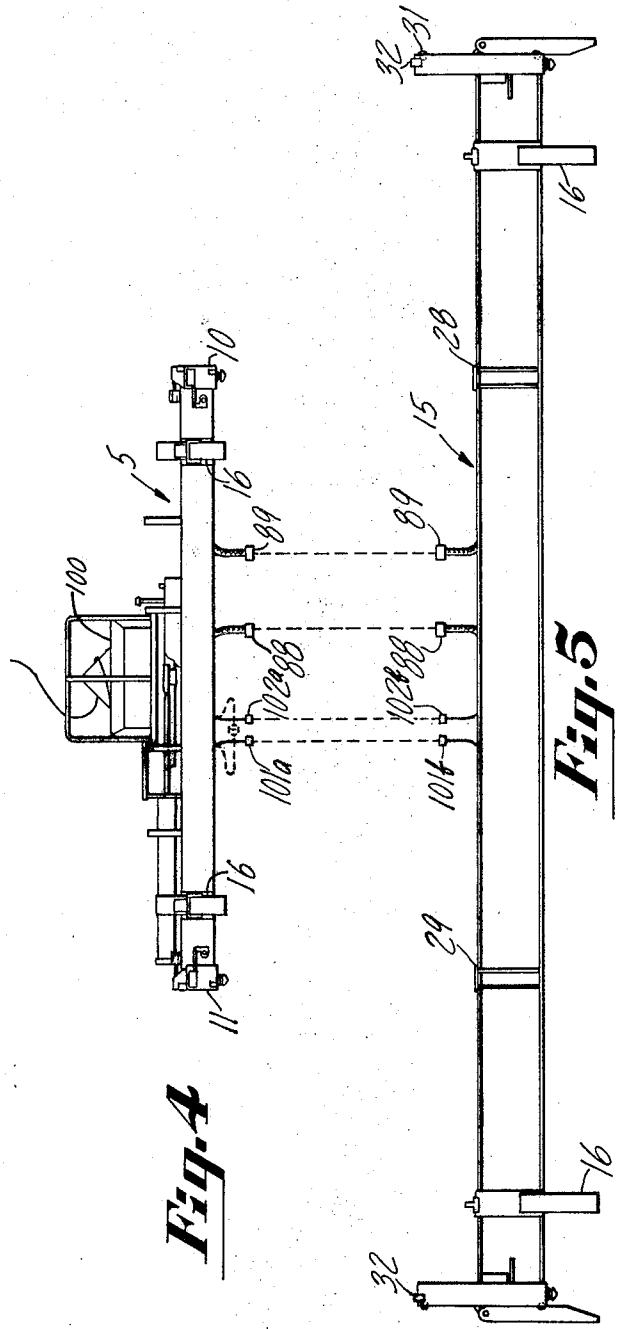

Fig. 4

Fig. 5

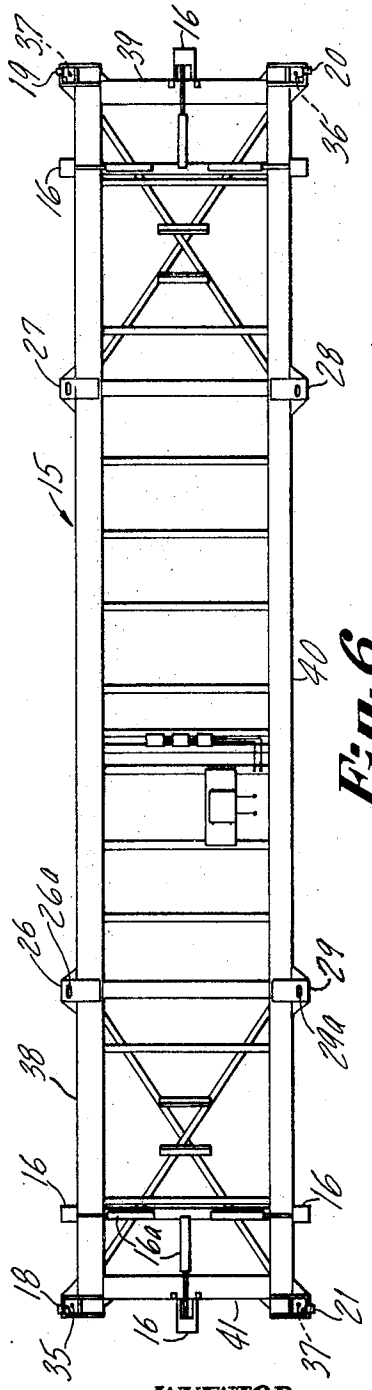

Fig. 6

INVENTOR
DAVID J. WYROUGH

BY

ATTORNEY

CARGO CONTAINER LIFTING EQUIPMENT

Filed Aug. 10, 1967 5 Sheets-Sheet 4

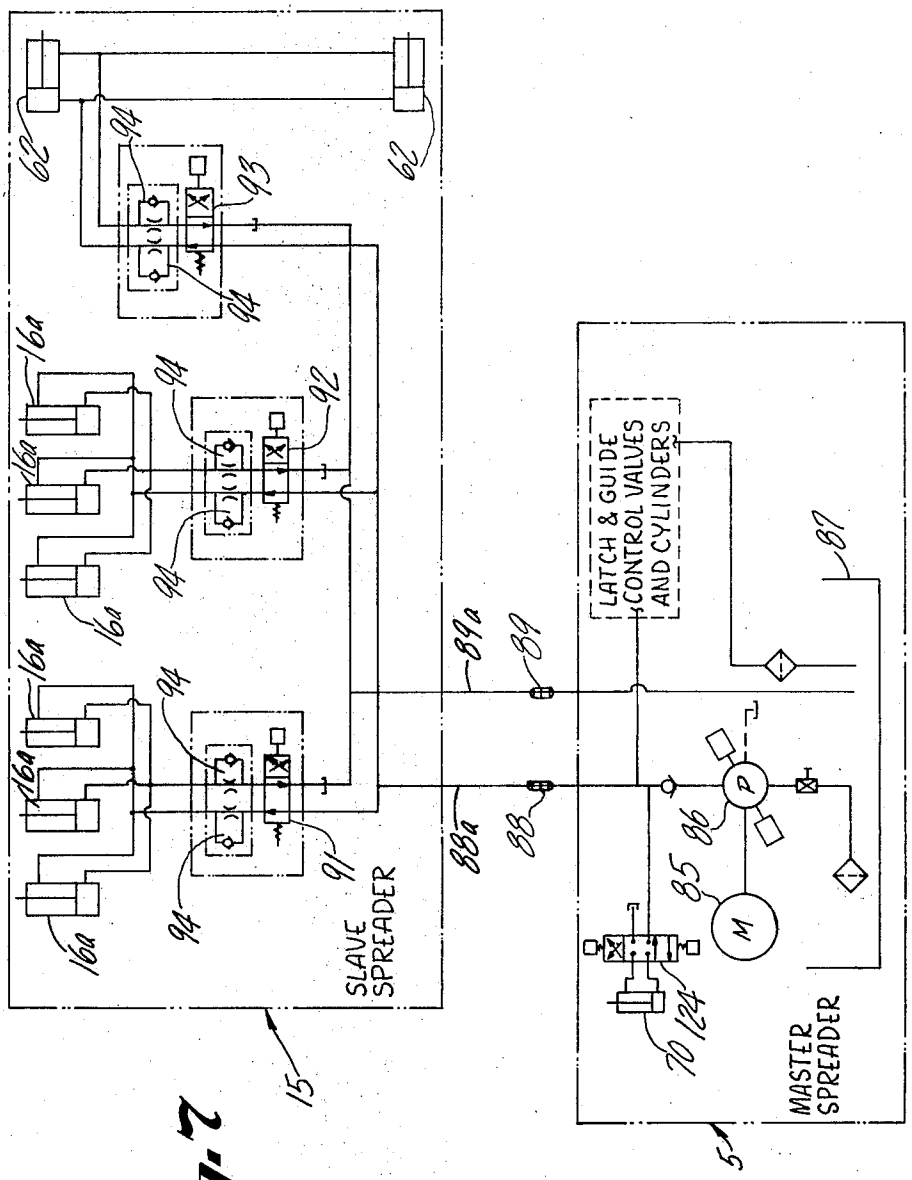

Fig. 7

INVENTOR
DAVID J. WYROUGH

BY

W. M. Forty
ATTORNEY

CARGO CONTAINER LIFTING EQUIPMENT

Filed Aug. 10, 1967 5 Sheets-Sheet 5

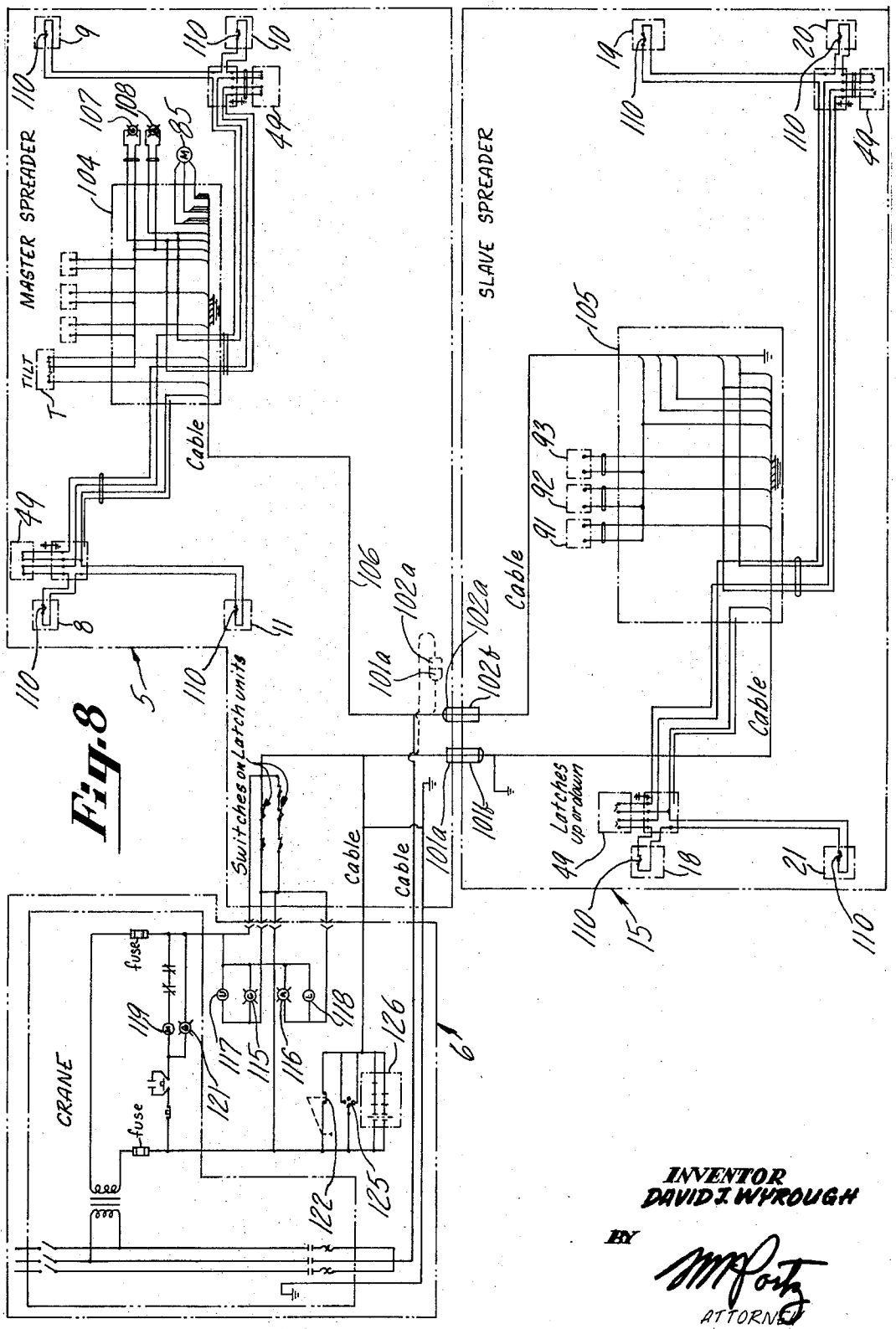

Fig. 8

INVENTOR
DAVID J. WYROUGH
BY
ATTORNEY

United States Patent Office

3,493,258

Patented Feb. 3, 1970

1

3,493,258

CARGO CONTAINER LIFTING EQUIPMENT

David J. Wyrough, Roxboro, N.C., assignor to Midland-Ross Corporation, Cleveland, Ohio, a corporation of Ohio

Filed Aug. 10, 1967, Ser. No. 659,709
Int. Cl. B66c *1/00, 19/00*
U.S. Cl. 294—67 2 Claims

ABSTRACT OF THE DISCLOSURE

A combination of interlocking spreaders for cargo containers wherein one spreader may interlock with and lift either containers or another auxiliary, generally longer, spreader having appropriately arranged receptacles in the upper surfaces thereof for receiving latches of the shorter spreader. The longer spreader is adapted to lift longer containers than the shorter spreader.

DESCRIPTION

Within that portion of the transportation industry served by the common carriers, there are substantial increases each year in shipments of goods packaged in cargo containers of the type approximating truck or railway car body sizes. There is also a strong shift in containerization toward standardization in the dimensions of containers and lifting equipment and particularly in structure for connecting lifting equipment to containers. However, because of standardization of the height and width of containers, structural aspects of container handling equipment related to height and width of containers are reaching rigid standardization; containers of different lengths, e.g., twenty and forty foot lengths, are deemed necessary to adapt operations to inevitable differences in the sizes of shipments, the size of carrying media, and other factors which contribute flexibility and economy to freight-handling activity.

The design of cargo containers has rapidly assumed the type which is of rectangular configuration in three perpendicular planes and comprises four top corner receptacles or fixtures at the corners of its upper surface capable of receiving hooks, latches or such connecting means as is adapted to project downwardly from four corners of a frame-like lifting implement now known in the industry as a "spreader."

Differences in container length necessitate the use of spreaders of different sizes, e.g., at freight terminals, at which capability is desired for receiving all types of containers or other packages for delivery or forwarding further along respective routes of shipment.

Hence, essential objects of this invention are to provide a spreader arrangement capable of handling cargo containers of different lengths; to provide a spreader arrangement that will substantially minimize the cost of equipment necessary for handling containers of different lengths; to provide equipment that is easily, securely, and conveniently stored, e.g., in the hold of a ship, on the top of containers or hatch covers having a pattern of receptacles corresponding to its pattern of latches, with the latches interlocked with the receptacles.

These and other objects of the invention are achieved in a spreader combination based upon the general concept that the basic component of the combination is a complete independent spreader called a "master" spreader, constructed to interlock with cargo containers of substantially shortest length to be handled in practical quantities. Another essential component is one or more auxiliary spreaders, generally of greater length. Such a spreader is termed herein as a "slave" spreader and has receptacles in its principal upper plane corresponding in

2

pattern with the latches of the master spreader. Much structure and some of the actuating facilities carried on the master spreader are not duplicated on the slave spreader as both spreaders are normally equipped with power-retractable guides and power-operated latches. A control system may be provided in a preferred embodiment for bypassing the latches and guides, most importantly the latches, of the master spreader so that an operator cannot inadvertently detach the slave from the master.

In the drawing with respect to which the invention is described below in detail:

FIG. 1 is a perspective view of a cargo container, an auxiliary or slave spreader in position on the top surface of a container, and a master spreader with some minor parts not shown as supported by a crane in separated but vertically aligned position above the slave spreader;

FIG. 2 is a fragmentary perspective view of a corner portion, essentially of a top corner fixture, of the container of FIG. 1;

FIG. 3 is a fragmentary perspective view of a corner unit of either spreader and part of the mechanism for activating the latch housed by the unit;

FIG. 4 is a longitudinal side elevation of the upper or master spreader of FIG. 1;

FIGS. 5 and 6 are longitudinal side elevation and plan views, respectively, of the slave spreader of FIG. 1;

FIG. 7 is a diagram of the hydraulic system which extends through and is carried cooperatively by both spreaders of the foregoing figures; and

FIG. 8 is an electrical diagram for controlling elements of the hydraulic system illustrated in FIG. 6 as carried on a crane, the master spreader, and the slave spreader.

With attention now to FIG. 1, a master spreader **5** of the single point suspension type is suspended from a crane **6** shown with a single cable lift **7** but typifying any type of crane capable of providing single point suspension for a sling-type rigged spreader **5**. The master spreader **5** is of a self-leveling type, and by way of example as illustrated and described herein, utilizes self-leveling mechanism such as disclosed in U.S. Patent No. 3,191,983.

The spreader **5** is basically a rectangular frame of generally planate configuration in the horizontal plane as operatively positioned. Its structure is reinforced by diagonal members arranged in X pattern from corner to corner of its periphery. Corner units **8**, **9**, **10**, and **11** constructed as shown in detail in FIG. 3 form the structure of all four corners of the master spreader **5** as well as the corners of the slave spreader **15**. Each spreader is equipped with six retractable guides **16** which may be of the pantograph type shown in the drawing and disclosed in U.S. Patent No. 3,101,967. These guides are provided for the purpose of bringing a latch **17** of each corner unit (see units **8** to **11** of the master spreader and units **18** to **21** of the slave spreader) into vertical registry with a corresponding receptacle (see receptacle **23** of FIG. 2) forming each of the top corner portions of the container **24**.

A major difference in the master and slave spreader is that the slave spreader **15** has latch receptacles, i.e., receptacles **26**, **27**, **28**, **29**, which correspond in horizontal pattern to the latches of corner units **8** to **11** of the spreader **5**. The receptacles **26** to **29** have apertures **26*a*** to **29*a***, respectively, similar to aperture **23*a*** in FIG. 2. The spreader **15** is necessarily designed with all structure within this pattern of receptacles disposed below the upper surfaces thereof so there is no vertical interference of one spreader with the other when coupling the two spreaders. For example, since actuating mechanism for retracting the guides **16** is conveniently located above the frame portion of the slave spreader, the guides are

attached to the spreader frame longitudinally exteriorly of the region in which the master spreader engages the slave spreader.

The axes of the latches **17** of either spreader may be regarded as disposed within two longitudinal vertical planes and the spacing of such planes of the master spreader is equal to the spacing between corresponding planes of the slave spreader. Hence, apertures **26***a* to **29***a* of receptacles **26** to **29** are disposed within the longitudinal vertical planes which contain the latch axis of corner units **18** to **21** and also within corresponding planes of the master spreader in order to enable coupling of the two spreaders.

As herebefore mentioned, the corner units **8** to **11** (master spreader) and **18** to **21** (slave spreader) are structurally similar taking into consideration the slight differences which differentiate them into "right" and "left." As shown, the corner units **18** to **21** are higher in the vertical direction to dispose rollers **31**, **32** at a greater height with respect to latches of respective corner units. In this manner, more positive guiding action is provided than needed for the master spreader in order to compensate for the greater length and greater loads handled by the slave spreader.

The corner units are rigidly attached to the basic rectangular frame portion of the spreader by means such as welding. As shown, the webs of the beam members of the frame are cut out to permit partial insertion of the units within the outer periphery of the rectangular frame portion. However, each corner unit is substantially outwadly disposed with respect to the outer periphery of the rectangular frame to dispose the axis of rotation of the shafts of latches **17** outwardly with respect to the frame members of the rectangular frame. For example, shaft axes **35** to **37** are located outwardly of the outer periphery defined by the frame members **38**, **39**, **40**, and **41**. As suggested before, receptacle openings **26***a* to **29***a* are disposed also outside of this periphery. Corner units utilizing other types of latches may advantageously follow this general arrangement of the corner units in respect to the rectangular frame.

To understand latch operation and structure, corner unit **10**, shown in detail in FIG. 3, is exemplary except for difference of height in both spreaders. The unit comprises a housing **44**, the latch **17**, rollers **31** and **45** rotatably supported by the housing with portions of their peripheries protruding from one of the two outward facing vertical surfaces, i.e., surface **46**, of the housing, a roller **32** and another lower roller not visible in FIG. 2 also rotatably supported by the housing and protruding from the other outward surface **47** of the housing. The purpose of these rollers is to engage the vertical guide ways of ships or other container-receiving structure. The unit **10** also includes a vertically-aligned rod-like switch actuator **48** supported by the housing in journal-bearing relation therewith but with freedom to move in its vertical or longitudinal direction to actuate a switch **49** of the unit. Switch **49** is disposed within an electrical circuit, as indicated in FIG. 8, to function as a safety device and prevent operation of the spreader in the event the spreader is not squarely engaged with a container or another auxiliary spreader with which interlocking is intended.

The latch **17** and the receptacle **23** are recognizable as standard container couplings structure now adopted as standard by the United States of America Standards Institute, formerly the American Standards Association. As shown, the latch **17** comprises a shaft **51** supported by the housing in both journal and end-bearing relationship whereby the latch is rotatable but has a fixed axial relation with the housing. The latch also has a downwardly tapered head **52** elongated in a horizontal direction and attached symmetrically with respect to a shaft axis, and another crank lever **53**. The housing provides an upper chamber within which the lever **53** is rotatable through at least 90 degrees, and an opening **55** in a longitudinally-facing surface of the housing.

Mechanism for actuating the latch includes a push rod **57** of the turn buckle-type connecting with the lever **53** extending through the opening **55** into connection with the crank arm **58** fixed on a shaft **59** journaled in the frame of the spreader with its axis extending transversely thereof. Latch-actuating mechanism further includes another crank arm **61** attached to the shaft **59** and connected at a desired lever arm with the piston rod of a double-acting cylinder **62**. As shown, the housing of the cylinder is pivotally connected to an element **64** of the spreader frame. The shaft of axle **59** is rotatably supported within the spreader frame adjacent an end thereof and extends substantially through the frame in a transverse direction in order to be connected in operating relation with the latches of both corner units at that end of the spreader. Rotation of the shaft **59** is stopped in one direction at a desired point by a stop **65** fixed to the spreader frame. The stop is engaged by a pad extension **66** of the lever **61** as the actuating cylinder **62** undergoes a contracting stroke.

While the practice of the invention is by no means confined to the use of a master spreader related to a supporting crane by a single point of suspension and provided with a self-leveling facility, the master spreader **5** herein described comprises self-leveling mechanism actuated primarily by a double-acting cylinder **70** having one end anchored to the spreader frame and the other end anchored to a block longitudinally shiftable within the frame of the spreader to which ends of cables **73**, **74**, **75**, and **76** are secured. Portions of the cables extend from a shackle **77** around respective corner pulleys **81** to **84**. Thus, the portions of cables between the shackle and the pulleys may be lengthened at one end of the spreader while shortened at the other end to obtain leveling of the spreader while supporting an unbalanced load. In using a spreader having a single point of suspension from a crane, the self-leveling function of the master spreader is required regardless of whether it is used independently as a container lifter or has attached to it the slave spreader and a container connected therewith. Hence, when the master spreader is of the type illustrated, the cylinder **70** of the self-leveling mechanism is retained operatively within the hydraulic system regardless of the type of service and is not bypassed although that portion of the hydraulic system of the master spreader for operating the latches and the guides may be completely bypassed during operation of the slave spreader and the master spreader in intercoupled relationship. However, leveling of the spreader is not a problem when the crane and master spreader are of the types providing a plurality of points of suspension of the master spreader and the self-leveling mechanism may be dispensed in this instance.

FIG. 7 indicates that the master spreader carries a motor **85**, an oil pump **86** driven by the motor, and a reservoir system including a tank **87**. As the diagram of FIG. 7 shows, the pump is the source of hydraulic power for operation of any hydraulic equipment on the master spreader such as the cylinder **70**, and latch and guide cylinders similar to those carried on the slave spreader. The diagram indicates that the hydraulic system comprises quick-disconnect couplings **88** and **89** in the pressure and return lines **88***a* and **89***a*, respectively, extending between the master and slave spreader. Cylinders **16***a* actuate the guides **16** and are divided into groups of three to which the flow of oil is cycled in one direction or the other by four-connection two-position reverse-flow solonoid valves **91** and **92**. Another similar solonoid operated valve **93** controls the flow in either direction to latch cylinders **62**. Flow regulating valves **94** may be used in association with the valves **81**, **82**, **83**, as shown, to regulate the passage of oil to each cylinder in either stroke of each cylinder. The coupling halves of couplings

88 and 89 are preferably of the commercial type which comprise a valve element which closes the adjacent line upon separation of the halves to prevent escape of liquid from the hydraulic system.

Because of substantial variation which may be adopted in electrical systems for controlling the hydraulic system of the spreaders, FIG. 8 is intended to be schematic without presenting the wiring system in the full detail possible. For example, many lines are gathered into a "cable" and lead out of the cable to a desired electrical device in the diagram of FIG. 8. With certain principals recited hereinbelow, the diagram should be understandable to the skilled without full showing of all circuit portions.

FIG. 8 pertains merely to an electrical control system for operating (1) the cylinder **70** of the tilting or self-leveling mechanism of the master spreader **5**, (2) the cylinders **16***a* of the slave and master spreaders depending on whether the two spreaders are connected, and (3) the cylinders **57** for shifting the latches **17** to latching or unlatching positions. Since a crane ordinarily performs many tasks and thus has an independent control system, the diagram does not include electrical controls for raising and lowering the crane **6**; the diagram thus has reference only to spreaders **5** and **15**.

The electrical system is arranged so that all lines between the operator's station in the crane and the master spreader may be grouped into a single cable suspended from the crane to extend into and out a collector **100** on the master spreader. Except for an unbroken connection **106** to the motor **85** on the master spreader, all pass through quick-disconnect couplings **101** and **102** if the slave spreader is attached to the master spreader. However, if the master spreader is operated independently of the slave spreader, then coupling half **101***a* is coupled with coupling half **102***a* and all lines lead into a main junction box **104** of the master spreader from which circuits are completed to the various solenoids, lights, switches, etc., of the master spreader. The coupling of coupling halves **101***a* and **101***b* is indicated in dotted line.

It will be understood that substantially all circuits have lines which teminate in connector half **101***a*. While connector halves **101***b* (slave spreader) and connector half **102***a* (master spreader) mate or join with connector half **101***a*, selectively in the actual circuits utilized may be achieved in the circuits which are completed through connector halves **101***b* and **102***a* by providing the proper combination of mating terminals of selected circuits within the connector halves **101***b* and **102***a*. In this manner it is possible to utilize a green light **107** and an amber light **108** to indicate "latched" and "unlatched" conditions, respectively, of the latches of the master spreader when used independently but, also, to indicate latched or unlatched conditions of the slave spreaded latches of the slave spreader in a similar manner when the latter is connected with the master. By selective circuit continuation starting within the coupling half **101***b*, the solenoids of solenoid valves controlling the guides and the latches of the master spreader are taken out of the system when the slave spreader is attached thereto. However, the coupling half **101***b* has terminals mating with proper terminals within the coupling half **101***a* to place circuits to the solenoid valves controlling the guides and latches of the slave spreader into such completion as to be operable by a button or switch in the operator's station.

As the diagram of FIG. 8 indicates, a corner unit at each end of both spreaders include a duplex switch (see switch **49** of FIG. 3) which registers the "up" or "down" relationship of the latch with its corresponding receptacle. When switches **110** register rotation of the latches to "latched" condition, a green lamp **107** is illuminated. To energize this lamp, the switches **49** and **110** of all corner units must close in series. In a similar manner, the opening of switches **110**, and the operation of switches **49** to indicate the up condition will energize an amber lamp **108** to indicate a condition of the spreader free of the container wherein it is safe to lift the spreader clear of the container. Lamps **107** and **108** are on the master spreader.

Simultaneously with the conditions which energize either lamp **107** or **108**, lamp **115** or **116**, respectively, within the crane operator's post will also be energized. Simultaneously with the glowing of either lamp **115** or **116**, a corresponding relay switch **117** or **118**, respectively, is energized. The switch portions of these relay switches **117** and **118** are in parallelism within a power circuit not shown for operating the hoist of the crane **6**. The purpose of switches **117** and **118** is safety, i.e., to prevent raising and lowering of the spreader unless all of the latches are either latched or unlatched.

The hydraulic pumping system, which operates regardless of the spreader used, is placed in operation by depressing a start button which energizes the motor **85**, the operation of which is indicated by a lamp **113**. The solenoid valve **93** is spring-loaded to normally force the latches into locked or latching position. A button type switch **122** operates the solenoid valve **93** to rotate the latches to unlatched position which will be maintained as long as the button is depresed. Lamps **107**, **108**, **115**, and **116** are affected by this maneuver as indicated above. Spreader leveling by operation of solenoid valve **124** is effected through operation of a three-position switch **125**. Switches in the control assembly **126** enable separate raising and lowering of the retractable guides **16** of either spreader in two groups. With the slave spreader attached as shown, only the guides of the slave spreader are operated. The circuits for operating the master spreader are temporarily deactivated by construction of the quick-disconnect couplings **101** and **102** with respect to guides.

The foregoing describes spreader equipment now known to be efficient and satisfactory where operations require the handling of cargo containers varying in size and especially in the length thereof. The presently described spreader equipment is especially advantageous in reducing the initial equipment costs.

What is claimed is:

1. Equipment for handling cargo containers of different lengths which have latch-receiving receptacles in the top surfaces thereof comprising a master spreader, at least one slave spreader, latch-and-receptacle means for connecting the master and slave spreaders together as a single container-lifting unit, and latch means on the slave spreader for connecting with containers, said master spreader associated with vertically adjustable means which supports the master spreader and connects it to a support therefor;

electrically responsive actuating means for controlling the latching means on both spreaders;

electrical switch means disposed in an operator station of said equipment and electrical conducting means extending from said station to each of said actuating means, said switch means disposed between an exterior power source and said conducting means, the portion of said conducting means extending between the master and slave spreaders being divided into two cables of conductors of which each cable includes a quick-disconnect means comprising two coupling halves;

said switch and said electrical-conducting means being arranged in circuits of which conductors therefor terminate in a first coupling half at the end of a portion of one of said cables carried by the master spreader;

a portion of the other cable carried by the master spreader terminating in a second coupling half mating with said first coupling half with conductors extending from the second coupling half to various electrically responsive devices of the master spreader, said conductors of the second half being mated with

a first group of selected conductors extending from the second coupling half to various electrically responsive devices of the master spreader, said conductors of the second half being mated with a first group of selected conductors from the first half when the said two halves are joined;

said slave spreader having cable means comprising a third coupling half and a fourth coupling half, said third half being joinable with the first half, and the fourth half being joinable with the second half;

said cable means of the slave spreader comprising conductors mating with a second group of selected conductors terminating in said first coupling half when said spreaders are joined and the first and second coupling halves are joined to the third and fourth halves, respectively, said conductors of the slave spreader then completing circuits to electrically responsive devices of the slave spreader and selected electrically responsive devices of the master spreader.

2. Equipment for handling cargo containers of different lengths which have latch-receiving receptacles in the top surfaces thereof comprising:

a master spreader associated with vertically adjustable means supporting the spreader and connecting the spreader with a support therefor, said spreader having a plurality of latching means horizontally arranged along its under surface for vertical passage into the receptacles of a container of one of said lengths, said latching means being movable to a condition and position, when disposed in said receptacles, preventing withdrawal therefrom;

first actuating means for shifting said latches between a condition for entering said receptacles and said condition preventing withdrawal;

a slave spreader comprising a frame of a length providing an upper surface in which receptacles mating with the latches of the master spreader are arranged in a horizontal and vertical pattern similar to that of said latching means;

said slave spreader having an undersurface in generally parallel coextensive relation with said upper surface and a plurality of latching means projecting from said under surface disposed in a pattern of different horizontal lengths than said first-named pattern to dispose the second latching means for entry into receptacles of a container of correspondingly different length;

second actuating means for the latching means of the slave spreader;

electrical conducting means extending from a power source to an operator station on said support;

separate switch and second electrical conducting means extending from said station to each of said actuating means, the portion of said second conducting means extending between the spreaders being divided into two cables of conductors of which each cable includes a quick-disconnect means comprising two coupling halves;

said switch and said second electrical-conducting means are arranged in circuits of which conductors therefor terminate in a first coupling half at the end of a portion of one of said cables carried by the master spreader;

a portion of the other cable carried by the master spreader terminates in a second coupling half mating with said first coupling half with conductors extending from the second coupling half to various electrically responsive devices of the master spreader, said conductors of the second half being mated with a first group of selected conductors from the first half when the said two halves are joined;

said slave spreader having cable means comprising a third coupling half and a fourth coupling half, said third half being turnable with the first half, and the fourth half being joinable with the second half;

said cable means of the slave spreader comprising conductors mating with a second group of selected conductors terminating in said first coupling half when said spreaders are joined and the first and second coupling halves are joined to the third and fourth halves, respectively, said conductors of the slave spreader when completing circuits to electrically responsive devices of the slave spreader and selected electrically responsive devices of the master spreader.

References Cited

UNITED STATES PATENTS

3,034,659	5/1962	Willison	294—81
3,368,838	2/1968	Reich	294—81
3,151,904	10/1964	Tantunger et al.	294—67
3,191,983	6/1965	Gaglione	294—81
3,272,611	9/1966	Jorgensen	294—65 X

HARVEY C. HORNSBY, Primary Examiner

U.S. Cl. X.R.

212—125; 294—81