CLOSURE FOR PRESSURIZED STRUCTURE

Original Filed July 11, 1967 3 Sheets-Sheet 1

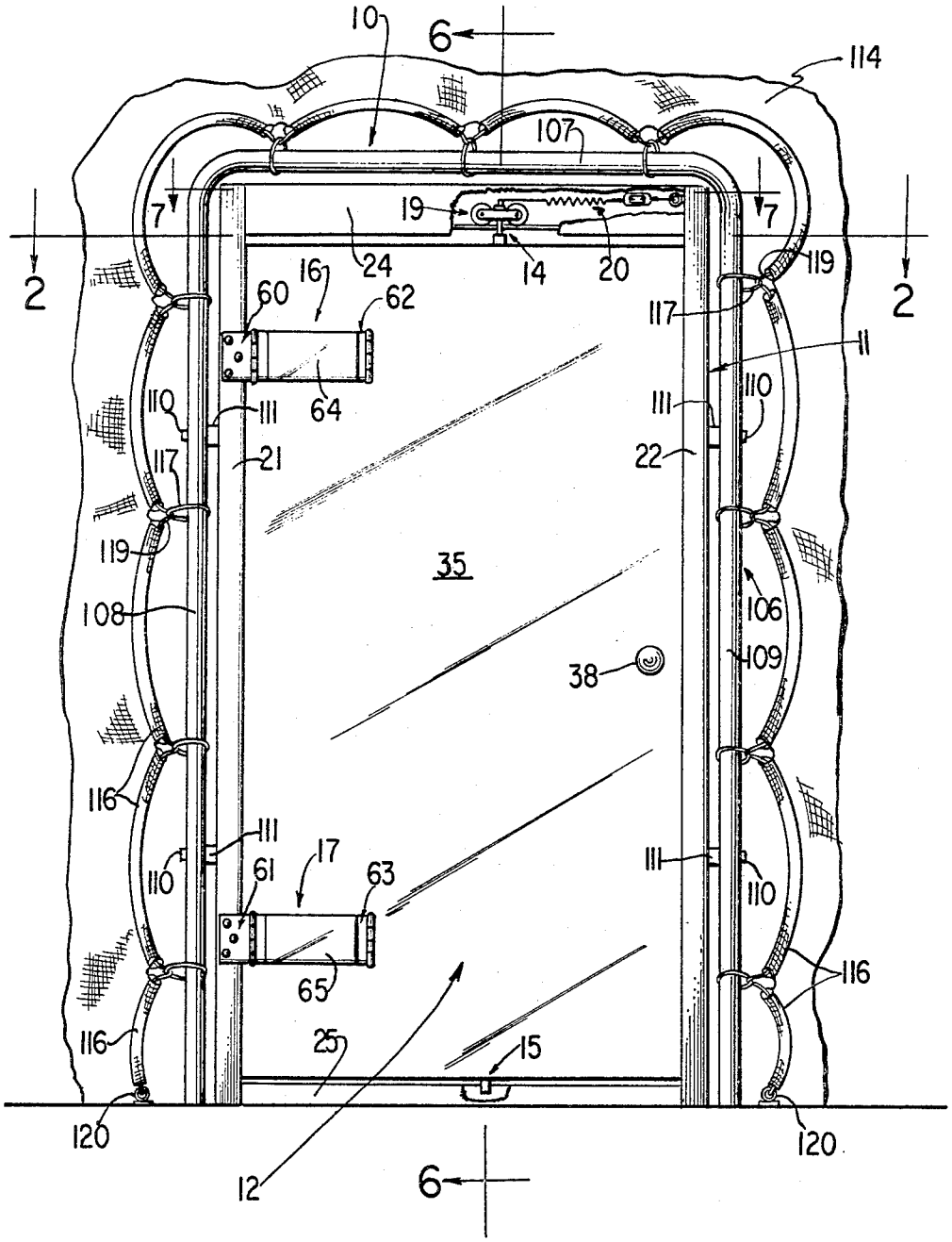

FIG. 1

INVENTOR
DONATO M. FRAIOLI
BY
AGENT

CLOSURE FOR PRESSURIZED STRUCTURE

Original Filed July 11, 1967 3 Sheets-Sheet 2

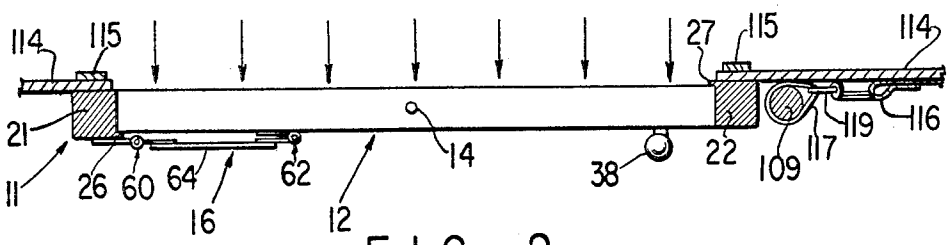

FIG. 2

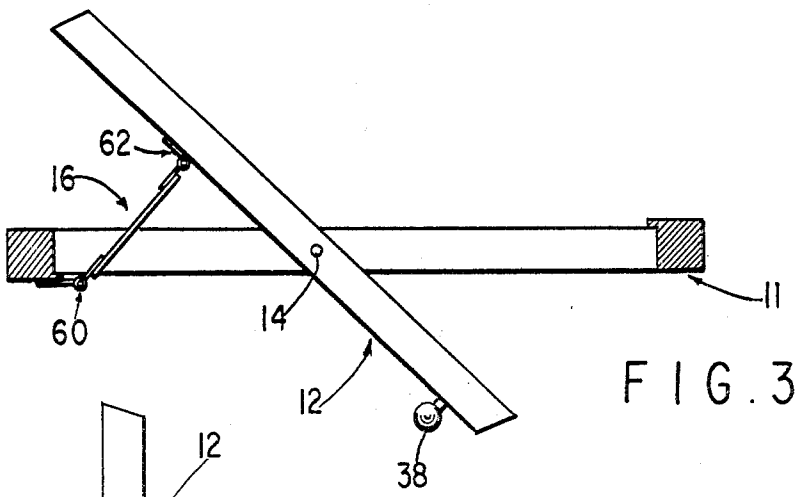

FIG. 3

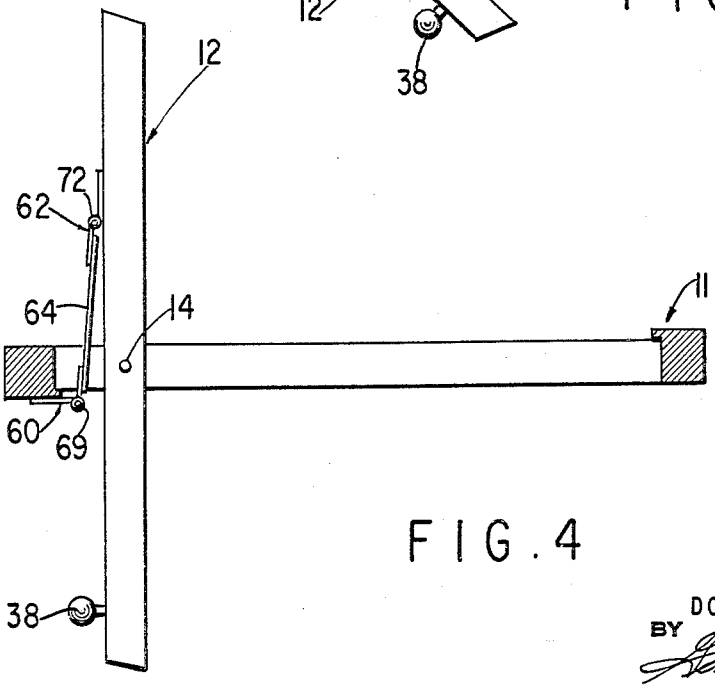

FIG. 4

INVENTOR
DONATO M. FRAIOLI
BY
AGENT

CLOSURE FOR PRESSURIZED STRUCTURE

Original Filed July 11, 1967 3 Sheets-Sheet 3

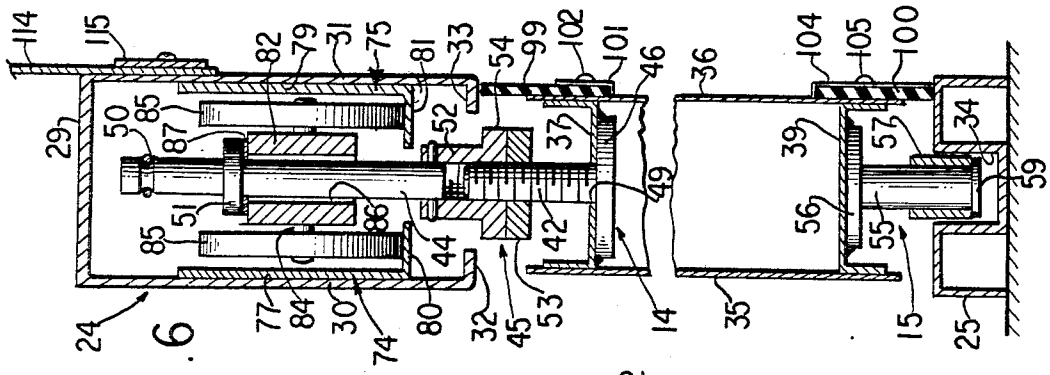

FIG. 6

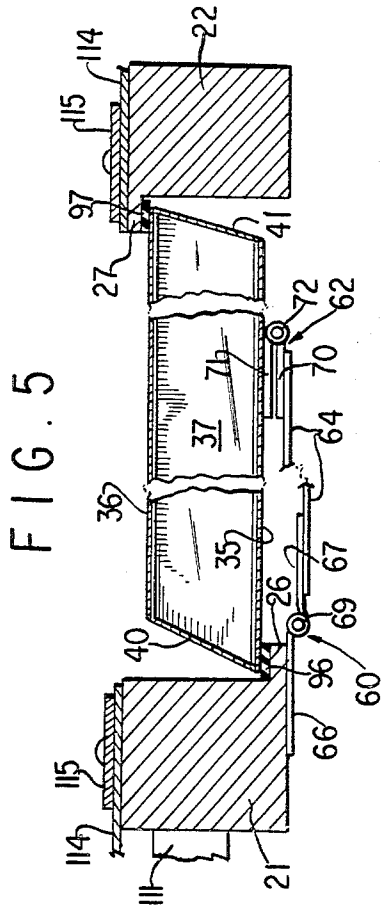

FIG. 5

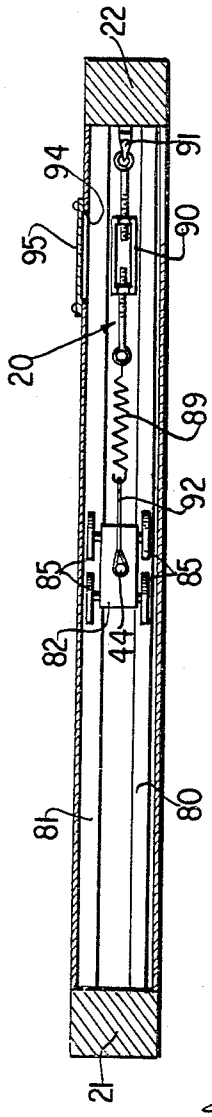

FIG. 7

INVENTOR
DONATO M. FRAIOLI
BY
AGENT

United States Patent Office

3,483,657

Patented Dec. 16, 1969

1

3,483,657

CLOSURE FOR PRESSURIZED STRUCTURE

Donato M. Fraioli, Clifton, N.J., assignor to Air-Tech. Industries, Inc., Clifton, N.J., a corporation of New York

Continuation of application Ser. No. 652,461, July 11, 1967. This application Feb. 20, 1969, Ser. No. 809,451
Int. Cl. E05d *15/30*
U.S. Cl. 49—252 2 Claims

ABSTRACT OF THE DISCLOSURE

A closure for a pressurized structure including a frame connected to the structure, a door carried by the frame provided with a vertically oriented pivot fixed to the top of the door and seated in a horizontally traveling hanger within the top of the frame, a pair of hinges attached to one side of the frame, a pair of hinges attached to the door between the hinge side of the frame and the axis of the pivot, and a pair of links each interconnecting one of the frame hinges to one of the door hinges so that upon opening, the door rotates about the pivot and simultaneously moves laterally toward the hinge side of the frame.

This application is a continuation of Ser. No. 652,461, filed July 11, 1967, and now abandoned.

BACKGROUND OF THE INVENTION

Field of the invention

The present invention relates to closures for pressurized structures and more particularly to doors for structures comprising a fabric shell which is supported by maintaining an above atmospheric air pressure within the structure.

Description of the prior art

Air supported structures of the type for which the present closure is primarily intended, comprise a fabric shell which is attached and sealed to the ground and is inflated by pumping air into the structure until the pressure within the structure is on the order of five (5) pounds per square foot greater than the atmospheric pressure surrounding the structure. The pressure within the structure lifts and supports the fabric shell to provide a usable structure. Each of these structures is provided with at least one personnel door fitted into the fabric wall to allow people to walk in and out of the structure.

In the past, these personnel doors have consisted of a conventional door mounted to swing either inwardly or outwardly. Such doors have proven to be quite unsatisfactory. When an inwardly swinging door is used, the air pressure within the structure makes opening of the door difficult. At normal operating pressures, the air pressure aginst a conventional 30" x 78" door exerts a force of about 80 pounds against which the door must be moved upon opening. Also, on closing, the door must be held to prevent violent slamming. Under high wind conditions the pressure in the building is increased from 5 to 8 pounds per square foot to maintain the structure rigid, and consequently the force of the door increases to 130 pounds making the door extremely difficult to use.

A door arranged to swing outwardly opens easily but has a number of other disadvantages. A strong latch must be provided to hold the door against the pressure; it is difficult to close the door against the pressure, particularly from the inside; opening of the door from the outside can be dangerous because upon releasing the latch the door swings violently outwardly unless restrained by the user; and if the door is not properly closed, or if the latch fails, the door swings open and

2

remains in the open position allowing a continuous flow of air from the structure.

SUMMARY

Accordingly, it is an object of the present invention to provide a closure for pressurized structures which is not subject to the foregoing disadvantages.

Another object is to provide such a closure which requires a minimum of effort to operate.

Another object is to provide such a closure which is held in its closed position by the pressure within the structure.

Another object is to provide such a closure which is self closing.

Other and further objects of the invention will be obvious upon an understanding of the illustrative embodiment about to be described, or will be indicated in the appended claims, and various advantages not referred to herein will occur to one skilled in the art upon employment of the invention in practice.

In accordance with the present invention the foregoing objects are accomplished by providing a closure for use between an outside space at one pressure and an inside space at a higher pressure including in combination a movable closure member for permitting access between the spaces, a frame for supporting the movable closure member, first pivot means on the movable closure member defining an axis about which said movable closure member rotates, a hinge asesmbly including a rigid link member extending from adjacent the frame toward the axis, first hinge means hinging one end of the link member to the frame, and second hinge means hinging the other end of the link member to the movable closure member, the first and second hinge means having hinge lines parallel with this axis, and second pivot means in said frame cooperating with the first pivot means to define the position of the axis with respect to the frame, the second pivot means being formed to permit the position of the axis to shift as the movable closure member is rotated about the first pivot means and the first and second hinge means.

BRIEF DESCRIPTION OF THE DRAWINGS

A preferred embodiment of the invention has been chosen for purposes of illustration and description, and is shown in the accompanying drawings, forming a part of the specification wherein:

FIG. 1 is an outside view in elevation of a closure in accordance with the present invention installed in an air supported building.

FIG. 2 is a sectional view taken along the line **2—2** on FIG. 1.

FIG. 3 is a view similar to FIG. 2 showing the door in a partially open position.

FIG. 4 is a view similar to FIGS. 2 and 3 showing the door in the fully open position.

FIG. 5 is an enlargement of portions of FIG. 2 showing details of construction.

FIG. 6 is a sectional view taken along the line **6—6** on FIG. 1 illustrating the construction of the pivot and hanger assemblies.

FIG. 7 is a sectional view taken along the line **7—7** on FIG. 1 illustrating the details of the door closing assembly.

DESCRIPTION OF THE PREFERRED EMBODIMENT

Referring to the drawings in detail, a closure **10** for a pressurized structure is shown which generally comprises a frame **11**, a door **12** supported by the frame, an upper pivot assembly **14** fixed to the top of the door, a lower pivot assembly **15** fixed to the bototm of the door, an

upper hinge assembly **16** and a lower hinge assembly **17** interconnecting the door and the frame, a horizontally sliding hanger assembly **19** housed in the frame, and a door closing assembly **20** operating upon the upper pivot assembly **14**.

The frame **11** includes a vertical left side member **21**, a vertical right side member **22**, a top member **24**, and a bottom member **25**. As shown in FIGS. 2 to 5, the left side frame member **21** is provided with a door engaging flange **26** on the low pressure side of the closure and the right side frame member **22** is provided with a door engaging flange **27** on the high pressure side of the closure. The top frame member **24**, as best shown in FIG. 6, is a downwardly facing U-shaped member having a top wall **29** and side walls **30** and **31**. The side walls **30** and **31** are provided at their lower edges with inwardly extending horizontal flanges **32** and **33** respectively. The bottom frame member **25** is provided with a longitudinal groove **34** for receiving the lower pivot member **15**.

Referring to FIGS. 5 and 6, the door **12** includes an outside wall **35** in communication with atmospheric pressure, an inside wall **36** in communication with the interior pressure of the building, an upwardly facing U-shaped top edge member **37**, a downwardly facing U-shaped bottom edge member **39**, and flat side edge members **40** and **41**. The door is provided with a door knob **38** and may also be provided with a suitable lock if desired.

The pivot assemblies **14** and **15** are positioned to the right of the center of the door **12** and define a vertical pivot axis about which the door rotates.

The upper pivot assembly **14** includes a bolt **42** and a rod **44** joined together by an adjustable interconnecting device **45**. The bolt **42** comprises a large head portion **46** welded to the lower surface of the top edge member **37** and a screw threaded rod portion **47** extending upwardly through a hole **49** provided in the member **37**. The rod **44** extends vertically between the side walls **30** and **31** of the top frame member **24** and is provided with a groove **50** adjacent its upper end and an annular flange **51** below the groove **50**. The adjustable interconnecting device **45** includes an internally threaded sleeve **52** and a lock nut **53**. The sleeve **52** is pinned to the bottom end of the rod **44** and is provided with an enlarged hexagonally shaped formation **54** at its lower end to receive a wrench. The locknut **53** and the sleeve **52** are threaded onto the rod **47**.

The lower pivot assembly **15** includes a rod member **55** having a large flat head portion **56** welded to the door edge member **39**, and loose fitting plastic bushing **57** positioned on the rod **55** to reduce friction and retained by an enlargement **59** formed at the lower end of the rod.

The hinge assemblies **16** and **17** include respectively a hinge **60**, **61** attached to the side frame member **21**, a hinge **62**, **63** attached to the wall **35** of the door and a flat bar shaped link **64**, **65**. In the hinge assembly **16**, which is shown in detail in FIG. 5, the hinge **60** includes a leaf **66**, a leaf **67** and a barrel **69** hinging the leaves **66** and **67** together;and the hinge **62** includes a leaf **70**, a leaf **71**, and a barrel **72**. The leaf **66** is screwed to the frame member **21** and the leaf **71** is screwed to the wall **35** of the door. The leaf **67** and the leaf **70** are welded to opposite ends of the bar **64**.

Referring to FIG. 4, the length of the link **64** is selected so that the distance between the barrel **69** and the barrel **72** is equal to the distance from the pivot **14** to the barrel **72** (measured along the edge of the door) plus the perpendicular distance from the line along which the pivot moves to the barrel **69**. The hinge assembly **17** is similarly constructed.

The hanger assembly **19** includes a pair of L-shaped track members **74** and **75**, and a trolley **76** riding on the track members. The track members each have a vertical leg **77**, **79** respectively and a horizontal leg **80** and **81**, respectively. The vertical legs **77** and **79** are respectively attached to the inside surfaces of the side walls **30** and **31** of the top frame member **24** and the horizontal legs extend toward each other and are separated by a large enough space to accommodate the rod **44**.

The trolley, as shown in FIGS. 1, 6 and 7, inside a block **82**, a pair of axles **84** extending through the body, and four wheels **85** mounted on the axles. The block **82** is provided with a vertical bore **86** for receiving the rod **44** of the pivot assembly **14**. The weight of the door is transmitted through the pivot assembly **14** to the trolley **76** by means of the flange **51**. A washer **87** is positioned on the rod **44** between the top of the block **82** and the flange **51** to allow the rod **44** to rotate with respect to the block during the operation of the door.

The door closing assembly **20**, as best shown in FIG. 7, includes a spring **89** and a turnbuckle **90** connected together between the rod **44** and the right side frame member **22**. The turnbuckle **90** is attached to the frame member by means of a hook **91**, and the spring **89** is attached to the rod **44** by means of a metal cable **92**. The cable **92** has one end looped about the rod **44** (and seated in the groove **55**) and has its other end looped about the end of the spring.

The wall **31** of the top frame member **24** is provided with an opening **94** through which the turnbuckle can be adjusted. A plate **95** is removably mounted to cover the opening **94**.

To provide an air seal around the door, vertically extending strips **96** and **97** are cemented to the frame flanges **26** and **27** (FIG. 5) and horizontally extending sealing strips **99** and **100** are respectively secured to the top and bottom edges of the inside wall **36** of the door (FIG. 6). The sealing strip **99** is secured to the door by means of a retaining strip **101** and screws **102** and is positioned so that its upper edge contacts and seals against the flange **33**. The sealing strip **100** is similarly secured by means of a retaining strip **104** and screws **105** so that its lower edge contacts and seals against the lower frame member **25**.

The frame **11** is supported by a U-shaped pipe support **106** having a horizontal top member **107** and vertical sides **108** and **109** extending below the surface of the ground and preferably embedded in concrete. The frame **11** is secured to the pipe support **106** by means of four bolts **110** which extend through the sides **108** and **109** of the pipe support and through spacers **111** into the side members **21** and **22** of the frame.

The pressurized structure shown in FIGS. 1 and 2 is of the air inflated type such as disclosed in U.S. Patent No. 2,939,467 and has a fabric shell **114** which is supported by maintaining the pressure within the structure above atmospheric pressure. As shown in FIGS. 2, 5 and 6, the fabric **114** is secured to the top and sides of the door frame **11** by means of metal strips **115** which are screwed to the frame to sandwich the fabric between the frame and the strip.

The tension in the fabric **114** due to the inflation of the building or wind loads is transferred directly to the pipe support **106** by means of a cable system including a series of arcuate pockets **116** sewn to the fabric **114** around the pipe support, a series of short cables **117** encircling the pipe support **106**, and a cable **119**, threaded through the pockets **116** and through the loops formed by the cabels **117**. The ends of the cable **119** are secured to anchors **120** embedded in the ground at the sides of the closure.

In operation, when the interior of the structure containing the closure **10** is pressurized and when the door **12** is in the closed position, the pressure within the structure acts on the door to hold it in the closed position. Since the vertical pivot axis defined by the pivot assemblies **14** and **15** is positioned to the right of the center line of the door, the door area to the left of this axis is somewhat greater than the area to the right of the axis. The pressure acting on the inner surface of the door thus tends to rotate the door counter clockwise (as viewed in FIG.

2) against the flanges **26** and **27** on the frame **11**. If, for example, the pivot assemblies are positioned 17 inches from the left edge of a 30-inch wide door having a height of 78 inches, then the closing force exerted against the door is about 11 pounds when the pressure in the building is 5 pounds per square foot above atmospheric and 17 pounds when that pressure is 8 pounds per square foot. Of course the pivot assemblies can be located to increase or decrease the closing force as desired.

To open the door **12** from the outside, the knob **38** is pulled to rotate the door clockwise about the pivot axis. As the door rotates clockwise, the hinge links **64** and **65** rotate counter-clockwise, and the door is drawn to the left (as shown in FIG. 3) causing the trolley **76** to roll along the tracks **80**, **81** and causing the rod **55** to slide in the groove **34**. Air from within the structure flows out from both the left and right sides of the door and acts on both surfaces of the door to equalize the pressure forces upon the door. As the door continues to open, its rotation and movement toward the left continues until it assumes the position shown in FIG. 4.

The leftward motion of the pivot assembly **14** that accompanies the opening of the door causes the stretching of the spring **89** of the door closing mechanism **20**. When the door is released, the spring **89** pulls the pivot assembly to the right and the hinge assemblies **16** and **17** cause the door to rotate counter-clockwise to bring it back toward the closed position. As the door approaches the closed position, the pressure within the structure again becomes effective and pushes the door into the fully closed position.

The turnbuckle **90** is preferably adjusted so that no significant tension is placed in the spring (upon opening the door) until the door approaches a position similar to that of FIG. 3 where the effect of the pressure on the door is partially equalized. Thus adjusted, the closing mechanism **20** brings the door back to the position where the pressure within the structure completes the closing operation.

The adjusting mechanism **45** is utilized to vertically position the door with respect to the frame so that the seals **99** and **100** are effective and so that the rod **55** clears the bottom of the groove **34**.

The space between the flange **32** of the upper frame member **24** and the upper edge of the door wall **35** is sufficient to accomodate an open end wrench, and the hexagonal formation **54** and the lock nut **53** of the mechanism **45** are positioned to be accessible through this space. The vertical position of the door can thus be adjusted while the door is in place.

It will be seen from the foregoing that the present invention provides an improved closure for pressurized buildings which is held in the closed position by the pressure within the structure, is self closing, and yet requires only a minimum effort to operate.

As various changes may be made in the form, construction and arrangement of the parts herein, without departing from the spirit and scope of the invention and without sacrificing any of its advantages it is to be understood that all matter herein is to be interpreted as illustrative and not in any limiting sense.

I claim:

1. A closure for use between an outside space at one pressure and an inside space at a higher pressure including in combination a movable closure member permitting access between the spaces, a frame for supporting said closure including first and second vertical side members and upper and lower horizontal members, said lower horizontal member being provided with an upwardly facing slot having sides and a bottom extending lengthwise thereof, said upper member being generally U-shaped and facing downwardly, a track within said upper member extending lengthwise thereof, a hanger assembly mounted on said track including roller means riding on said track, an upper pivot assembly extending vertically upwardly from said closure member for supporting and guiding said closure member, a lower pivot assembly extending vertically downwardly from said closure member part way into said slot to only guide said closure member, said pivot assemblies defining a vertical axis about which said movable closure member rotates, said upper pivot assembly including a first member secured to said closure member and a second member engaging said hanger assembly and a third member adjustably interconnecting said first and second members for vertically positioning said closure member to space the end of said second pivot assembly from the bottom of said slot, said second member being provided with means for permitting free rotation between said upper pivot assembly and said hanger assembly, said upper horizontal frame member being spaced from said closure member and said third pivot member being positioned between said upper frame member and said closure member to be accessible for adjustment, a rigid link hinge member extending from adjacent said first vertical frame members toward said axis, first hinge means hinging one end of said link member to said first vertical frame member and second hinge means hinging the other end of said link member to said movable closure member, said first and second hinge means having hinge lines parallel with said axis to shift said axis toward said first vertical frame member as said closure is rotated about said axis, said axis being spaced from the vertical centerline of said closure member so that the fluid pressure on the closure member tends to hold the closure member in the closed position.

2. A closure according to claim **1** including spring means in said upper frame member operatively connected between said hanger assembly and said frame for imparting a force to said closure member at said axis in a direction toward said second vertical frame member when said closure is open so as to return said closure member to the closed position.

References Cited

UNITED STATES PATENTS

2,019,527	11/1935	Ellison	49—252
2,059,143	10/1936	Renwick	49—251 XR
2,565,383	8/1951	Linebaugh	49—177
3,247,617	4/1966	Catlett	49—252 XR

KENNETH DOWNEY, Primary Examiner