MECHANISM FOR AUTOMATICALLY FEEDING, LOADING, AND SEALING BAGS

Filed April 27, 1967 3 Sheets-Sheet 1

FIG. 1

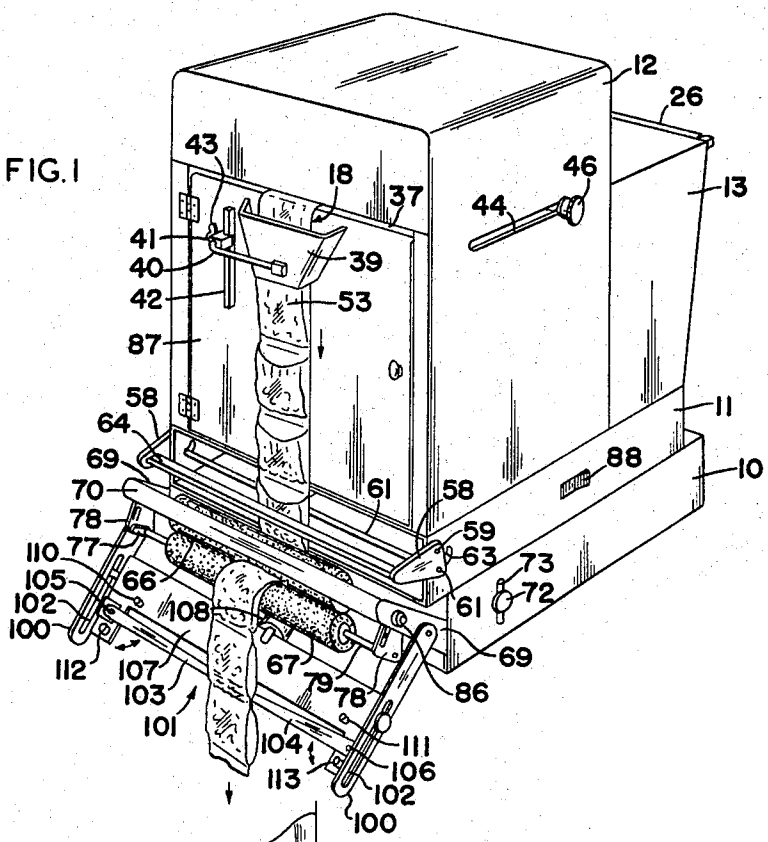

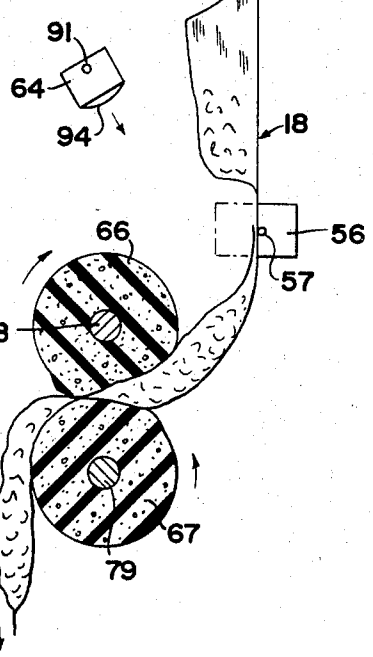

FIG. 6

INVENTOR.
BERNARD LERNER

BY Watts, Hoffmann, Fisher & Heinke
ATTORNEYS.

MECHANISM FOR AUTOMATICALLY FEEDING, LOADING, AND SEALING BAGS

Filed April 27, 1967 3 Sheets-Sheet 2

FIG.2

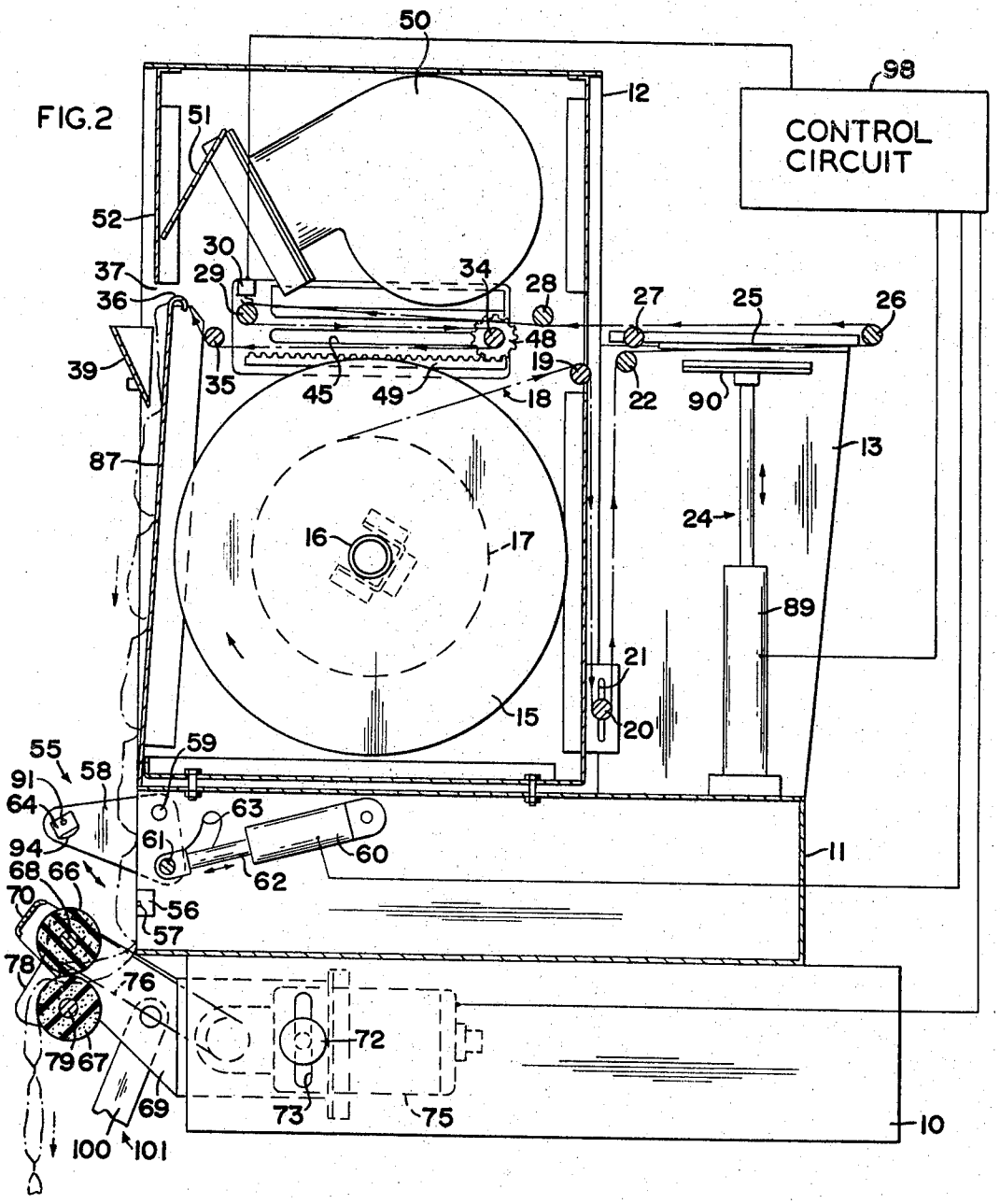

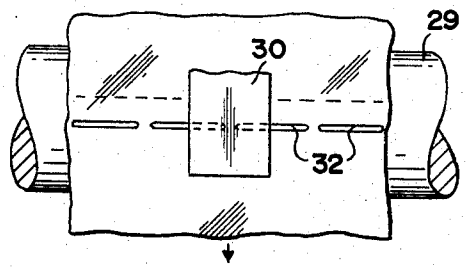

FIG.3

INVENTOR.
BERNARD LERNER
BY Watts, Hoffmann, Fisher & Heinke
ATTORNEYS.

MECHANISM FOR AUTOMATICALLY FEEDING, LOADING, AND SEALING BAGS

Filed April 27, 1967 3 Sheets-Sheet 3

FIG. 4

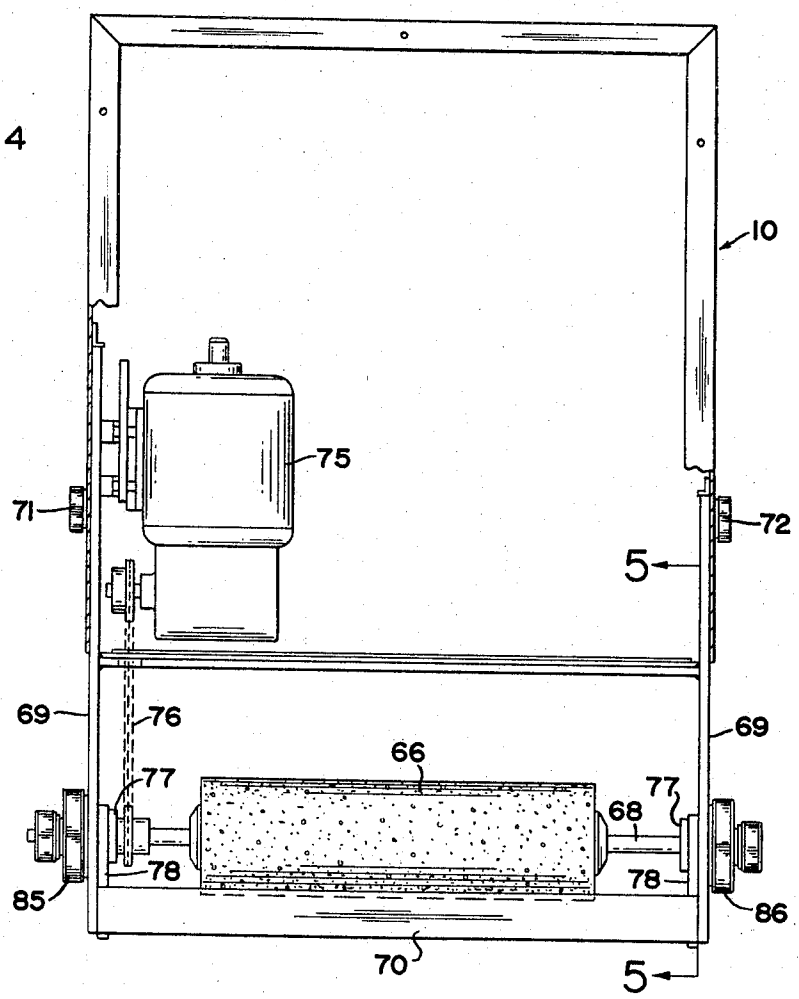

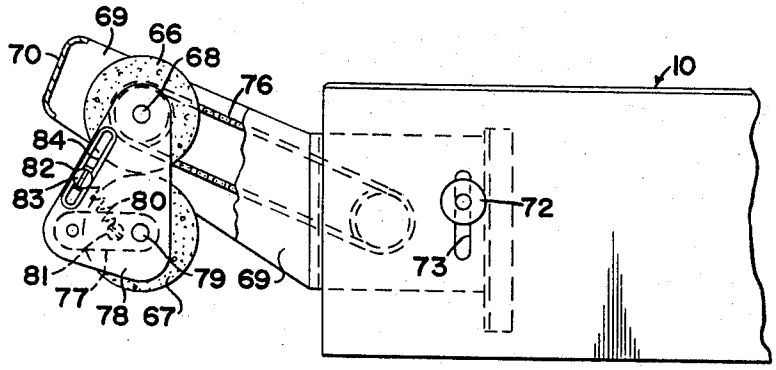

FIG. 5

INVENTOR.
BERNARD LERNER
BY Watts, Hoffmann, Fisher, & Heinke
ATTORNEYS.

United States Patent Office

3,477,196

Patented Nov. 11, 1969

1

3,477,196
MECHANISM FOR AUTOMATICALLY FEEDING, LOADING, AND SEALING BAGS

Bernard Lerner, Hudson, Ohio, assignor to Automated Packaging Corporation, a corporation of Ohio

Filed Apr. 27, 1967, Ser. No. 634,242
Int. Cl. B65b 7/02, 7/06, 51/16
U.S. Cl. 53—44 21 Claims

ABSTRACT OF THE DISCLOSURE

Apparatus which automatically feeds a selected one of a chain of bags to a bag closing station, and automatically brings upper portions of a loaded bag for closure.

RELATED APPLICATIONS AND PATENTS

(1) United States Letters Patent No. 3,254,828, issued June 7, 1966, to Hershey Lerner, entitled "Flexible Container Strips."

(2) United States Letters Patent No. 3,254,468, issued June 7, 1966, to Hershey Lerner, entitled "Method of Packaging Articles."

(3) "Method and Apparatus for Feeding Bags of a Chain," filed by Hershey Lerner et al. on Apr. 27, 1967, Ser. No. 634,251.

BACKGROUND OF THE INVENTION

Field of the invention

In the two referenced patents to Hershey Lerner there is the disclosure of a chain of open bags and a process of loading such bags. These bags in the chains taught in these patents are open, each bag having one face connected as by perforations, to each bag having one face connected as vanced, closed end first, to a loading station. At the loading station each bag is opened by a stream of air, a product is inserted into the open bag, and thereafter the loaded bag is sealed and separated from the chain.

The most successful commercial mechanism for loading and sealing bags of the type taught in the Lerner patents has a housing in which a coil or festoon of connected bags is positioned. The connected bags are fed through an outlet opening. The blower in the housing directs a stream of air through that opening so that as each bag is brought out of the opening and moved to a loading station it is inflated. A product is inserted into each opened bag at the loading station. Once the operator has inserted the product, the operator advances the chain to bring the next bag to the loading station. The operator manually separates the loaded bag from the chain in the same advancing operation. The loaded bag is then hand-inserted into the jaws of a heat sealer and the heat sealer is activated to close on the bag and seal it.

When bags are connected along one face in a chain but the other face is open, once a bag is loaded all distortion of the bag at the opening is concentrated in the open face. This is true because with the other face still connected to a chain of bags, it is maintained straight in its original, preloaded condition. Because of this characteristic of the open face being distorted and pulled downwardly by a product within the bag, automatic closing as by heat sealing of the opening is difficult. This is true because the top portions of the two faces of the bag are out of registration.

It will be apparent that the feeding, loading, and sealing operations attendant to packaging in bags are greatly facilitated by having the bags connected together in a chain since, among other advantages, complicated stripping and feeding mechanisms required with a supply of individual bags are eliminated. While this is true, the material handicap to the economc use of chains of bags in relatively high volume applications in the past has been this problem of registering the opening so that a neat closure of the bag can be effected.

2

Prior art

The solutions to this problem of lack of registration of the top portions of a loaded bag has normally been to separate the bag from the chain, manually stretch the top of the bag to bring the two top portions into registration and then hand-insert the registered top into a sealer, stapling machine, or other closing mechanism. Attempts have been made at inserting feelers or fingers into a bag to stretch it while a seal is effected.

With such an approach it is difficult to remove the fingers and a complete seal cannot be obtained. Moreover, it is difficult to obtain a good seal from one finger to the other unless the seal bar is so short as to go between the fingers. If the seal bar is so sized, it is necessary to change to a different sized bar each time a change is made to a different bag width.

SUMMARY OF THE INVENTION

With the present invention, a discovery has been made that obviates this problem of registering the top portions of a bag for closure. The discovery is advantageous where a single bag is being closed but most advantageous in an automatic device designed for filling and closing bags in a chain.

In the preferred form of the invention, a chain of bags is fed between a pair of soft, deformable feed rolls. These feed rolls are actuated to advance the chain of bags so that the bags are sequentially and one at a time first brought to a loading station and then to a sealing station. A perforation-sensing apparatus such as that disclosed in the above-referenced co-pending application of Hershey Lerner et al., is used to stop the actuation of the feed rolls when two bags are respectively in the loading and sealing stations.

It has been discovered that if a feed mechanism is oriented with respect to the sealing station such that one face of the bag is fed faster than the other, the top portions of the bag are brought into registration. In the disclosed arrangement the connected face of the bag is, in addition to being fed faster, tensioned and preferably curved, and simultaneously the more slowly fed disconnected face of the bag is flexed with pressure of the product being in part taken off the front face and transferred to the back face. This brings the top portions of the faces automatically into good registration in the closing station. A heat sealing or other closing operation can then be automatically effected with very good results.

It has been further discovered that by adjusting one feed roll orbitally about the other and adjusting the relative horizontal and vertical spacing of the feed rolls and heat station, bags of a wide variety of sizes and products of a wide variety of weight and bulk, can be accommodated and good registration can nonetheless be obtained of the top portions of the open and loaded bags.

The use of one or two soft feed rolls has other advantages in addition to feeding the faces at relatively differing speeds which can of itself be accomplished in other ways. These include expelling air from the bag so that the package when completed is flat.

Another feature of this arrangement is that when a bag with loose "pourable" products is curved around the feed rolls, the loose products are trapped in the bag and cannot spill out as the top portions of the bag are brought into registration.

The apparatus of the present invention also includes a clamping apparatus which can also serve as an imprinter so that bags fed from a chain of bags can be marked as

to part number or the like, loaded, sealed, and separated from the chain, all fully automatically with consistent high-quality results being obtained.

The apparatus also includes adjustments so that the bags, irrespective of the length of the bags in a selected chain, are automatically registered appropriately at both the loading and sealing stations.

Another feature of the invention is that if the chain of bags breaks, feeding of bags obviously stops. Since feeding stops cycling of the heat sealer, a coupled automatic loader and other operations also stop. This occurs since cycling of the machine is actuated by the sensor and the sensor is actuated by sensing perforations between bags as they move past the sensing station.

Accordingly, the objects of the invention are to provide a novel and improved apparatus for and method of sealing bags of a chain of bags.

Other objects and a fuller understanding of the invention may be had by referring to the following description and claims taken in conjunction with the accompanying drawings.

DESCRIPTION OF THE DRAWINGS

FIGURE 1 is a perspective view of the automatic loading and sealing apparatus of this invention;

FIGURE 2 is a side elevational view on an enlarged scale with respect to FIGURE 1 and with parts broken away and removed;

FIGURE 3 is a greatly enlarged view of the feed control sensing roller and a gap sensing mechanism with a chain of bags positioned therebetween;

FIGURE 4 is a top plan view of the base of the mechanism with parts broken away and removed for clarity;

FIGURE 5 is an enlarged fragmentary sectional view of a feed roll structure as seen from the plane indicated by the line 5—5 of FIGURE 6; and,

FIGURE 6 is an enlarged schematic view showing a chain of loaded bags, the action of the feed rolls, and the action of the heat sealing mechanism.

DESCRIPTION OF THE PREFERRED EMBODIMENT OF THE INVENTION

Referring now to FIGURES 1 and 2 a base structure is shown generally at **10**. As will be described in greater detail below, the base structure houses the automatic feed mechanism and the prime mover for operating that mechanism.

A seal frame **11** is mounted on the base **10** and carries the mechanism for effecting a heat seal of loaded bags. Thus, the seal frame **11** is the structure which establishes a bag closing station.

A supply housing **12** is mounted on the seal frame **11**. A clamp and imprinter housing **13** is also mounted on the seal frame **11** and is rearward of the supply housing **12**.

Referring now to FIGURE 2, a supply spool **15** is provided. The supply spool **15** is mounted on a mandrel **16** suitably positioned in the supply housing **12**. The mandrel **16** supports the supply spool **15** for rotation. The supply spool **15** carries a container strip in the form of a coiled chain of bags with the coil indicated by the dotted lines at **17**. The chain of bags are preferably polyethylene or similar material and of the type described more fully in the above-referenced patents to Hershey Lerner. The portion fed from the coil **17** is indicated by the line **18**.

The chain of bags **18** is fed from the spool **15** over a supply housing idler roller **19**. The chain **18** is then fed downwardly and reeved around an inertia compensating roller **20**. The inertia compensating roller **20** is mounted in vertical slots **21**, only one of which is shown, for vertical movement as the feed of the chain of bags is started and stopped. Thus, as the feed starts, the inertia roller **20** will be pulled upwardly as the rest inertia of the spool **15** is overcome and it commences to rotate. Similarly, when the feed is stopped and the inertia of rotation of the spool **15** tends to continue to feed bags, the inertia compensating roller **20** will drop, maintaining tension on the bag until the spool **15** comes to rest.

The chain of bags **18** is fed upwardly from the inertia-compensating roller **20** around a first clamp station idler roller **22**. The chain is then fed between a clamp shown generally at **24** and a clamp plate **25**. The chain **18** is then fed around a second clamp station idler roller **26** and forwardly past idler rollers **27, 28**.

The chain **18** is then fed around a sensing station idler roller **29**. A perforation sensor shown generally at **30** is positioned above the sensing station idler roller **29** and adapted to sense the presence of weakened portions such as perforations connecting two adjacent bags. These perforations are indicated in very greatly enlarged scale at **32** in FIGURE 3. The purpose and operation of this sensing will be explained in greater detail in the section on operation which follows.

The strip **18** is fed rearwardly from the sensing station idler roller **29** and around a load station adjustment idler roller **34**. The strip **18** is fed from the load station adjustment idler **34** under an outlet guide roller **35**. The strip **18** then passes over an outlet guide lip **36** and through a bag outlet opening **37** in the supply housing **12**.

Referring again to FIGURE 1, a funnel **39** is provided. The funnel **39** is mounted on an arm **40**. The arm **40** has a bracket **41** which mounted the arm **40** on a track **42**. A setscrew **43** is provided to clamp the funnel **39** in a vertically adjusted position. The funnel **39** establishes a load station.

Once the funnel **39** is in a vertically adjusted position and the lead one of a chain of bags has been fed along the path thus far described and downwardly through bag closure and feed roll stations as well be described presently, it is necessary to orient the bag openings into the load station. This is accomplished by adjusting the length of that portion of a strip of bags extending between the sensing station defined by the sensing roller **29** of the sensor **30** and the load station located by the funnel **39**. Adjustment of this length is accomplished by shifting the load station adjustment idler roller **34** horizontally along guide tracks **44**, FIGURE 1, and **45**, FIGURE 2.

Horizontal adjustment of the load station adjustment idler roller **34** is accomplished by loosening a clamp nut **46**, FIGURE 1, and then shifting the idler horizontally as a pinion **48** moves along a rack **49**. The pinion is mounted on, but rotatable relative to, a shaft included in the load station adjustment idler **34**. Thus, the idler **34** is journaled on the pinion but the pinion locates the idler horizontally. Once the load station adjustment idler **34** is in a selected position, the clamp nut **46** is tightened to lock the idler **34** in that position.

A blower **50** is mounted within and near the top of the supply housing **12**. The blower **50** is oriented to direct air toward the outlet opening **37**. A baffle **51** diverts air downwardly toward that opening, and the lip **36** is spaced inwardly from upper face plate **52** of the housing, so that the flow of air coming out of the housing is directed somewhat downwardly into the load station. The orientation of the load station is such that the opening of the bag succeeding that bag, **53**, FIGURE 1, in the load station is still within the housing so that the air actually helps to hold the succeeding bag flat.

The chain of bags **18** extends downwardly from the loading station through a bag closure station shown generally at **55**. In the disclosed embodiment, bag closure is effected with a heat sealer. This sealer includes a fixed sealing member **56** mounted on the seal frame **11**. A sealing member **56** includes a hot wire, or other heating mechanism, **57** which is energized at an appropriate time in the cycle for effecting a heat seal. A pair of pivotal arms **58** are provided. The arms **58** are pivotal about pivots **59**, FIGURES 1 and 2, on actuation of a sealer fluid motor **60**. The sealer fluid motor **60** is pivotally connected at **61** to one of the arms so that whenever piston rod **62** of the sealer motor is withdrawn, the pivot **59** is pulled toward

the motor **60** causing it to swing upwardly in arcuate track **62** and pivot the pivotal sealer arms **58** downwardly. This pivoting of the sealer arms **58** brings a clamp bar **64**, which extends between the arms **58**, into compressive engagement with the fixed sealing member **56**. This clamps the top portions of two bag faces together and effects a heat seal between the faces.

Cooling passages indicated at **91** may be provided in the fixed bar **64**, to cool, subsequent to the heating cycle, a sealed bag and provide strength for the subsequent feeding action. Similarly, this strength may be provided by forming an intermittent seal in the bag being sealed. One effective way of accomplishing this is by wrapping a thread around pad **94** on the clamp bar **64** so that spaced lines are not sealed and maintain their original strength. If the bag to be sealed is not properly oriented vertically in the sealing station, this can be adjusted by moving the container housing **12** up or down as by placing shims between the sealer frame **11** and the supply housing **12**.

Driven and idler feed rolls **66, 67** are provided and define a feed station. The driven feed roll **66** is mounted on a shaft **68**. The shaft **68** is journaled in a pair of feed roll support brackets **69** which extend forwardly and upwardly from the base **10**. The feed roll support brackets **69** also carry a shield bar **70** which serves the dual purpose of strengthening the brackets **69** and protecting the mechanism from accidental contact by an operator or the like.

The driven and idler feed rolls are soft, deformable material preferably such as an expanded polyethylene or other plastic. This permits a loaded package to be passed between the rollers even though the rollers are in substantial juxtaposition. In addition to smoothly orienting the top portions of the faces of a bag in the manner to be described presently, this has the advantage of expelling excess air from the package so that the package is flat and compact when completed.

The feed roll brackets **69** are vertically adjustable to vary the vertical spacing of the feed rolls **66, 67** relative to the bag closing station **55**. This is accomplished by loosening feed roll adjustment nuts **71, 72** and raising or lowering, to the appropriate height, the feed roll support brackets **69** in guide slots **73**, FIGURE 2, only one being shown. The nuts **71, 72** are then tightened to secure the feed rolls in their vertically adjusted position.

A feed motor **75** is mounted on one of the brackets **69** and vertically adjustable with it. The feed motor **75** is connected as by chain **76** to the feed roll shaft **68** to cause rotation of the driven feed roll **66**.

The idler feed roll **67** is mounted on a pair of pivotal links **77**. One of the links **77** is shown in dotted lines in FIGURE 5 and the other is visible in FIGURE 1. The pivotal links **77** are pivotally mounted on a pair of spaced feed roll support plates **78**. An idler feed roll support shaft **79** extends from one of the links **77** to the other and is journaled in them. Springs **80**, only one of which is shown, extend from a connection indicated at **81** on each link **77** to an adjustable connection **82**. The adjustment of the connection **82** is accomplished by a setscrew **83** which secures the connection **82** at an appropriate place in slot **84** in the idler feed roll plate **78**.

The idler roll **67** is orbitally adjustable about the driven roll shaft **68**. The idler roll **67** is clamped in its orbitally adjusted position by nuts **85, 86**.

A unique mechanism for separating one bag from another, after the bags have been loaded and sealed, is shown in FIGURE 1. A bag separator is provided which includes a pair of downwardly and outwardly extending arms **100**. A bag separating mechanism shown generally at **101** is supported on the arms and adjustably positionable by sliding the mechanism **101** along adjustment slots **102** in the arms **100**. The bag separating mechanism includes a pair of fingers **103, 104** which are pivotally mounted at **105, 106**. The fingers **103, 104** overlap somewhat and are positioned close to the path which loaded and sealed bags travel.

A finger actuating plate **107** is mounted on air cylinder **108** for reciprocal movement in a horizontal path. The air cylinder **108** is actuated by the same signal from the sensor **30** which actuates the sealer, stops the motor, actuates the brake **24** and an automatic feeder if it is provided.

On actuation, the air cylinder **108** reciprocates outwardly at a relatively high rate. Pins **110, 111** mounted on the plate **107** strike the fingers **103, 104** at positions quite close to the pivot points **105, 106** respectively. This causes the fingers **103, 104** to pivot outwardly at high speeds, striking a bag with high velocity. The fingers strike a central portion of a perforation and then continuing their arcuate paths strip outwardly from that separate portion quickly and neatly severing a loaded bag from the chain. Because of the high-speed movement of the fingers **103, 104**, very little movement of the chain of bags hanging from the feed rollers is experienced. On return of the plate **107** to its retracted position, frictional projections **112, 113** of rubber or similar material engage the fingers and return them to the parked position shown in FIGURE 1.

As indicated in FIGURE 2, a counter may be provided. If one wishes chains of five loaded bags, as an example, the counter will count five signals from the sensor **30** and then actuate the air cylinder **108**.

It should be noted that while the disclosed apparatus has been described in detail to show its coaction, the apparatus is modular in form. This modular construction permits other bag feeding mechanisms, for example, to be used in combination with the sealer and the feed rolls and other types of sealers, such as the type which seals and separates in a single application of heat, to be readily used.

OPERATION

In operation, door **87** forming the front of the supply housing **12** is open and the supply spool **15** and the mandrel **16** are mounted within the housing. The strip **18** of connected-but-open bags is fed over the idler roll **19**, under the inertia-compensating idler roll **20** and thence over the first clamp station idler roll **22**. The strip is fed past the clamp station between the clamp **24** and the clamp plate **25** around the second clamp station idler roller **26** and then forwardly. The strip is fed above the idler roll **27** and below the idler roll **28** to the position-sensing station. The strip is fed around the sensing-station idler roller **29** and below the perforation sensor **30**, thence rearwardly around the load station adjustment idler **34**, under the outlet guide idler roller **35** and over the outlet lip **36**. The strip is then fed downwardly through the load station, then through the sealing station **55** and then between the feed rollers **66, 67**.

To start the mechanism cycling, an on-off switch **88** (FIGURE 1) is moved to the "on" position. This energizes the motor **75** to drive the driven feed rolls **67** and advance the strip **18**. The strip will continue to advance until the sensor **30** detects the presence of perforations in the sensing station. This stops the motor **75**. If the position of the adjustable idler roller **34** is proper, one of the bags will be positioned immediately below the funnel **39** while the succeeding bag will still have its opening within the container as indicated in FIGURE 1. The position shown in FIGURE 2 is an intermediate position where the bags are feeding after a loading operation has been performed.

If the position of the bag at the load station is not proper, the adjustable rollers **34, 35** may be shifted forward and rearward until the bag to be loaded is properly oriented at the load station. It should be noted that refinements in this adjustment can be made as the machine is in operation without affecting the continuous operation. At this time, the air coming from the blower **50** through the opening **37** will inflate the bag at the load station while tending to blow the succeeding bag closed in order that the products to be packaged may be either manually or auto-

matically dumped into the funnel **39** which funnels them into the open bag.

Substantially simultaneously with the stopping of the motor **75**, clamp cylinder **89** of the clamp **24** will be energized. This drives a movable clamp plate **90**, which may be an imprinter, upwardly and the strip of bags **18** between the clamp plates **90**, **25**. The clamp serves as a brake to prevent the chain of bags from drifting downwardly due to the weight of products in the loaded bags.

Simultaneously with the stopping of the feed motor **75** and the actuation of the clamp **24**, the dumping, where automatic, can be signalled. Also simultaneously with this, the sealer motor **60** will be energized to bring the sealer clamp bar inwardly against the bag located in the sealing station, Further, the hot wire **57** will be simultaneously energized and the bag separating motor **108** will be actuated.

Control circuits, shown generally at **98** include a timer. After a predetermined time for a heat seal operation, the sealer motor **60** will be actuated to open the sealer. Simultaneously, the clamp **24** will be released and the feed motor **75** will be started again the advance the chain **18** until the sensor **30** senses the next perforation. The cycle will then repeat.

The idler feed roller may require orbital adjustment about the driven feed roller **66**. For example, if the product being packaged is long and thin such as a pencil, very little curvature of the bag being sealed can be accommodated. Accordingly, the idler roller will be orbited counterclockwise from the position shown in FIGURE 2. Conversely, where a relatively bulky product is involved, it has been found that the idler roller may require orbiting to a position clockwise with respect to that shown in FIGURE 2. The correct orbital adjustment depends on both the length of the bag and the bulk of the product being packaged in addition to the configuration of that product. In addition, relative horizontal and vertical adjustment of the feed rollers relative to the heat station is at times required. Horizontal adjustment is effected by simply sliding the seal frame **11** backwards and forwardly on the base **10**. Vertical adjustment is obtained in the manner previously described by loosening the feed roll position nuts **71**, **72** and raising or lowering the feed roll assembly as is required.

While the action which registers the top portions of the faces of the bag being packaged is not fully understood, it is believed that the curving effect of that bag results in the movement of the back face of the bag relative to the front to bring the top portions of the bag into registration. In the disclosed arrangement the rear and still-connected face of the bag is tensioned and curved, substantially arcuately, while simultaneously pressure of the product is taken off the front face and applied to the back face. This results in a relaxing of the front face relatively, and an equal distribution of the forces tending to distort the top of the bag. It has been found that once properly adjusted, the trial and error adjustment is required for each type bag and product, the top portions of the bag will repetitively and accurately register to produce a smooth and high-quality finished seal. The finished chain of bags may be either left as a connected chain of loaded bags or may be manually or automatically separated into individual bags.

The device has other, not readily apparent, advantages. Since the bags pass through the feed rolls only as they are brought into and then removed from the sealing station, and since orientation of the entire chain of bags is by the sensor **30** before the bags commencing either the loading or sealing operations, any break in the chain of bags will stop operation of the machine until the operator arrives to correct it. The machine is also totally safe because the heat seal is well shielded and because even if one in feeding the strip between the feed rolls should get his hand between them, the operator cannot be hurt because of the very soft nature of the rolls.

Although the invention has been described in its preferred form with a certain degree of particularity, it is understood that the present disclosure of the preferred form has been made only by way of example, and that numerous changes in the details of construction and the combination and arrangement of parts may be resorted to without departing from the spirit and the scope of the invention as hereinafter claimed.

What is claimed is:

1. In a packaging apparatus including structure for supplying to a load station, one at a time, bags each having one face disconnected from an adjacent bag and another secured to the adjacent bag such that the bags are connected together in a chain, mechanism to open a bag at said load station and a sealer, the improved apparatus for positioning a loaded bag in position for sealing comprising:

(a) a pair of rotatable feed rolls positioned below said sealer and adapted to feed a loaded bag therebetween; and

(b) roll support means positioning the rolls other than symmetrically about an extension of a path of bag travel through said sealer such that a path of bag travel from the sealer through the rolls is curved, thereby tensioning the connected face of a loaded bag held between the rolls, and flexing upwardly toward the sealing station the disconnected face of such bag whereby to align the top of the disconnected face with the top of the connected face in said sealing station.

2. The apparatus of claim **1** wherein at least one of the rolls is a soft, cylindrical roll.

3. The apparatus of claim **2** wherein the rolls are of foamed plastic material.

4. The apparatus of claim **1** wherein said support means includes a feed roll adjustment means and said adjustment means is adapted to adjust one of said feed rolls orbitally about the other.

5. A packaging apparatus comprising in combination:

(a) a housing defining a space for storing a chain of interconnected bags and an outlet opening through which such chain may be fed;

(b) gas supply means associated with said chamber for causing a flow of gas through said outlet opening;

(c) said housing including loading structure establishing a loading station external of said housing and positioned such that gas emitted through said opening will open a bag positioned in the station;

(d) guiding structure within said housing establishing a path of bag travel from the space through the opening to the loading station;

(e) closing means establishing a bag closing station and including means to close a loaded bag with an open end disposed in the closing station; and,

(f) bag positioning means near the closing station for tensioning one face of the loaded bag and removing pressure from the other face thereby registering the portions of the bag faces adjacent the openings with one another whereby the portions can be secured to one another to close the bag.

6. The combination of claim **5** wherein said bag positioning means dispels air from the loaded bag as it registers said portions.

7. The combination of claim **5** wherein said bag closing means is a heat seal mechanism.

8. In the combination of claim **5**, a sensing mechanism connected to a feed mechanism whereby operation of the device is controlled by the sensing mechanism, indicating one bag has reached the load station and another the seal station.

9. The combination of claim **8** wherein the sensing mechanism is sensitive to a change in current flow.

10. The combination of claim **5** wherein said bag positioning means comprises a pair of feed rolls.

11. The combination of claim **10** wherein one of the feed rolls is orbitally adjustable with respect to the other.

12. The combination of claim 10 wherein said feed rolls and the bag closing means are relatively adjustable both vertically and horizontally.

13. The process of closing a loaded one of a chain of interconnected bags wherein the loaded bag has one face connected to an adjacent bag and another face separated therefrom comprising:

(a) moving the loaded bag along a path of travel to position portions of said faces to be connected together in a bag-closing station;

(b) tensioning said connected face while in part moving the separated face longitudinally of the path of travel until said portions are oriented by flexing the separated face and pressing material in the bag against the connected face; and

(c) connecting the portions together.

14. The process of claim 13 wherein the connected face is curved and is tensioned.

15. The process of claim 13 wherein air is expelled from the bag simultaneously with the tensioning of said connected face and the flexing of the separated face.

16. The process of claim 13 wherein said tensioning of the connected face and flexing of the separated face is accomplished with a pair of soft rolls by passing the loaded bag between the pair of rolls.

17. In a packaging apparatus including structure for supplying to a load station, sequentially, bags each having at least one face at least partially disconnected from an adjacent bag and each bag is secured to the adjacent bag such that the bags are connected together in a chain, and a closure mechanism defining a closure station, the improved apparatus for positioning a loaded bag in position for closing comprising:

(a) a pair of rotatable feed rolls positioned near said closure mechanism and adapted to feed a loaded bag therebetween; and

(b) roll support means positioning said rolls such that a path of travel from the closure station through the rolls is a curved path and a selected face of the loaded bag is shifted relative to the other face of a loaded bag held therebetween whereby to register the tops of the faces in said closure station.

18. A packaging apparatus comprising in combination:

(a) bag supply means for supplying a chain of interconnected bags to a loading station;

(b) bag opening means at the loading station for opening bags of the chain as they are fed to the station;

(c) closing means establishing a bag closing station spaced from the loading station and including means to close a loaded bag with an open end disposed in the station; and

(d) bag positioning means near the closing station for moving one face of the loaded bag longitudinally of a path of bag travel relative to the other face prior to closure thereby registering the portions of the bag faces adjacent an open end with one another whereby the portions can be secured to one another to close the bag.

19. Apparatus for closing a loaded bag comprising:

(a) bag closure means establishing a bag closing station; and

(b) bag positioning means near said closing station and including means to feed portions of an open end of the bag into the load station while simultaneously causing relative movement of the faces of the bag including movement longitudinal of a path of bag travel whereby to bring said portions into registration for a bag closing operation.

20. The apparatus of claim 19 wherein a structure establishes a path of bag travel to the closing station and wherein the positoining means comprises a pair of feed rolls and roll support means positioning the roll axes at non-symmetrical locations with respect to an extension of said path.

21. A packaging apparatus comprising in combination:

(a) bag supply means for supplying a chain of interconnected bags to a loading station;

(b) bag opening means at the loading station for opening bags of the chain as they are fed to the station;

(c) closing means establishing a bag closing station spaced from the loading station and including means to close a loaded bag with an open end disposed in the station; and

(d) bag positioning means near the closing station for tensioning one face of the loaded bag and removing pressure from the other face thereby registering the portions of the bag faces adjacent the openings with one another whereby the portions can be secured to one another to close the bag.

References Cited

UNITED STATES PATENTS

2,612,738	10/1952	Salfisberg	53—29
3,200,560	8/1965	Randall	53—112 X
3,269,087	8/1966	Cloud et al.	53—29 X

TRAVIS S. McGEHEE, Primary Examiner

U.S. Cl. X.R.

53—22, 29, 187, 373

PO-1050
(5/69)

UNITED STATES PATENT OFFICE
CERTIFICATE OF CORRECTION

Patent No. 3,477,196 Dated November 11, 1969

Inventor(s) Bernard Lerner

It is certified that error appears in the above-identified patent and that said Letters Patent are hereby corrected as shown below:

Column 1, line 33 (line 3 of the first paragraph under the section "Field of the Invention") delete "These", first occurrence, substitute - - The - -

Column 1, line 35, delete "bag each having one face connected as" substitute - - adjacent bag. The bags are ad- - -

(The entire sentence, when corrected, should read as follows: "The bags in the chains taught in these patents are open, each bag having one face connected as by perforations to each adjacent bag. The bags are advanced, closed end first, to a loading station.")

Column 4, line 33, delete "well" substitute - - will - -

Column 7, line 22, delete "the" first occurrence, substitute - - to - -

SIGNED AND
SEALED
MAY 26 1970

(SEAL)
Attest:

Edward M. Fletcher, Jr.
Attesting Officer

WILLIAM E. SCHUYLER, JR.
Commissioner of Patents