Oct. 21, 1969 J. BOWMAN 3,473,737

APPARATUS FOR GUNNING REFRACTORY MATERIAL HAVING ADJUSTABLE NOZZLE POSITIONING MEANS

Filed March 9, 1966

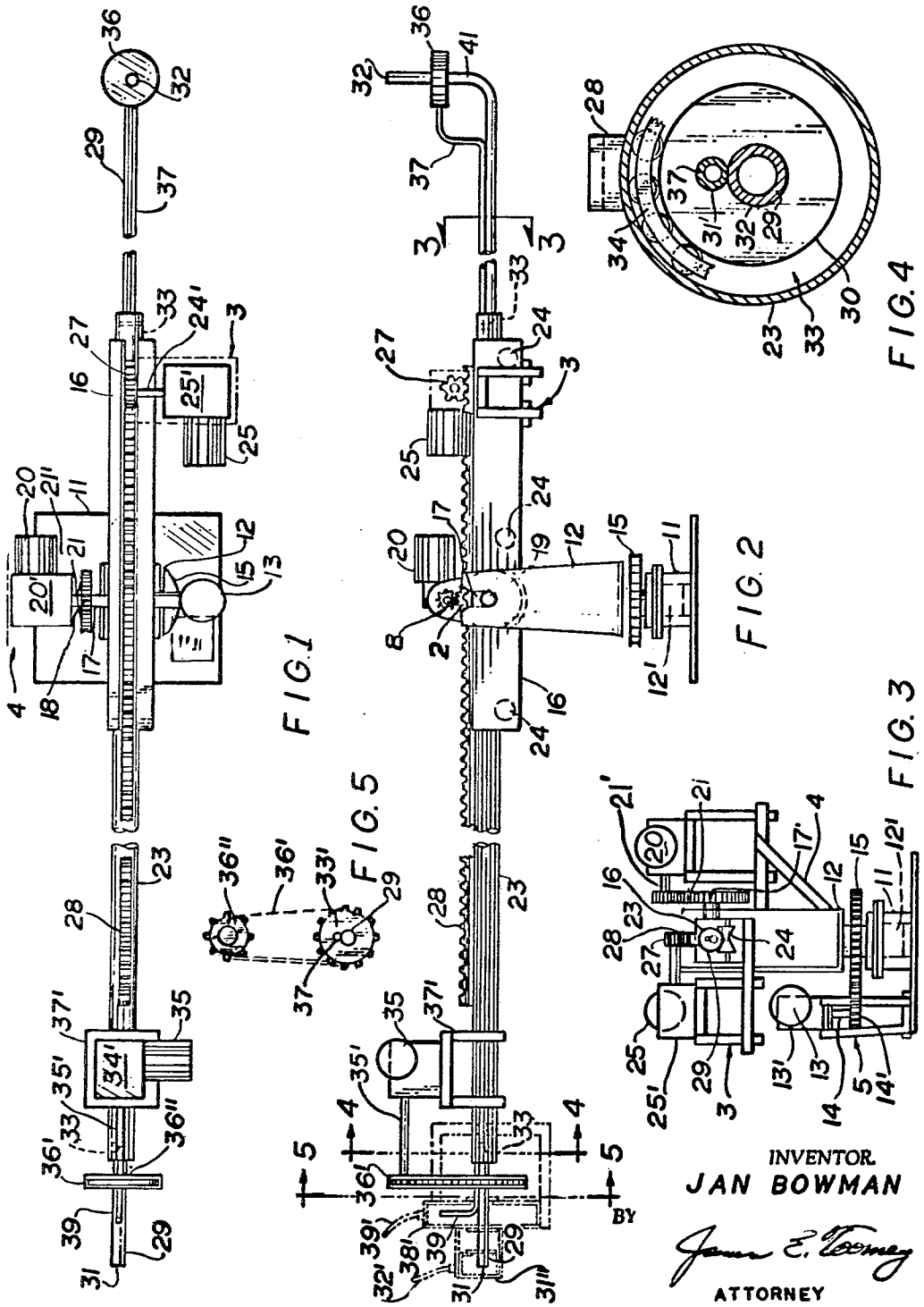

FIG. 1

FIG. 2

FIG. 3

FIG. 4

FIG. 5

INVENTOR.
JAN BOWMAN

BY James E. Toomey

ATTORNEY

United States Patent Office

3,473,737

Patented Oct. 21, 1969

1

3,473,737

APPARATUS FOR GUNNING REFRACTORY MATERIAL HAVING ADJUSTABLE NOZZLE POSITIONING MEANS

Jan Bowman, Los Gatos, Calif., assignor to Kaiser Aluminum & Chemical Corporation, Oakland, Calif., a corporation of Delaware

Filed Mar. 9, 1966, Ser. No. 532,938
Int. Cl. B05b *3/18, 9/06;* A62c *31/24*
U.S. Cl. 239—187 5 Claims

ABSTRACT OF THE DISCLOSURE

An apparatus for gunning refractory material onto the interior of a furnace, for example an oxygen converter, comprising means for supporting a gunning lance, moving it, and fixing it in position about one vertical axis and two horizontal axes at right angles to each other, as well as longitudinally along its axis.

This invention relates to an apparatus for lining the interior of an industrial furnace with refractory material. More particularly, it is concerned with an improved arrangement for controlling the operation and movements of an apparatus for lining the interior of an industrial furnace, such as an oxygen steel converter or furnace.

Although "gunnable" refractories have been used in the past in the initial construction and repair of industrial furnaces, including those employed in the basic oxygen steelmaking process, wherein molten steel is refined within a converter vessel by blowing a stream of oxygen onto the surface of the molten metal, the equipment used for applying these "gunnable" refractories has not been entirely satisfactory. In the past, only make-shift type devices have been employed due to the limited amount of space within which the equipment had to operate and a considerable amount of time has been involved in setting up and dismantling the equipment.

Ideally, a gun for projecting fluent refractory material onto a furnace wall should project the material at right angles to the furnace wall and at the optimum distance to minimize rebound and dusting and to place the maximum amount of material on the furnace wall with maximum density.

Accordingly, it is a primary purpose of the instant invention to provide an improved refractory gunning apparatus of simplified design which overcomes the deficiencies of prior gunning equipment, which is extremely flexible in its use, and, finally, one which permits proper admixing of fluent refractory material with water just prior to ejection of the gunning material from the apparatus. The instant apparatus also projects the refractory material onto the furnace lining at the optimum angle, no matter what part of the furnace is involved, and at the optimum distance from the furnace wall.

Other purposes and advantages of the instant invention will become apparent from a review of the following detailed description when taken in conjunction with the appended drawing which shows a preferred form of apparatus that can be used in carrying out the teachings of the instant invention wherein:

FIG. 1 is a broken plan view of an apparatus according to the invention with certain parts broken away and with other parts being shown in dotted lines;

FIG. 2 is a broken side elevational view of the apparatus of FIG. 1 with parts removed and with other parts shown in dotted lines;

FIG. 3 is a front sectional view taken generally along the line 3—3 of FIG. 2 with parts added and other parts removed for the sake of clarity;

2

FIG. 4 is an enlarged sectional view taken generally along line 4—4 of FIG. 2 and with parts removed; and

FIG. 5 is a schematic view generally taken along the line 5—5 of FIG. 2 with parts removed.

The apparatus of the instant invention generally comprises a base **11** on which is mounted a rotatable pedestal **12** provided with a shaft **12'** which fits in suitable bear-

The apparatus of the instant invention generally comprises a base **11** on which is mounted a rotatable pedestal **12** provided with a shaft **12'** which fits in suitable bear-

ings (not shown) in an opening in base **11**. Base **11** is located in an appropriate position on the floor of a building housing the furnace to be serviced (said furnace not being shown) and in close proximity to the furnace. As indicated in FIG. 3, appropriate means for controllably rotating pedestal **12** is attached to base **11**. This means can comprise a motor **13** attached to brackets **5** affixed to base **11**. Motor **13** drives pedestal **12** through a reduction transmission **13'**, shaft **14**, spur gear **14'** and a main gear **15** attached to shaft **12'** of pedestal **12**.

An elongated cradle **16** is supported by pedestal **12**. In the embodiment illustrated, cradle **16** is supported by means of pins or trunnions **17** and **17'** which rest in recesses **19** in the sidewalls of pedestal **12**. Thus, cradle **16** is mounted on pedestal **12** so it is rotatable about a horizontal axis relative to pedestal **12**. Pivotal movement of cradle **16** on pedestal **12** can be effected by a power means which includes a suitable motor **20**. Motor **20** is appropriately attached to the bracket mounting **4** affixed to pedestal **12** and rotates cradle **16** through a reduction transmission **20'**, shaft **21'**, spur gear **18** and main gear **21** attached to the outer end of pin **17'**.

A carrier **23**, preferably in the form of a hollow, elongated pipe, is slidably mounted on cradle **16** by means of a series of grooved rollers **24**. Mounted on one end of cradle **16**, such as the front end, is an appropriate means for controllably moving or sliding carrier **23** longitudinally with respect to cradle **16**. This means generally comprises a motor **25**. Motor **25** is attached by bracket mounting **3** to cradle **16**. Motor **25** operates through a reduction transmission **25'**, shaft **24'**, spur gear **27** and a rack **28** attached to carrier **23** to drive or move carrier **23** fore and aft.

A pipe **29**, together with a water hose **37**, is mounted within carrier **23** for conducting fluent refractory material. As indicated particularly in FIGS. 2 and 4, water hose **37** and pipe **29** are mounted in suitable keeper assemblies **33** located within the carrier **23**. The keeper assembly comprises a holder disc **30** provided with openings **31'** and **32** for receiving the hose **37** and pipe **29** respectively. Disc **30** is then disposed within a suitable ball race **34**.

As indicated in FIG. 5, discs **30** along with pipe **29** and hose **37** are rotated within carrier **23** by means of a gear **33'** within which the pipe **29** and hose **37** are mounted. Gear **33'** is connected by a gear chain **36'** to a gear **36''** driven by a shaft **35'** connected to a motor **35** by means of a reduction transmission **34'**. Motor **35** and transmission **34'** are mounted on carrier **23** by a bracket mounting **37'**.

During rotation of pipe **29** and hose **37**, connection is maintained with the sources of supply of fluent refractory material and water (not shown) by means of appropriate manifold boxes, or headers, the entry end **31** of pipe **29** being sealably mounted in header **31''** connected to a supply of refractory material by a flexible conduit **32'** and the entry end **39** of hose **37** being sealably mounted in header **38'** connected to a source of water by a flexible conduit **39'**. Headers **31''** and **38'** are affixed by conventional brackets shown in dotted lines in FIG. 2 attached to carrier **23** and arranged on carrier **23** so as not to interfere with gear chain **36'** or gear **33'**.

In an advantageous embodiment of the invention, the fluent refractory material and water can be admixed prior to ejection from the gunning apparatus by a suitable water ring **36** after which the admixed material is ejected from nozzle **32** connected to ring **36**. Other arrangements for conveying the water to mixer **36** can be used; for example, the water can be conveyed in a pipe concentrically disposed about the pipe carrying the dry fluent refractory, and thus provide water cooling of that pipe. The admixing means can take any appropriate form depending on the results desired. For example, it can be a water ring of the type shown in U.S. Patent 2,392,408, issued Jan. 8, 1946 to Radonich. It will be understood that water ring **36** is constructed so as to provide means, for example, internal ports, for admixing water entering through hose **37** with fluent refractory material entering through pipe **41**.

Preferably the device for admixing water and fluent refractory material is placed in the right angle portion **41** of pipe **29** since admixture at this point minimizes clogging and permits the use of a refractory composition which will form a strong, dense, erosion resistant lining.

It will be understood that oxygen steel vessels, for use with which this apparatus is particularly adapted, are generally in the form of a pear-shaped barrel which is open at the top and closed at the bottom. They are mounted on trunnions on opposite sides so as to be tiltable about a horizontal axis and the vessel can be tilted sideways so that entrance may be had by a generally horizontal member. Thus, in the present instance, the pedestal **12** and base **11** would be located adjacent a vessel (not shown) in such a fashion whereby when the vessel was tilted the pipe **29** and hose **37** could be injected through the open mouth of the vessel and into the proper gunning position within the vessel.

In making use of the apparatus of this invention to line an oxygen vessel with refractory material, the nozzle or exit end **32** of pipe **29** is manipulated so as to be injected into the oxygen vessel by controlled use of the various motor means aforementioned and appropriately positioned so that it will project refractory material from the desired distance and at the proper angle against the lining of the vessel which is to be repaired or installed. Thereupon, controls (not shown) are operated to cause the fluent refractory material and water to flow through the apparatus and the gunning operation commenced.

From the above, it will be noted that the nozzle **32** can be simultaneously rotated while being moved in one or more planes whereby for all practical purposes the nozzle can be advantageously directed against any given wall area within the vessel. Thus, the gunning device can be said to have a movement in substantially all directions relative to a furnace lining whereby the innermost reaches of the vessel can be lined or repaired.

It is an advantage of the apparatus of this invention that with it, it is possible to place gunned refractory material within a furnace so that it is projected at the optimum angle and from the optimum distance and at almost any advantageous angle. This results in better adherence, better density, and better strength and erosion resistance in the placed refractory, all of which is effected in a simple yet controlled fashion and, due to the aforementioned motor controls, the nozzle has almost universal movement relative to the interior of the vessel being worked on and while located within the vessel. Also, it is an advantage of this apparatus that it enables the mixing of the water with the refractory material at a time just prior to projection of the refractory material onto the wall, so that a refractory composition of optimum formulation for gunning can be used. Thus, use of this apparatus obviates the necessity of premixing the refractory with an excessive amount of water in order to form a slurry which can be conveyed through pipes and hoses. However, it will be understood that the apparatus of this invention can be used with a premixed slurry if desired.

What is claimed is:

1. An apparatus for lining the interior of an industrial furnace with refractory material, said apparatus comprising in combination:

(a) a pedestal rotatable about a vertical axis;

(b) common means for controllably rotating said pedestal and for maintaining it in a fixed rotational position;

(c) a cradle mounted on said pedestal so as to be rotatable with respect to the pedestal about a horizontal axis;

(d) common means for rotating said cradle with respect to said pedestal and for maintaining said cradle in a fixed rotated position;

(e) a carrier slidably mounted on said cradle;

(f) common means for sliding said carrier to preselected positions on said cradle and for maintaining said carrier in a preselected position;

(g) a first conduit having an entry end and being connected to a gunning nozzle at the opposite end, said first conduit being mounted on said carrier so as to be rotatable about its longitudinal axis;

(h) common means for rotating said first conduit and gunning nozzle and for maintaining said first conduit and gunning nozzle in a fixed position; and

(i) first header means sealably surrounding the entry end of said first conduit whereby said entry end is connected to a source of refractory material at all times irrespective of the gunning position to which said first conduit and gunning nozzle may have been moved.

2. An apparatus according to claim **1** wherein the nozzle is adapted to project fluent material at an angle to the axis of the conduit.

3. An apparatus according to claim **1** wherein said apparatus includes a second conduit having an entry and an opposite end connected to a water and fluent refractory mixing element for mixing water and fluent refractory material prior to ejection of the mixture from said apparatus.

4. An apparatus according to claim **3** wherein said first conduit terminates in a section disposed at right angles to its axis and said mixing element is located in said right angle section.

apparatus includes second header means sealably surrounding the entry end of said second conduit whereby said second conduit is connected to a source of water irrespective of the particular gunning position to which said gunning nozzle may have been moved, and wherein said first header means connecting said first conduit to a source of refractory material and said second header means connecting said second conduit to a source of water both permit unlimited rotation of said gunning nozzle.

References Cited

UNITED STATES PATENTS

2,176,891	10/1939	Crom	118—305 X
3,061,201	10/1962	Rienecker	239—281
3,153,510	10/1964	Brannfors et al.	239—286
3,276,695	10/1966	Giardino et al.	239—186 XR
3,351,289	11/1967	Demaison	239—187 XR

M. HENSON WOOD, JR., Primary Examiner

HOWARD NATTER, Assistant Examiner

U.S. Cl. X.R.

118—323; 239—280