Oct. 14, 1969 G. C. HOWARD 3,472,032

PRODUCTION AND STORAGE SYSTEM FOR OFFSHORE OIL WELLS

Filed Dec. 1, 1967

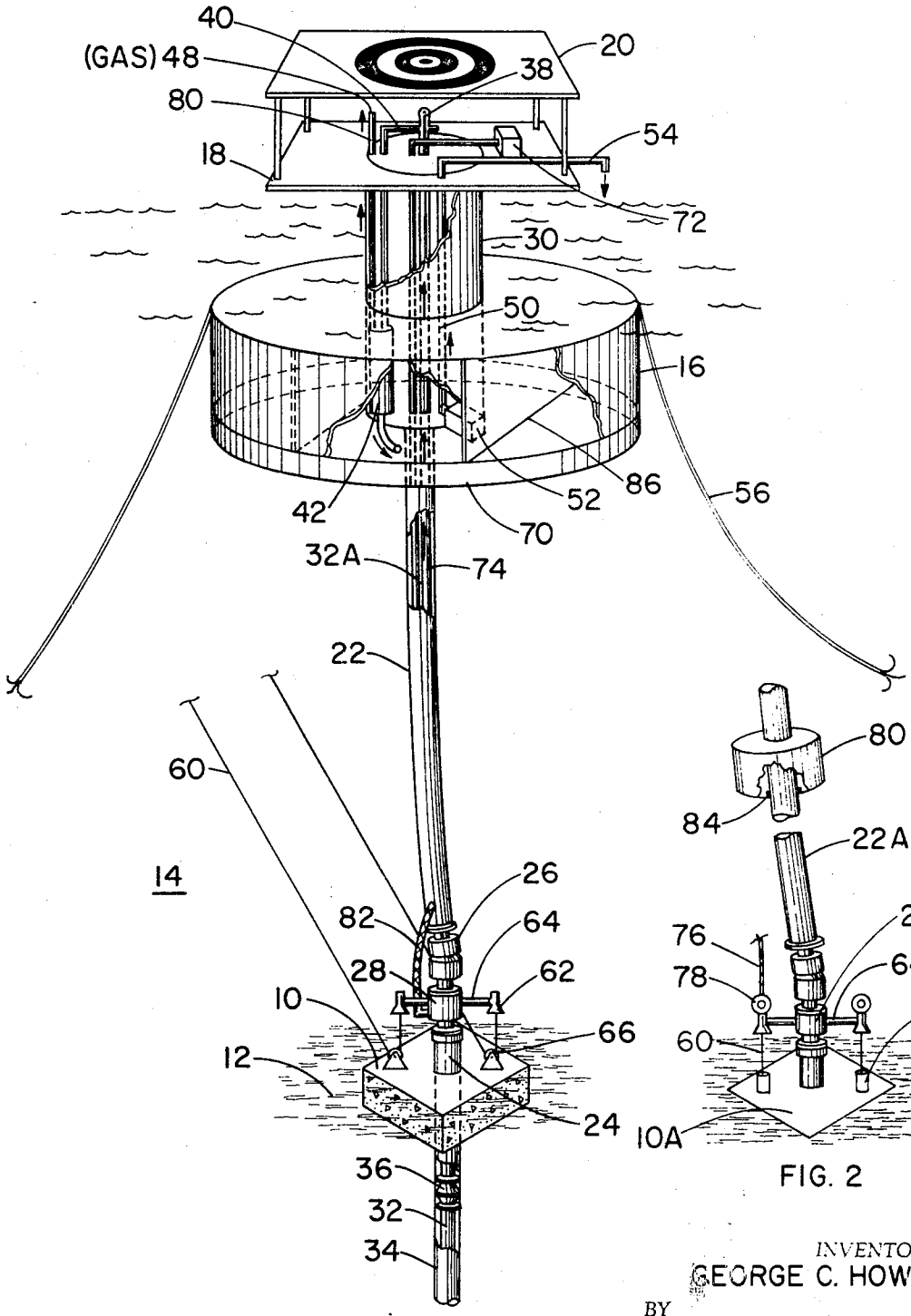

FIG. 1

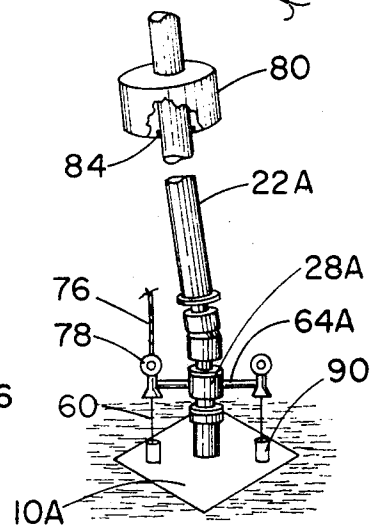

FIG. 2

INVENTOR.
GEORGE C. HOWARD

BY John D. Gassett

ATTORNEY

United States Patent Office

3,472,032

Patented Oct. 14, 1969

1

3,472,032

PRODUCTION AND STORAGE SYSTEM FOR OFFSHORE OIL WELLS

George C. Howard, Tulsa, Okla., assignor to Pan American Petroleum Corporation, Tulsa, Okla., a corporation of Delaware

Filed Dec. 1, 1967, Ser. No. 687,244
Int. Cl. E02d *21/00;* E21c *19/00;* E21b *43/01*
U.S. Cl. 61—46 13 Claims

ABSTRACT OF THE DISCLOSURE

A completion and producing system is described for a well drilled in an area covered by deep water. It includes a large buoyant storage tank positioned in the water below wave action. The tank has a slight upward buoyancy. It is held in position by a long, preferably flexible, conduit connected to the well head in the floor of the body of water. A smaller production conduit is positioned inside the large outer flexible conduit and is connected to the string of producing tubing in the well. A narrow cylindrical neck extends from a large tank to above the surface of the water where it supports a work deck and helicopter deck. A gas-oil separator and other treating equipment is carried within the large buoyant tank. Means are rovided to transport oil from the storage tank to a transport vessel.

SPECIFICATION

This invention relates to the production of petroleum from a well drilled in a marine location.

BACKGROUND

In recent years the search for oil and gas has extended into water-covered areas. At first this search was in relatively shallow water, e.g., 50 to 100 feet. In water of this depth, either an island or a platform was built over the proposed well site and the well was drilled from the island using "dry land" techniques. The islands were formed by, for example, dredging up large amounts of gravel until the islands extended above the surface of the water. Platforms were ordinarily formed by driving piling or long columns of steel into the ocean floor and attaching the deck to the ends of the piling which extend above the surface of the body of water. If a commercial well was obtained, the well head was on the platform or the top of the island similarly as on dry land wells.

More recently, the search for oil and gas has extended into deeper waters, for example, up to depths of 400–600 feet or more, and in a few instances even in excess of 1,000 feet. At these depths it is seldom feasible to build up an island or platform. Consequently, wells from this depth are drilled from large floating vessels. This drilling technique has advanced quite rapidly, and although there are still many problems associated therewith, the practice has been fairly successful. If production of oil is found in paying quantities, there must be some satisfactory way of completing the well. This area of exploitation is in its infant stage and is not nearly so well developed as that of drilling from floating vessels. It is with this completion stage that this invention is concerned.

BRIEF DESCRIPTION OF THE INVENTION

Broadly speaking, this invention concerns a completion assembly for a well drilled to the bottom of a body of water. A production tubing string in the well extends upwardly toward the surface of the body of water. A conduit means larger than the production tubing string surrounds such production tubing. The conduit means is secured to the floor of the body of water. Buoyant means are attached near the upper end of the conduit means but below the main action of waves. The buoyant means preferably includes treating means for the oil and chambers for storing the oil after treatment. A neck extends upwardly from the buoyant means to above the surface of the water. A deck is supported by such neck.

2

THE DRAWING

Various objects and a better understanding of the invention can be had from the following description taken in conjunction with the drawing in which:

FIGURE 1 is a prospective view showing the riser conduit, the production string inside, buoyant storage vessel attached to the riser conduit, a work deck supported above the water and a well base;

FIGURE 2 illustrates alternate means of forcing the riser pipe down into position.

DETAILED DESCRIPTION

In FIGURE 1 of the drawing there is illustrated a well head or anchor base **10** in the bottom **12** of the body of water **14**. Supported in body of water **14** is a buoyant storage means **16**. Above the body of water is a work deck **18** and a helicopter port deck means **20**.

I shall first consider means of positioning buoyant storage tank **16** in position. This is provided by a conduit **22** which is connected to surface casing **24**. Surface casing **24** is held in position by being cemented into the previously drilled well and attached to the well head base plate **10** in any well-known manner. Riser conduit **22** flexibly connects tank **16** to such surface conduit casing **24**. This flexibility can be built into riser **22** by making it of a flexible material such as rubber containing reinforcing steel wires therethrough to give it strength. Alternatively, riser conduit means **22** can be made of high strength steel, which is that commonly used in riser pipes in offshore drilling operations, and the lower end thereof can contain a flexible joint **26** which can conveniently be a ball joint type connector.

Conduit **22** is connected at its lower end through autoconnect **28** to surface casing **24**. The upper end of riser conduit means **22** is connected to buoyant storage means **16**. It is thus seen that storage tank means **16** is anchored to the ocean floor by the surface casing **24**. This anchorage is not rigid but rather is flexible so that riser **22** and storage means **16** can give with the effects of currents and tides. The storage tank **16** is spaced a sufficient distance below the surface of the water to minimize the effects of wave action thereon. Thus, by controlling the buoyancy of the floating tank, the strength required in riser conduit means **22** can also be minimized.

The structure above the water will next be discussed. A neck **30** extends from the center of buoyancy means **16** to well above the surface of the water, e.g., 20 to 30 feet. Neck **30** supports lower work deck **18** and the helicopter port deck **20**. Access means are provided at the upper end of neck **30** so that it can be closed for most of the time but opened when it is necessary to have access to the interior thereof. By way of example, it is anticipated that neck **30** can be in the order of 8–10 feet in diameter and riser conduit means **22** may be in the order of 2 feet.

Attention is next directed toward the oil producing tubing. A tubing string **32** is suspended in production string **34** in the well bore. A safety cutoff valve **36** is provided in tubing **32** below the ocean floor to shut in the well in event the upper production string is broken. Tubing **32** is connected to tubing extension **32A** which extends upwardly in the inside of riser means **22**. Tubing extension **32A** extends on upwardly through neck **30** to above port deck **20** and it is provided with a well head assembly such as indicated by valve means **38**. The outlet of valve **38** is connected to a down pipe **40** which goes down to a treating means such as a gas-oil separator **42** located

in buoyant storage means **16**. The outlet of gas-oil separator **42** is into one of the storage compartments of buoyancy means **16**. Buoyancy mean **16** has a plurality of vertical baffle plates **86** which may or may not be provided with openings so that oil may freely flow one compartment to the other. It may be desirable to have a compartmental tank to minimize oil loss in event of damage. The gas from the separator **42** goes through overflow pipe **48** where it can be flared or otherwise disposed of according to existing regulations.

Means for transferring oil from the storage tank will now be discussed. This includes a discharge pipe **50** which extends from the interior storage compartments of buoyancy means **16** up through the supporting neck **30** and deck **18**. A pump **52** can conveniently be provided in the lower end of discharge pipe **50**. An outlet **54** is provided on the outer end of discharge conduit **50** so that a suitable hose can be connected thereto so that a ship can be loaded.

If desired, anchor lines **56** can be provided from the buoyancy means **16** to anchors in the ocean floor (at a spot not shown). These anchor lines **56** are in reality restraining lines instead of anchor lines and will ordinarily be slack as illustrated in the drawing.

Attention will now be directed toward means of placing the buoyancy tank **16** and associated riser pipe **22**, neck **30** and work deck **18** in the position shown in the drawing. Conveniently, this can be accomplished by making up buoyancy means **16**, riser pipe means **22**, neck **30**, decks **18** and **20** and auto-connect **28** fabricated similarly as shown. These could be floated to location in a horizontal position. When over location, winch lines **60** are connected at **62** to guide arms **64**. Winch lines **60** extend from the guide arms **64** on the auto-connect **28** which is connected to riser pipe **22**. Winch lines **60** extend on downwardly through pulleys **66** which are anchored to anchor block **10**. The ends of the winch lines have previously been attached to buoys so that the lines can be recovered when needed for pulling the riser down. From the pulleys **66**, the winch lines **60** go to the surface where they are connected to winch lines or a tugboat or the like (not shown). By winch lines **60**, the apparatus or completion system is moved to the position shown in the drawing and auto-connect **28** is drawn into line with its counterpart on surface casing **24**. The upper ends of winch lines **60** are disconnected from the tugboat and can be supported by buoys, not shown, in event it is necessary to use them again.

Various other ways or methods of placing the buoyancy tank **16** and associated equipment in the position shown in FIGURE 1 are possible. One alternate method is to float the apparatus including the buoyant storage means **16**, work deck **18**, helicopter deck **20** and riser assembly **22** into place above the well head or surface casing **24** in a vertical orientation. This is accomplished by emptying buoyant means **16**, and having it of sufficient buoyancy so that it floats on the surface. When the device is over surface casing **24**, buoyant means **16** is flooded. The tank is flooded and deflooded by well known means, not shown.

As the compartments of buoyant storage means **16** are flooded, the device is sinking into the water. Riser **22** and auto-connect **28** are guided into place using a sonic well head locator, for example. Lateral movement is effected by tugboat (not shown) moving the equipment to location.

Buoyant storage means **16** typically is about 15,000 bbl. capacity or 10 days' producing capacity of the well, whichever is larger. Transfer of the oil is preferably effected by pump **50** as explained above. Alternatively, it can be accomplished by allowing sea water to enter the compartments through inlets, not shown, and forcing the oil up through outlet pipe **50**. If this system is used it is preferred to provide a minimum buoyancy by use of a floatation compartment **70** on the lower side of the storage means. This compartment can be filled with styrofoam, if desired. Another way of insuring a vertical buoyancy is to maintain a cushion of inert gas in the upper portion of buoyant storage means **16**.

FIGURE 2 illustrates a modification of the system shown for moving the riser pipe down into proper engagement with the well head casing **24**. In this system a buoyant means **80** is secured by latching means **84**, shown schematically, to riser pipe **22A**. Arms **64A** from auto-connect **28A** are provided with cable winches **78**. These winches are provided power from the surface by electric cable **76**. Lines **60** from winches **78** extend downwardly to anchors **90** which are secured to anchor base **10A**. Guide lines **60** are conveniently set and attached with base plate **10A** when it is set. Thus line **60** could extend to the surface and be supported by buoys in a known manner. Then when it is desired to lower the riser pipe **22A** and associated equipment, lines **60** are connected to winches **78**. Upon actuation of winches **78**, the riser pipe assembly is pulled into proper position. Buoyant tanks **80** maintain tension on the riser pipe **22A**. The pipe is thus pulled down against this upward force of buoyant means **80**.

While the above invention has been described with a great deal of detail, it is to be understood that various modifications thereof can be made without departing from the spirit or scope of the invention.

I claim:

1. A completion assembly for a well drilled into the bottom of a body of water and having:

(a) a production string inside said well and extending upwardly toward the surface of said body of water;

(b) buoyant means including an oil storage chamber connected to said production string;

(c) riser conduit means larger than said production string and surrounding said production string, said riser conduit means being secured at one end to the floor of said body of water and at the other end to said buoyant means whereby said buoyant means exerts the only upward force on said riser conduit means, said riser conduit means including means flexibly connecting said buoyant means to the floor of said body of water.

2. An assembly as defined in claim **1** in which said riser conduit means is made of a flexible material reinforced by a stronger flexible material.

3. An assembly as defined in claim **1** in which said buoyant means is positioned a sufficient distance below the surface of the body of water so as to be essentially free of effects of wave action.

4. An assembly as defined in claim **1** including means for connecting said production string to oil transport means.

5. An assembly as defined in claim **4** in which said buoyant means contains oil treating equipment.

6. An assembly as defined in claim **1** including winch means connected to said riser conduit means, cable means on said winch means, and anchor means anchored to the ocean floor, said cable means connected to said anchor means.

7. An assembly as defined in claim **1** wherein said buoyant means includes a plurality of compartments and further including means to flood and deflood each compartment with sea water.

8. An assembly as defined in claim **3** including an extension neck of larger size than said riser conduit means extending from said buoyant means to above the surface of the body of water and a working deck supported above said surface of water by said extension neck.

9. An assembly for a well head drilled in the floor of a body of water and in which casing anchored to the floor has been set which comprises:

a riser conduit means extending from near the upper end of said casing toward surface of said body of water;

means for releasably latching the lower end of said riser

conduit means to said casing in a sealing relationship therewith;

a buoyant storage means attached to said riser conduit means at its upper end below the surface of the body of water;

a string of tubing suspended within said well;

a production conduit extending from said tubing to said buoyant storage means, said production conduit means including means for controlling from the surface the flow of fluid through such production conduit means;

discharge means for removing oil from said buoyant storage means.

10. An assembly as defined in claim **9** including a flexible joint connecting said riser conduit means to said casing anchor to the floor.

11. An assembly as defined in claim **10** including an extension neck extending from said buoyant storage means to above the surface of the water permitting ingress and egress to said buoyant storage means and including a work deck supported above the surface of the body of water by said extension neck.

12. An assembly as defined in claim **9** including pulleys anchored to the ocean floor adjacent said anchored casing;

guide arms connected to the lower end of said riser conduit means;

winch lines extending from said guide arms through said pulleys to the surface of said body of water.

13. A completion assembly for a well drilled into the bottom of a body of water and having:

(a) a production string inside said well and extending upwardly toward the surface of said body of water;

(b) buoyant means;

(c) riser conduit means larger than said production string and surrounding said production string, said riser conduit means being secured at one end to the floor of said body of water and at the other end to said buoyant means whereby said buoyant means exerts an upward force on said riser conduit means, said riser conduit means including means flexibly connecting said buoyant means to the floor of said body of water;

(d) a well head assembly attached to the upper end of said production string.

References Cited

UNITED STATES PATENTS

2,777,669	1/1957	Willis et al.	61—46.5 X
3,008,599	11/1961	Young	61—46 X
3,111,692	11/1963	Cox	61—46.5 X
3,196,958	7/1965	Travers et al.	166—.5 X
3,221,816	12/1965	Shatto et al.	166—5
3,221,817	12/1965	DeVries et al.	166—5

OTHER REFERENCES

The Oil & Gas Journal of Jan. 25, 1960, pp. 122–123.

JACOB SHAPIRO, Primary Examiner

U.S. Cl. X.R.

9—8; 166—.5; 175—7