Oct. 7, 1969 W. N. BENNETT 3,470,621

MATERIAL TREATMENT APPARATUS AND METHOD USING A HIGH FREQUENCY FIELD

Filed May 11, 1966 2 Sheets-Sheet 1

Fig. 1

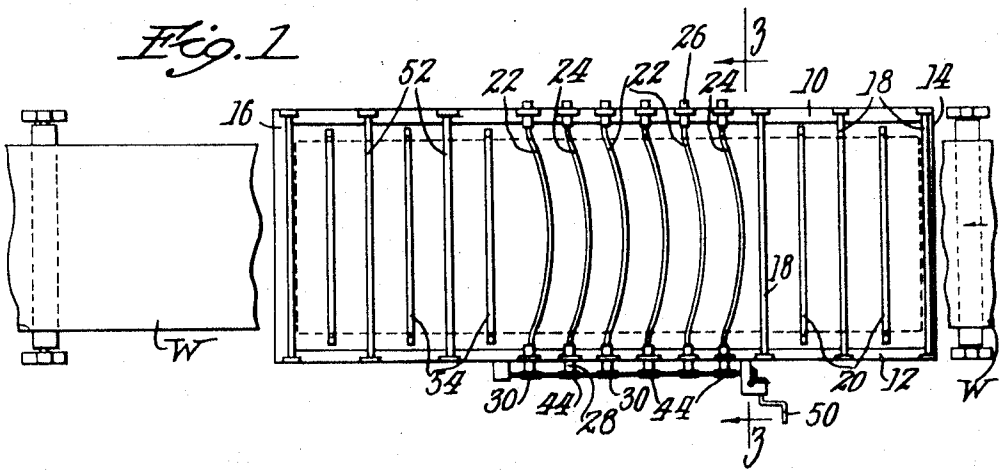

Fig. 2

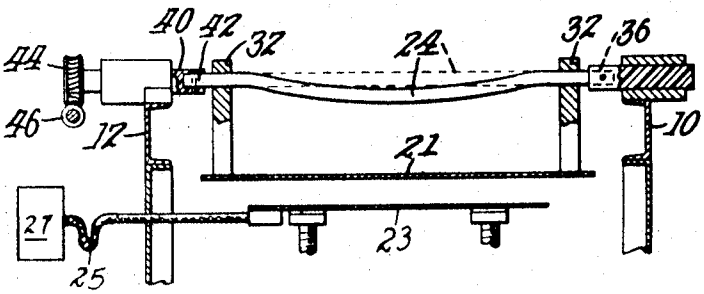

Fig. 3

Fig. 4

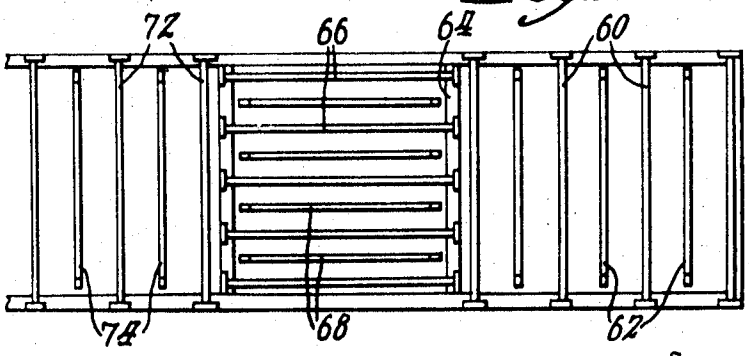

Fig. 5

Inventor
WILLIAM N. BENNETT

By Morris L. Pollack
Attorney

MATERIAL TREATMENT APPARATUS AND METHOD USING A HIGH FREQUENCY FIELD

Filed May 11, 1966 2 Sheets-Sheet 2

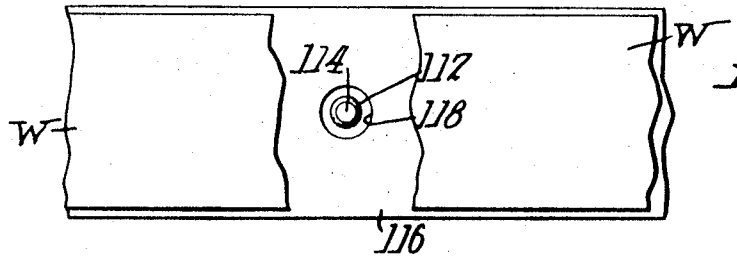

Fig. 7

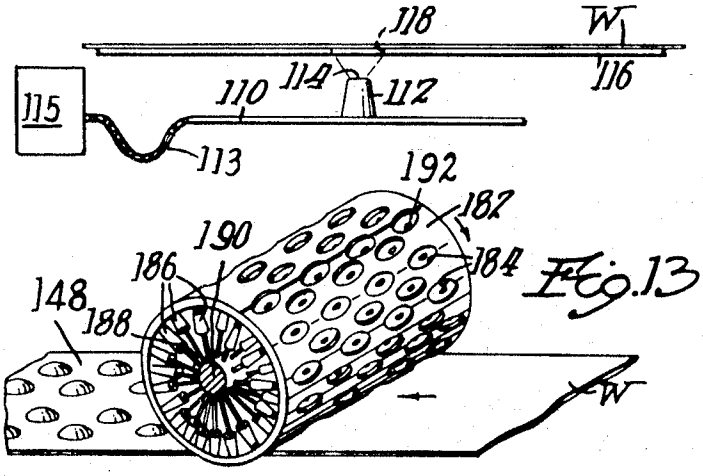

Fig. 6

Fig. 13

Fig. 9

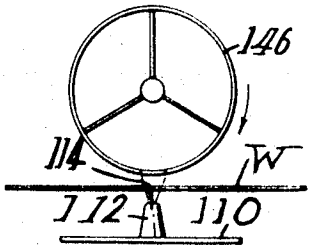

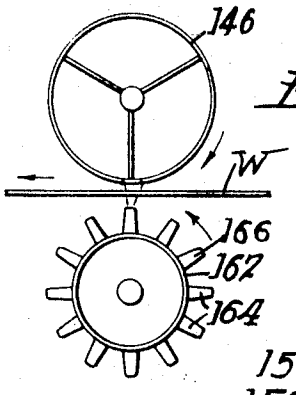

Fig. 12

Fig. 8

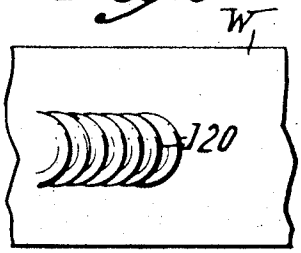

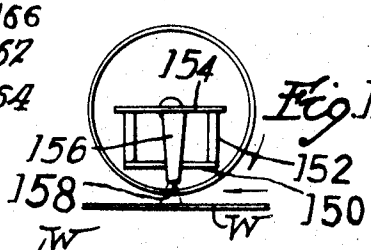

Fig. 11

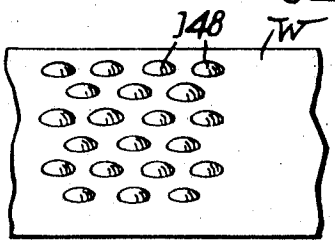

Fig. 10

Inventor
WILLIAM N. BENNETT

By Morris L. Pollack
Attorney

United States Patent Office

3,470,621

Patented Oct. 7, 1969

1

3,470,621

MATERIAL TREATMENT APPARATUS AND METHOD USING A HIGH FREQUENCY FIELD

William N. Bennett, Franconia, N.H., assignor to Fitchburg Paper Company, Fitchburg, Mass., a corporation of Delaware

Continuation-in-part of applications Ser. No. 440,209, Mar. 16, 1965, and Ser. No. 440,647, Mar. 17, 1965. This application May 11, 1966, Ser. No. 549,414

Int. Cl. F26b *3/34, 13/02;* H05b *9/00*

U.S. Cl. 34—1 25 Claims

ABSTRACT OF THE DISCLOSURE

Apparatus for subjecting material to a non-uniform high frequency field to dry or otherwise treat said material. The non-uniform field is provided by diverse electrode configurations including arcuate electrodes, curved electrodes, post-like electrodes, etc.

This application is a continuation-in-part of my applications SN 440,209 filed Mar. 16, 1965 and SN 440,647 filed Mar. 17, 1965 both of which are now abandoned.

This invention relates to the treatment of material by high frequency electric fields and more particularly to the controlled drying of materials by subjecting such materials to the effects of a high frequency electric field.

In the drying of materials by the use of dielectric drying techniques, especially materials in continuous web form or materials in the form of discrete articles each transported on a continuous web, the materials are passed either between a set of electrodes or to one side of a set of electrodes and are subjected thereby to the effects of a high frequency electric field. The air space, the web (or article), and the moisture in the web (or article) serve to complete the electric path.

In general, the dielectric drying technique results in a reduction of the moisture content of the web (or discrete articles) to a uniform level throughout. While such uniform moisture control may be advantageous and desirable in certain manufacturing processes, such as paper making or textile drying, it has been found in certain instances to result in a curling of the web of the article about its edge; as when the stock is merely coated on one side. In addition, it is sometimes desirable to provide streaks, stripes, or other designs in the material being dried and conventional dielectric drying techniques have been found unsuitable to do so.

It is therefore an object of this invention to provide an improved form of material treatment device.

Another object is to provide an improved form of dielectric material treatment device.

Another object is to provide an improved form of dielectric drying device for drying webs of material such as paper, textiles, film, etc.

A further object is to provide an improved form of dielectric drying device for subjecting material to a nonuniform high frequency electric field to provide for a nonuniform drying of the material to be treated.

A still further object is to provide an improved form of dielectric drying device for drying discrete portions of material to thereby apply a pattern thereto.

This invention involves subjecting material, in web form, or being transported by a web, to a high frequency electric field resulting from a set of electrodes formed and disposed to provide a nonuniform high-frequency electric field.

In carrying out the invention, according to preferred

2

embodiment thereof, the electrodes may either be of rectilinear configuration disposed both parallel and perpendicular to the path of travel of the web, or of curvilinear configuration and disposed for adjustable movements with respect to the path of web travel, or of post-like configuration adapted to direct the high frequency electric energy to a predetermined spot, or of any combination of the above; but in all instances so as to provide for a nonuniform high-frequency electric field.

Features and advantages of the invention will be seen from the above, from the following descriptions of the preferred embodiment when considered in conjunction with the drawing, and from the claims appended hereto:

In the drawings:

FIG. 1 is a diagrammatic plan view of a drying apparatus embodying the present invention;

FIG. 2 is a view in side elevation in diagrammatic form illustrating the adjustment action of some of the electrodes of the apparatus of FIG. 1;

FIG. 3 is an enlarged view in partial section taken on line 3—3 of FIG. 1;

FIG. 4 is a diagrammatic plan view of a modified form of drying apparatus;

FIG. 5 shows still another diagrammatic plan view of a portion of an apparatus utilizing electrodes of yet another configuration;

FIG. 6 is a fragmentary side elevation showing electrodes in the form of a hollow post and an apertured plate.

FIG. 7 is a fragmentary plan view in partial section of the apparatus of FIG. 6;

FIG. 8 is a fragmentary plan view showing the effect on a web of the drying apparatus of FIGS. 6 and 7;

FIG. 9 is a fragmentary side elevation showing the electrodes in the form of hollow posts as in FIGS. 6 and 7 but with the apertured plate in the form of a cylinder adapted to be rotated;

FIG. 10 is a fragmentary plan view showing the effect on a web of the drying action of the apparatus of FIG. 9.

FIG. 11 is a fragmentary side elevational view showing an electrode in the form of a hollow post fixedly disposed in a cylindrical apertured plate which is adapted to be rotated thereabout;

FIG. 12 is a fragmentary side elevational view showing electrodes in the form of hollow posts disposed on a rotatable body to one side of a web path and an apertured plate in the form of a hollow cylinder disposed to the other side of the web path, both the electrodes and the plate adapted to be rotated; and

FIG. 13 is a perspective view showing electrodes in the form of hollow posts disposed within a cylindrical apertured plate, both adapted to be rotated on an axis passing through the cylinder.

For convenience, the invention will be described in conjunction with an apparatus for drying a web of material, such as paper, textiles, film, or the like which is moving through a phase in its manufacturing process wherein it is being dried. It being understood, nevertheless, that without departing from the scope of the invention that subject apparatus could just as easily be utilized in a manufacturing process wherein discrete articles are to be dried.

With reference to FIGS. 1 and 2, the numbers **10** and **12** respectively generally designate right and left hand supports of a drying apparatus having a front wall **14** (FIG. 1) and an end wall **16**. A series of spaced grounded electrodes **18** span right-hand support **10** and left-hand support **12** in proximity to forward wall **14** (FIG. 1). A plurality of hot or energizable electrodes **20** (FIG. 1). alternately disposed with respect to grounded electrodes **18**, are supported therebetween on an RF plate **21** (FIG. 3) disposed in spaced relationship with a coupling plate

23, A cable 25 interconnects plate 23 to a suitable source of high frequency electric energy 27.

When electrodes 20 are energized and a wet web W is moved in close proximity thereto (such as in the direction of the arrow of FIGS. 1 and 2) a high-frequency electric field will be created between web W and electrodes 18 and 20 and a current will flow therebetween since it is well known that liquids and materials containing liquids will conduct current. Due to the flow of these currents through the wet areas of the web, and also due to the excitation of the molecules of the web by the field, a heating or drying operation will be produced to drive moisture from web W into the surrounding atmosphere. In addition, some skin effect heating will also take place. The more saturated with liquid the material is the lower its resistivity and the better its ability as a conductor. As the material becomes dryer the resistivity goes up thus impeding the flow of current. As the web becomes drier the demand for power becomes less requiring less output from the high-frequency electric energy source. Therefore only the power needed to supply the permitted currents is made available.

The grounded electrodes 18 and energizable electrodes 20 are disposed so as to produce a substantially uniform high-frequency electric field when energizable electrodes 20 are energized. In addition the number of electrodes have been chosen so that the effect thereof upon web W, as it passes in proximity thereto, is not sufficient to remove all of the moisture from web W.

As web W continues its movement, in direction of the arrow of FIGS. 1 and 2, additional moisture therein will be driven off by the coaction between web W and a set of alternately disposed grounded electrodes 22 and energized electrodes 24 positioned in the next section of the apparatus. Electrodes 22 and 24 are curvilinear in configuration; the degree of curvature depending upon the class of work which is to be processed.

Ends 26 (FIG. 1) of grounded electrodes 22 are rotatably journalled in bearings 38 (FIG. 3), of Teflon or the like, which are suitably carried by right-hand support 10; while ends 28 (FIG. 1) of grounded electrodes 22 are journalled in similar type bearings 40 (FIG. 3) suitably carried by left-hand support 12. Ends 28 of grounded electrodes 22 are in addition extended beyond journals 40 so that each may have secured thereto a worm gear 30.

Energizable electrodes 24 are each electrically coupled by posts 32 to RF plate 21. Ends 36 (FIG. 3) of energizable electrodes 24 are rotatably journalled in bearing 38 carried by right-hand support 10 while ends 42 of energizable electrodes 24 are rotatably journalled in bearings 40 carried by left-hand support 12. Each end 42 of energizable electrodes 24 is extended beyond its bearing 40 and has a worm gear 44 disposed thereon.

An elongated worm gear 46 (FIG. 3) is suitably disposed for meshing engagement with worm gears 30 and 44 and is interconnected at one of its ends to a crank 50 to facilitate selective rotation thereof and thereby of gears 30 and 44 and of electrodes 22 and 24 to move same between the full line positions of FIG. 2 and the dotted line positions of FIG. 2.

The path of current flow between energizable electrodes 24 and grounded electrodes 22 for any rotative position thereof is a constant and therefore, when energizable electrodes 24 are energized from high-frequency electric source 27, the field produced will be substantially uniform. However, the field established between the rightmost electrode 24 and the leftmost electode 18 when there is no web W in the field will vary from the central portions thereof out and depending upon the relative position of electrode 24. When web W is moving through the field established the current path will of course extend through web W as long as the resistivity therethrough is less than through the air between adjacent electrodes.

As electrodes 22 and 24 approach a position with the central portions thereof as close as possible to web W the intensity of the high-frequency electric field increases along the center of the web, diminishing as it approaches the ends to a magnitude substantially equal to the intensity of the field produced by electrodes 18 and 20. As electrodes 22 and 24 approach a position with the central portions thereof as far removed from web W as possible the intensity of the high-frequency electric field will diminish along the center of the web, increasing as it approaches the ends to a magnitude substantially equal to the intensity of the field produced by electrodes 18 and 20.

In this manner the center portion of web W may be dried at a rate which is different from the rate at which the ends are drying and a tendency of web W to curl at the edge (as is common for instance in a web coated on one side) can be counteracted. It is of course possible to curl the edges of web W through suitable positioning of electrodes 22 and 24 is so desired.

It should of course be obvious the separate RF plates coupling means, and sources of high frequency electric energy may be provided for electrodes 18 and 20 and for electrodes 22 and 24 and that by so doing additional selections of field intensities are possible.

An additional set of alternately disposed spaced grounded electrodes 52 span right-hand support 10 and left-hand support 12 in the section of the apparatus to the left of the section where electrodes 22 and 24 are disposed. In addition a set of alternately disposed energizable electrodes 54, carried either by RF plate 21 or another FR plate, are disposed in spaced relationship with grounded electrodes 52. Electrodes 52 and 54 will serve to remove any additional moisture contained in web W following the exposure thereof to electrodes 22 and 24.

A modification of the apparatus shown in FIGS. 1, 2, and 3 is shown in FIG. 4; wherein a plurality of spaced grounded electrodes 60 are disposed in the manner similar to that of grounded electrodes 18 of FIG. 1 and have alternately disposed therebetween energizable electrodes 62 carried by an RF plate (not shown) such as RF plate 21 (FIG. 3) upon which energized electrodes 20 of FIG. 1 are disposed.

The next section of the apparatus of FIG. 4 includes a group 64 of spaced grounded electrodes 66 and energizable electrodes 68, extending in a direction at right angles to that of electrodes 60 and 62. Energizable electrodes 68 are of course disposed on a suitable RF plate (not shown) which may be the same as the RF plate for electrodes 60 and 62 or which may be separate therefrom. Electrodes 66 and 68 may be of curvilinear configuration similar, to that of electrodes 22 and 24, and may be rotatably mounted as are electrodes 22 and 24, or electrodes 66 and 68 may merely be of rectilinear configuration similar to that of electrodes 60 and 62.

The next section of the apparatus of FIG. 4 includes a set of spaced grounded electrodes 72 alternated with a set of energized electrodes 74 suitably disposed on an RF plate.

It will thus be seen that the apparatus of FIG. 4 may be used for controlling the drying of a web in a manner similar to that for the apparatus of FIG. 1 to thus apply a configuration to a web or to cause or counteract unwanted distortions therein. Each group of electrodes may be separately energized and controlled as for the apparatus of FIG. 1.

Different effects may be obtained by providing electrodes of varying configuration such as that shown in FIG. 5 wherein electrodes 76 are provided with a plurality of rises 78 alternately disposed with respect to points 80 and 82 thereof.

The energized electrodes may also take the form of hollow posts 112 (FIGS. 6 and 7) having free ends 114 and disposed on an RF plate 110 connected by a cable 113 to a source of high-frequency electric energy 115. A ground plate generally indicated at 116 has formed therein on aperture 118 disposed in spaced relationship with respect to free end 114 of post 112. Apertures 118 have been

shown (FIG. 7) with a circular configuration but it should be obvious that aperture **118** may be formed in any configuration depending upon the effect which is desired to have produced. In addition, it should be obvious that a plurality of posts **112** and coacting apertures **118** may be disposed in appropriate positions across and lengthwise of the apparatus.

As a wet web W passes above ground plate **116** in close proximity thereto but preferably not touching same, a drying action occurs. A field is developed between the free end **114** of post **112**, once energized, and the edges of aperture **118** so as to include wet web W as it passes thereover. However, since only a portion of web W is exposed to aperture **118** and the high-frequency electric field thereabout only a portion of web W is dried and that portion is dried in a pattern that produces a stripe. This pattern is in a sort of wrinkled form as shown in FIG. 8, the wrinkles being semicircles. If aperture **118** were of diamond-shaped configuration a chevron or herringbone pattern would result while if aperture **118** were ovular-shaped a semiovular pattern would result. The effect on web W can be varied by the speed of the web, the kind of coating, the amount of moisture, and the intensity of the field, as well as the distance between free end **114** and post **112** and aperture **118** in plate **116** and the size and shape of aperture **118**.

In FIG. 9 post-like electrode **112** is carried by an RF plate **110** with its free end **114** disposed for coaction with a grounded plate **146** in the form of a cylinder suitable disposed for rotation and rotated by suitable means (not shown). Grounded plate **146** may be provided with either one or more apertures of either circular or other configuration as hereinbefore described; it being understood that a plurality of post-like electrodes **112** having free ends **114** may also be suitably disposed on RF plate **110**.

As the wet web W passes in either direction between grounded plate **146** and electrode **112**, once energized, the drying action takes place between free end **114** of electrode **112** and the edges of the aperture (not shown) formed in grounded plate **146** as hereinbefore described for the embodiments of FIGS. 6 and 7. However, as grounded cylinder **146** is rotated different effects can be produced on web W. If the surface speed of grounded cylinder **146** and web W are substantially identical a plurality of substantially circular configurations such as those shown at **148** on web W in FIG. 10, are formed on web W since the apertures formed in grounded cylinder **146** in effect travel at the same speed as web W and therefore move with it. On the other hand, if grounded cylinder **146** is held stationary then the effect on web W is to form semicircular stripes as shown at **120** in FIG. 8. While if grounded plate cylinder **146** is rotated at a speed resulting in a surface speed greater or less than the surface speed of web W the effect on web W will be other than that shown in FIGS. 8 and 10.

A grounded cylinder **146'** (FIG. 11) similar in construction to grounded cylinder **146** of FIG. 9, and having formed therein one or more apertures similar to those provided in grounded cylinder **146** has disposed therewithin a stationary support plate **150** formed with electrically nonconductive properties. A plurality of standoffs **152** extend from support plate **150** to support thereon on RF plate **154** similar to RF plate **110** of FIG. 9 and upon which are carried one or more post-like electrodes **156** with free ends **158** disposed for coaction with the apertures (not shown) formed in grounded cylinder **146'** to provide a drying effect upon web W in the manner hereinbefore described.

Grounded cylinder **146** of FIG. 9 may also be disposed for coaction, as shown in FIG. 12, with a cylindrical RF plate **160** upon which are disposed a plurality of electrodes **164** each having a free end **166**. Grounded cylinder **146** is of course provided with one or more apertures of either circular or other configurations as hereinbefore described. In this embodiment both grounded cylinder **146** and RF plate **162** are disposed for rotation by suitable means (not shown), and depending upon the speed of rotation thereof with respect to each other, and with respect to moving web W, the drying effect between same and web W (produced as hereinbefore described) may result in web W having formed thereon circles (such as those shown at **148** in FIG. 10) semicircles shown (such as those shown at **120** in FIG. 8) or any other desirable configuration.

The grounded cylinder and energizable electrodes may be further combined, as shown in FIG. 13, wherein grounded cylinder **182** if formed with a plurality of apertures **184** and is mounted for rotation upon suitable support means and by suitable driving means (not shown). An electrode **186** is provided for each aperture **184**, with each electrode carried by a spoke **188** which is mechanically and electrically coupled to an RF shaft **190**, such that free ends **192** of electrodes **186** are fixedly disposed with respect to apertures **184** and for rotation with grounded cylinder **182**. Here again, if grounded cylinder **182** is rotated so that the surface speed thereof is substantially equivalent to the surface speed of web W, circular configurations **148** will be formed in web W while if grounded plate **182** remains stationary stripes or chevrons such as shown at **120** in FIG. 8 will be formed in web W. It is of course obvious that if there is a difference in surface speeds between grounded cylinder **182** and web W other configurations may be formed in web W.

From the above description it will thus be seen that a novel and improved dielectric drying apparatus has been provided which, depending upon the configuration of the electrodes, can be utilized to remove distortions, which would otherwise be formed in an article or web or in the alternative to provide distortions, or a pattern, as desired, in such article or web.

The embodiments of the invention in which an exclusive property or privilege is claimed, are defined as follows:

1. The method of forming deformations in an article: comprising

(a) providing an unevenly distributed high frequency electric field from a set of alternately disposed grounded and energized electrodes at least some of which are rectilinear and some of which curvilineal and wherein said field is operative within a predetermined area so that in at least one portion of said predetermined area the intensity of the field is different than the intensity of the field for the remaining portion of said predetermined area; and

(b) moving an article along a predetermined path adjacent said field so as to expose only a portion of said article to said portion of said field.

2. The method of claim **1**: including selectively varying the field so that the intensity thereof in said one portion either exceeds or is less than the intensity of the field for said remaining portion.

3. The method of claim **1**: wherein

(a) said portion of said predetermined area in which the intensity of the field is different is provided by said electrodes of curvilinear configuration; and

(b) selectively varying the intensity of said field of said predetermined area by rotating the curvilinear electrodes about a predetermined axis of rotation.

4. The method of claim **1** wherein the article is in web form.

5. The method of claim **4** wherein the article is paper.

6. The method of forming deformations in an article or for preventing the formation of deformations in an article: comprising

(a) providing an unevenly distributed high frequency electric field by the coaction of at least one post like energized electrode and at least one aperture formed in a grounded plate disposed in proximity to said post like electrode and wherein said field is operative within a predetermined area so that in at least one portion of said predetermined area the in-

tensity of the field is different than the intensity of the field for the remaining portion of said predetermined area; and

(b) moving an article along a predetermined path adjacent said field so as to expose only a portion of said article to said portion of said field.

7. The method of claim **6**: wherein said grounded plate is disposed for movement with respect to said post like electrode.

8. The method of claim **6**: wherein said grounded plate and said post like electrode are both disposed for rotation with respect to each other.

9. Material treating apparatus: comprising

(a) high frequency electric energy means;

(b) grounded electrode means;

(c) energizable electrode means disposed for coaction with said grounded electrode means and coupled to said high frequency energy means to be energized thereby and when so energized coacting with said grounded electrode means to produce an unevenly distributed high frequency electric field;

(d) said grounded electrode means and said energizable electrode means including a plurality of alternately disposed members arranged in at least a first group and a second group;

(e) said first group including at least one grounded electrode and one energizable electrode of rectilinear configuration; and

(f) said second group including at least one grounded electrode and one energizable electrode of curvilinear configuration.

10. The apparatus of claim **9** wherein said electrodes of said second group are disposed for selective adjustment with respect to the electrodes of said first group.

11. The apparatus of claim **10** wherein said electrodes of said second group are arcuate in configuration.

12. The apparatus of claim **9**: including means mounting said energizable electrode means and said grounded electrode means adjacent the path of movement of material so that upon energization of said energizable electrode means by said high frequency electric energy means said energizable electrode means, said grounded electrode means and said material coact produce an unevenly distributed high frequency field to drive moisture from said material.

13. The apparatus of claim **12**: wherein the effect of the unevenly distributed high frequency electric field upon the material will either cause the formation of deformations therein or prevent the formations of deformations which might otherwise occur.

14. The apparatus of claim **13** wherein the material is in web form.

15. The apparatus of claim **14** wherein the material is paper.

16. Material treating apparatus: comprising

(a) high frequency electric energy means;

(b) grounded electrode means;

(c) energizable electrode means disposed for coaction with said grounded electrode means and coupled to said high frequency energy means to be energized thereby and when so energized coacting with said grounded electrode means to produce an unevenly distributed high frequency electric field;

(d) said energizable electrode means including at least one post like element having a free end; and

(e) said grounded electrode means including at least one plate like element formed with an aperture of

predetermined configuration and disposed in proximity to said free end of said post like element.

17. The apparatus of claim **16**: wherein said plate like element is of cylindrical configuration and disposed for rotation about a predetermined axis.

18. The apparatus of claim **17**: wherein said post like element is fixedly disposed within said cylindrical plate like member and said plate like member rotates with respect thereto.

19. The apparatus of claim **17** wherein said post like member isfi xedly disposed within said cylindrical plate like member for rotation therewith.

20. The apparatus of claim **17** wherein there are a plurality of post like members disposed for rotation about an axis to bring successive ones of said post like members into position for coaction with said plate like member.

21. The apparatus of claim **20**: wherein said cylindrical plate like member includes a plurality of apertures disposed for selective movement, upon rotation of said plate like member, into positions of coaction with successive ones of said post like members upon concurrent rotation thereof.

22. Apparatus of the class described: comprising

(a) a support;

(b) a series of electrodes mounted on said support and extending across same to define a web path through which a web moves when traveling past said electrodes; and

(c) means applying a high frequency current to said electrodes to produce a high frequency electric field which has a drying tendency on a web when disposed in said web path;

(d) said electrodes being curved generally in the central area thereof between their ends;

(e) said ends of said electrodes being journalled in said support;

(f) said electrodes being adjustable about an axis extending through the ends thereof to vary the distance of certain portions of said electrodes from said web path to thus vary the intensity of the field according to the distance of said certain portions of said electrodes from a web when disposed in said web path.

23. The apparatus of claim **22** wherein said electrodes are parallel and curved in the same direction.

24. The apparatus of claim **23** wherein the curve of said electrodes increases generally from the ends thereof which are journalled in the said support to the center of said electrodes.

25. The apparatus of claim **23** wherein said electrodes are shaped on the curvature of arcs.

References Cited

UNITED STATES PATENTS

2,469,640	5/1949	Gillespie	34—1 X
2,476,283	7/1949	Castellan	219—10.81 X
2,525,356	10/1950	Hoyler	219—10.81
2,642,000	6/1953	Wieking	34—1 X
3,031,555	4/1962	Ross et al.	219—10.61 X
3,267,584	8/1966	Southwell	34—1

JOHN J. CAMBY, Primary Examiner

U.S. Cl. X.R.

219—10.61, 10.81