PRESSURE-SENSITIVE ELECTRICAL CONTROL DEVICE

Filed Nov. 28, 1966

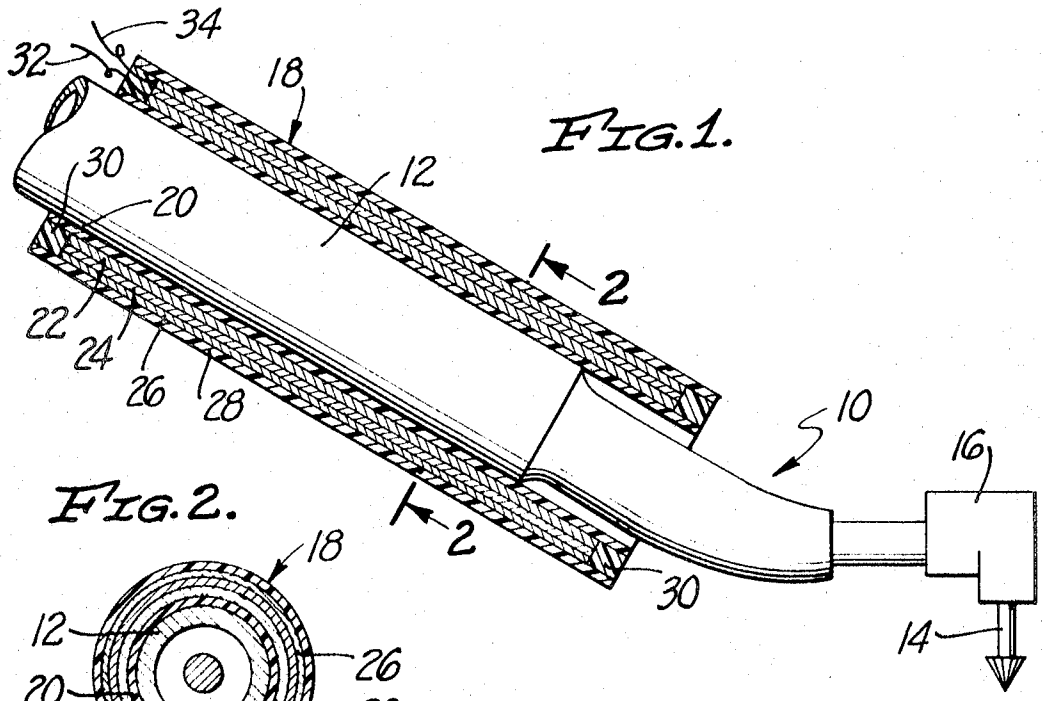

FIG. 1.

FIG. 2.

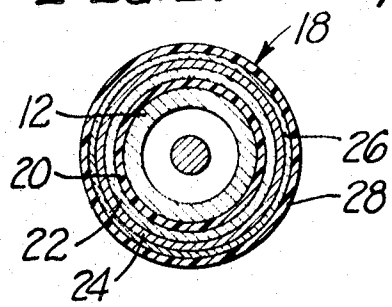

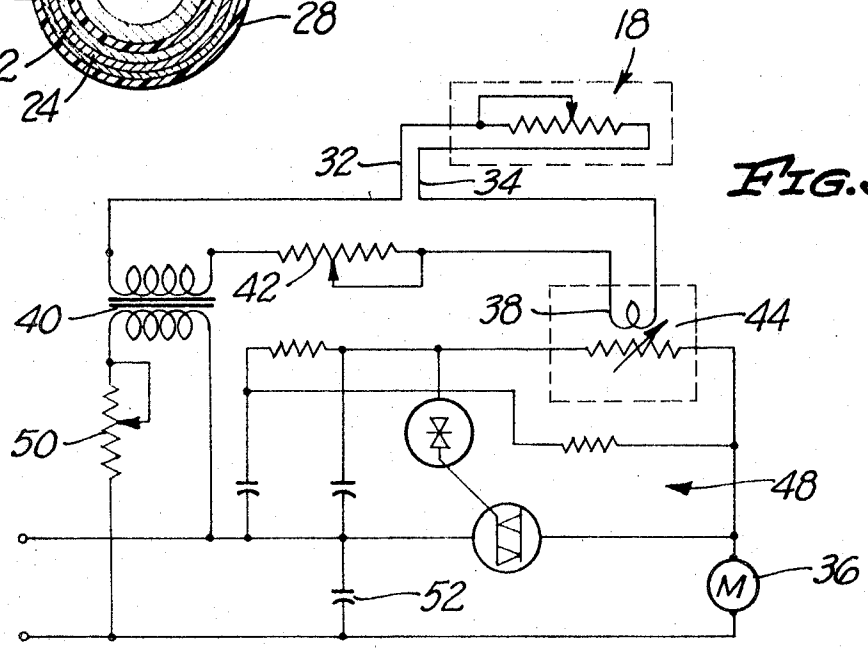

FIG. 3.

INVENTOR
BERNARD A. ROSS
BY
MAHONEY & HORNBAKER
ATTORNEYS

United States Patent Office

3,463,990

Patented Aug. 26, 1969

1

3,463,990
PRESSURE-SENSITIVE ELECTRICAL CONTROL DEVICE

Bernard A. Ross, Sherman Oaks, Calif. (12320 Burbank Blvd., Room 306, North Hollywood, Calif. 91607)

Filed Nov. 28, 1966, Ser. No. 597,413
Int. Cl. H02p *7/00;* H02k *27/20*
U.S. Cl. 318—335 1 Claim

ABSTRACT OF THE DISCLOSURE

The device is preferably formed as a sleeve telescoped over the housing of a hand-held tool and includes a pressure-sensitive, sleeve-like member which automatically varies the amount of transmission of electrical power therethrough proportional to pressure applied thereto by a person's hand holding the tool. An electrical circuit electrically connects the pressure-sensitive member with the actuating means for the tool so that the actuating means receives proportionate amounts of electrical power upon electrical power being transmitted through said pressure-sensitive member. Thus, with the tool actuating means including a variable speed, electrical drive motor, variations in hand pressure against the pressure-sensitive member will vary the electrical power to the drive motor and thereby, the speed of the motor. The pressure-sensitive member is preferably mounted on the tool housing by an inner insulating sleeve telescoped by an electrical conducting sleeve, in turn, telescoped by the pressure-sensitive member in the form of a sleeve, the latter being sensitive to varying electrical transmissions by pressure at any point thereon. The pressure-sensitive sleeve is, in turn, telescoped by an outer electrical conducting sleeve which is covered by an outer insulating sleeve.

This invention relates to a pressure-sensitive electrical control device which is particularly adaptable for use in the electrical control of hand-held tools, although certain of the principles of the present invention may be likewise advantageously applied to the control of electrical devices of various types. More particularly, this invention relates to a pressure-sensitive electrical control device which may be mounted as a sleeve on or formed integral with a hand-held tool and may be arranged for varying the electrical power to a tool-driving motor merely by an increase or decrease in hand pressure to said control device and preferably at any point along said control device sleeve.

One particularly advantageous application of the principles of the present invention lies in the field of hand-held, electrically driven dental tools for instance, dental handpieces of the type rotated by variable speed electric motors. Presently, the control of such dental handpieces is accomplished through foot rheostats positioned on the floor adjacent the field of operation. To operate the same, it is necessary for the dentist using the handpiece to stand primarily on one foot and operate the foot rheostat with the other foot.

Obviously, the majority of the dentist's work must be accomplished from a standing position so that the dentist's weight must be supported on the dentist's legs and feet for long periods of time. As a result, many dentists develop relatively severe leg and foot problems. Such problems are even more greatly magnified by the foregoing required positioning during the use of foot rheostat controlled dental handpieces in view of the fact that nearly the entire dentist's weight must be supported on one leg and one foot, while the other foot is used for controlling the foot rheostat.

2

It is, therefore, an object of my invention to provide a pressure-sensitive electrical control device particularly adaptable for controlling handheld tools, such as dental handpieces, wherein the entire electrical control for the dental handpiece may be accomplished by the dentist's hand and it is unnecessary for the dentist to manipulate a foot rheostat for the control of said dental handpiece. The dentist, with the use of the pressure-sensitive electrical control device of the present invention, may stand with his weight supported fully and equally on both legs and feet. Thus, dentists' common foot and leg problems will be greatly minimized.

It is another object of my invention to provide a pressure-sensitive electrical control device which may be incorporated as a pressure-sensitive control sleeve for a dental handpiece to provide the sole and a positive electrical control for said dental handpiece. The control may be formed integral with the handpiece, or as a sleeve which merely telescopes over and grips the normal cylindrical housing of the dental handpiece, preferably extending about one inch, or any other desirable length, and being pressure-sensitive throughout said length. The handpiece may, therefore, be gripped in the usual manner convenient for the dentist in carrying out the proper functioning of said handpiece and the control device sleeve will control the speed of the handpiece from hand pressure applied thereto.

It is still another object of my invention to provide a pressure-sensitive electrical control device wherein the greater the pressure applied to said control device, the greater the change in electrical power transmitted therethrough. In other words, the electrical control device may be adapted so that with freedom from pressure thereon, the electrical power transmitted therethrough is of a sufficiently minor magnitude so that the particular electrical device being controlled thereby will remain inoperable or at a low speed. Upon the pressure against the electrical control device being increased, however, the electrical power to the electrical device will be proportionally increased so that with, for instance, a variable speed, electrically driven motor, increased pressure will result in increased motor speed.

It is also an object of my invention to provide a pressure-sensitive electrical control device which may be incorporated with a particular form of electrical circuit wherein low voltage electrical power may be used with the electrical control device and changes by said electrical control device in said low voltage power will be automatically translated into changes in high voltage electrical power connected to and driving or controlling an electrical device. Again, considering the instance of electrically driven dental handpiece and the pressure-sensitive electrical control device of the present invention as a sleeve directly on the handpiece housing, the electrical power transmitted through and controlled by said pressure-sensitive sleeve may be of low voltage, eliminating any possible danger to either the dentist using said handpiece or the patient upon which dental work is being performed. At the same time, the electric motor driving said dental handpiece may be and is necessarily of much higher voltage, but said higher voltage is remote from the dentist's hand or the patient's mouth.

Other objects and advantages of the invention will be apparent from the following specification and the accompanying drawing which is for the purpose of illustration only, and in which:

FIG. 1 is a fragmentary, vertical, sectional view showing an embodiment of the pressure-sensitive electrical control device of the present invention as a control sleeve over a dental handpiece housing for adapting said handpiece as a pressure-sensitive hand controlled unit;

FIG. 2 is a vertical, sectional view taken along the broken lines 2—2 in FIG. 1; and

FIG. 3 is an embodiment of an electrical circuit controlled by the electrical control device of FIGS. 1 and 2 and controlling the operation of said dental handpiece thereof.

Referring to FIGS. 1 and 2 of the drawing, a typical electrically driven dental handpiece is generally indicated at **10** and is hand-held by a dentist by gripping along a cylindrical housing **12**. The dental handpiece **10** is adapted for the mounting and rotation of typical burr **14** received in a head **16**. Furthermore, the rotation of the burr **14** is accomplished through usual electrically controlled driving means of a form to be hereinafter discussed more in detail.

A pressure-sensitive electrical control member, incorporating the principles of the present invention, is generally indicated at **18** and includes an inner insulating sleeve **20** telescoped by an inner conducting sleeve **22** which is, in turn, telescoped by a pressure-sensitive, resistance sleeve **24**. An outer conducting sleeve **26** is telescoped over the pressure-sensitive resistance sleeve **24** and an outer insulating sleeve **28** is telescoped over the outer conducting sleeve, said inner and outer insulating sleeves being end connected by the insulating rings **30** so as to electrically seal the conducting sleeves **22** and **26** and the pressure-sensitive resistance sleeve **24** within the control member **18**, as shown. An electrical conductor **32** is electrically connected to the inner conducting sleeve **22** and an electrical conductor **34** is electrically connected to the outer conducting sleeve **26**.

The inner and outer insulating sleeves **20** and **28** may be formed of usual resilient, electrically insulating plastic materials and the inner conducting sleeve **22** may be formed of any usual thin, electrically conducting metal, such as brass, steel or aluminum. The outer conducting sleeve **26** must be relatively flexible in order to transmit pressure from the outer insulating sleeve **28** inwardly to the pressure-sensitive resistance sleeve **24** while still conducting electricity from the electrical conductor **34** along said sleeve. For this purpose, the outer conducting sleeve **26** may be formed of aluminum foil or other similar materials, such as a flexible layer of electrically conducting paint applied to one or the other of the pressure-sensitive resistance sleeve **24** or the outer conducting sleeve **26**.

The inner insulating sleeve **20** is preferably formed of an insulating plastic which will grip the dental handpiece housing **12** in order to retain the entire control member **18** in place, but other fastening means may be used between the control member and the housing, all well known to those skilled in the art. The insulating rings **30** may also be formed of a usual insulating plastic and sealed in place between the ends of the inner and outer insulating sleeves **20** and **28** by adhesives and the like. The electrical conductors **32** and **34** may extend outwardly from the inner and outer conducting sleeves **22** and **26** along the inner surfaces of the inner and outer insulating sleeves between said sleeves and the insulating rings.

The pressure-sensitive resistance sleeve **24** may be formed of any one of a group of materials having the characteristics of normally resisting the passage of all but small magnitudes of electrical power therethrough in the free state, that is, when no pressure is applied thereto, and conducting increasing magnitudes of electrical power therethrough proportionate to the amount of pressure applied thereon so that as the pressure increases, the electrical power transmission increases. Such materials are known as pressure-sensitive resistance materials. An example of a pressure-sensitive resistance material that may be used is one called "Micro-ducer Pressure Sensitive Paint Type 9–A" manufactured by Clark Electronic Laboratories, Palm Springs, Calif., which paint may be applied as a sleeve-like coating on the inner conducting sleeve **22**.

Thus, with the particular embodiment of the control member **18** shown and described, such control member is provided mounted on the dental handpiece housing **12** and is sensitive to hand pressure applied at any point along said control member for transmitting electrical power therethrough. In the particular instance, the control member **18** is arranged so that without any appreciable pressure, only a small amount of electrical power is transmitted therethrough, but upon increasing pressure being applied, greater and greater electrical power will be transmitted. From the broad standpoint, according to the principles of the present invention, the important feature involved is that electrical transmission through the control member **18** will vary according to pressure applied thereto, in this case, the greater the pressure, the greater the power transmission.

The control member **18** is electrically connected to an electrical circuit through the electrical conductors **32** and **34**, a typical example of such a circuit being illustrated in FIG. 3, and having the characteristic of translating the electrical power transmission through the control member **18** into the proportionate control of electrical power to a variable speed motor **36** for driving the dental handpiece **10**. As shown in FIG. 3, the control member **18** is connected through the conductors **32** and **34** into the electrical circuit through a usual transformer **40** wherein the main power source for the electrical circuit may be the usual domestic 115 volt alternating current regulated to the transformer by a variable resistor **50**, but the voltage through the control member is reduced by the transformer **40** to a much lower voltage. Furthermore, the control member **18** is connected into the electrical circuit through a usual regulating variable resistor **42**, and more important, through a photo-emitter-sensor **44**, thereby completely isolating the electrical circuit through the control member **18** from the electrical circuit through the motor **36**.

The control member **18** is connected to the lamp **38** of the photo-emitter-sensor **44**, said photo-emitter-sensor having the characteristics of varying the effective voltage or average power to the motor **36** according to the current passing through the lamp **38**. Thus, the lower voltage control member **18** through the photo-emitter-sensor **44** may effectively control the speed or operation of the higher voltage motor **36**. The photo-emitter-sensor **44** may be of a usual well known form, for instance, No. CK1121 photo-emitter-sensor manufactured by Raytheon Company.

The photo-emitter-sensor **44** is electrically connected for controlling the speed and operation of the motor **36**, as stated, for varying the output resistance in the motor circuit according to the current passing through the lamp **38** as controlled by the control member **18**. For accomplishing said output resistance control in the motor circuit, the photo-emitter-sensor **44** is connected to said motor **36** through an extended-range full-wave phase control circuit, generally indicated at **48**, for instance, that shown in FIG. 6 of the General Electric Company Publication No. 200.35 entitled "Triac Control for AC Power" by E. K. Howell. Furthermore, said phase control circuit **48** may include a capacitor **52** added to decrease the possibility of high frequency pulses being radiated into the power source.

Thus, the control member **18** is electrically connected to the motor **36** for controlling the speed and operation of said motor directly according to the power transmission through the control member, and the power transmission through the control member is directly dependent upon the hand pressure applied thereto by the dentist holding the dental handpiece **10**. Furthermore, the electrical circuit between the control member **18** and the motor **36** may include components for permitting the power transmission through the control member to be of greatly reduced voltage from that voltage necessary for driving the motor, thereby providing obvious safety ad-

vantages. According to the present invention, therefore, the dental handpiece **10** may be hand controlled by the dentist, eliminating the necessity of providing the usual foot rheostat control required to be operated by the dentist's foot.

As illustrated and described herein, the principles of the present invention have been applied to the control of the dental handpiece **10**, but it is clear that such principles may be equally well applied for the control of many other electrically driven or electrically actuated devices, all of which are fully contemplated within the scope of the present invention. Additionally, it is not intended to limit the broader principles of the present invention to the exact electrical components and electrical connections shown, the functional results thereof being the important feature.

I claim:

1. In a variable speed electrically controlled hand-held tool and an electrical control device therefor, the combination of: a hand-held tool having a pressure-sensitive electrical control member telescoped over and supported on said tool housing; said control member being engaged by said hand during said holding, said control member consisting of a rigid electrically conductive inner sleeve, pressure-sensitive means contiguous to said rigid conductive sleeve and an external flexible electrically conductive sleeve contiguous to said pressure-sensitive means, wherein pressure at any point on said flexible sleeve varies

the amount of transmission of electrical power therethrough proportional to pressure applied thereto; electrical conductors connected to each sleeve; actuating means operably connected to said tool for controlling variable speed operation of said tool dependent on the amount of electrical power transmitted to said actuating means; and electrical circuit means operably connected between said control member conductors and said actuating means for transmitting proportionate amounts of electrical power to said actuating means upon electrical power being transmitted through said pressure-sensitive means of said control member.

References Cited

UNITED STATES PATENTS

3,109,238	11/1963	Marks	310—62
3,386,067	5/1968	Costanzo	338—114
3,125,739	3/1964	Deibel	338—99
3,244,846	4/1966	Kopp	200—157
3,346,958	10/1967	Sinatra	200—157

ORIS L. RADER, Primary Examiner

L. L. HEWITT, Assistant Examiner

U.S. Cl. X.R.

318—345, 480; 338—99