METHOD AND DEVICE FOR PACKAGING POUCHES WITH SOFT CONTENTS IN FOLDING BOXES

Filed July 11, 1967

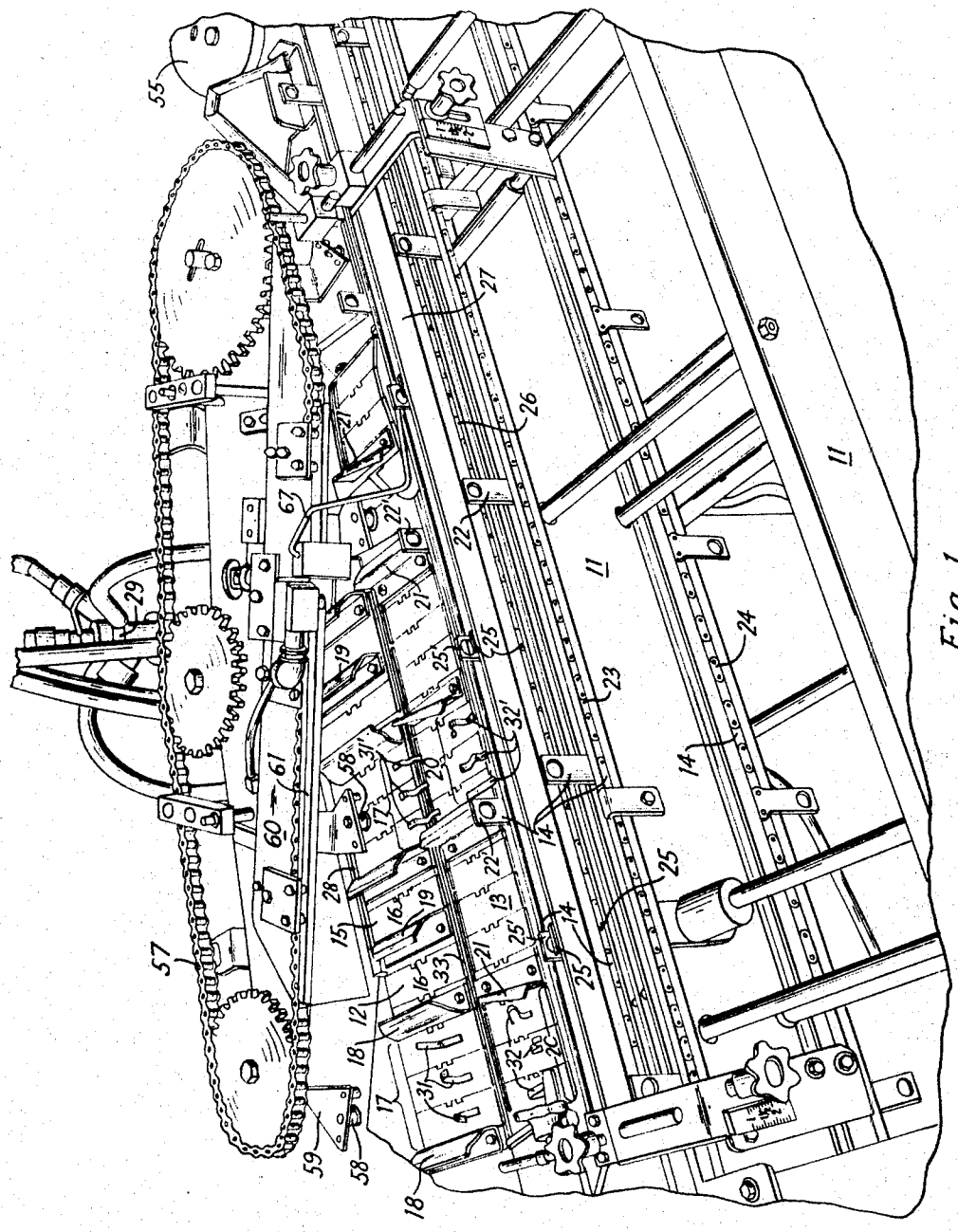

Fig. 1

INVENTOR.
William H. Mahncke
BY
Howard G. Russell
his ATTORNEY

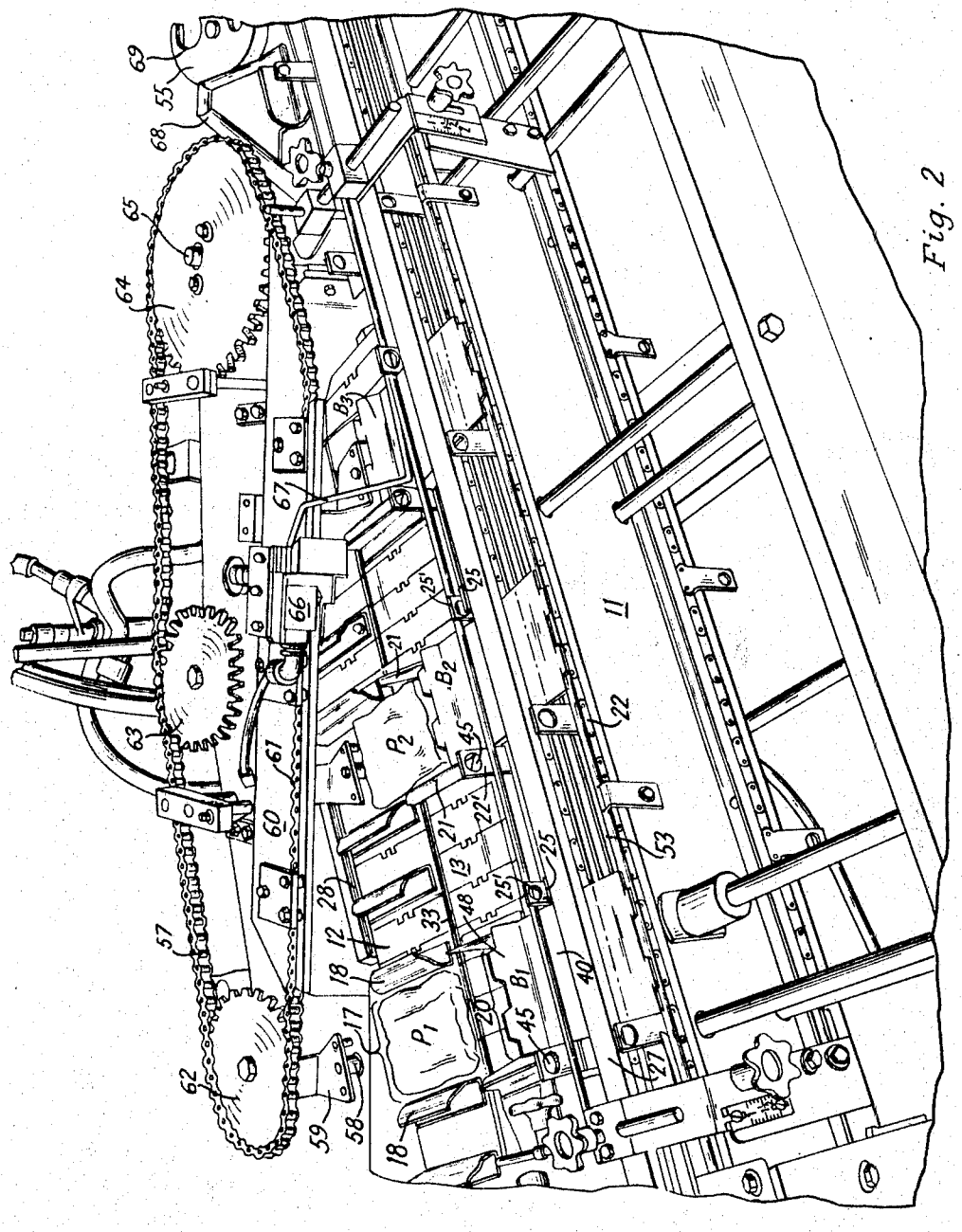

Fig. 2

INVENTOR.
William H. Mahncke
BY
Howard E. Russell
his ATTORNEY

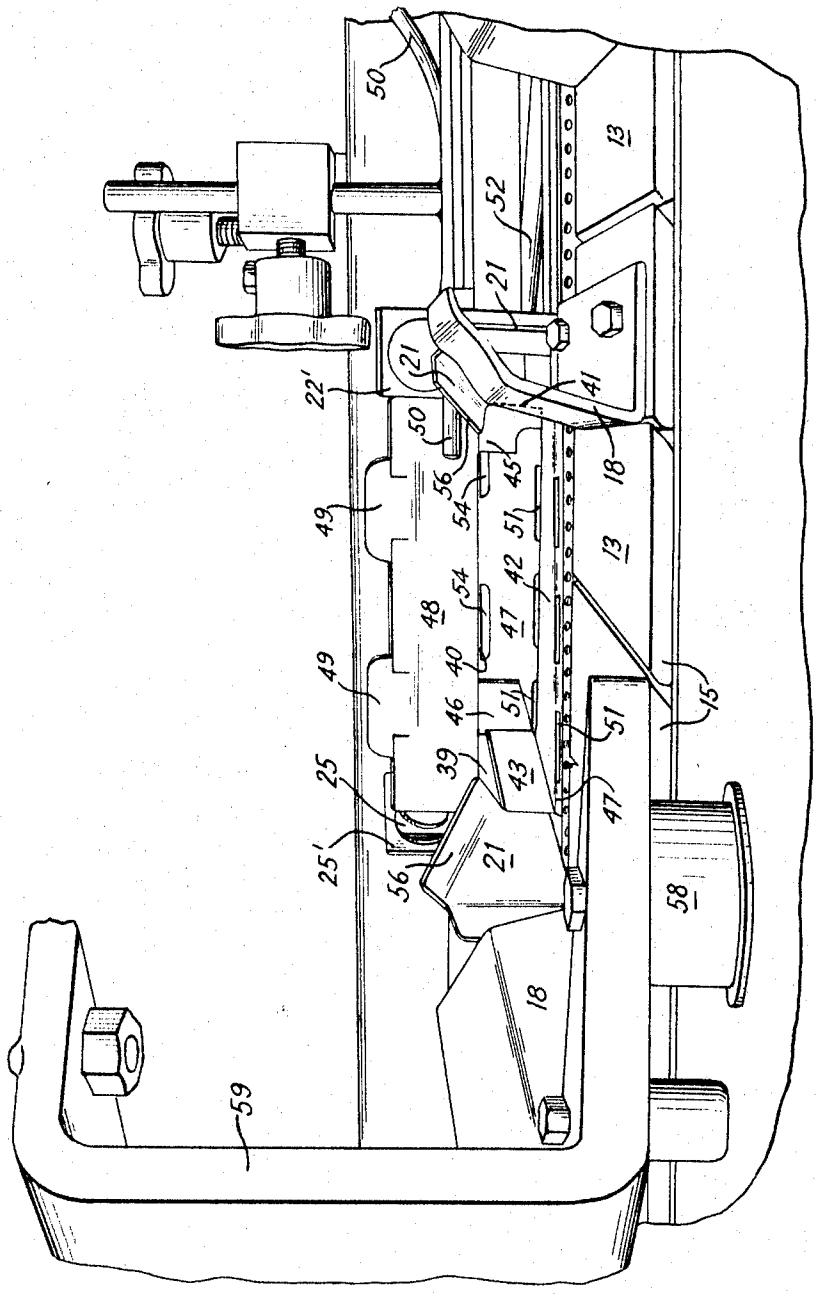

Fig. 3

INVENTOR.
William H. Mahncke
BY
Howard S. Russell
his ATTORNEY

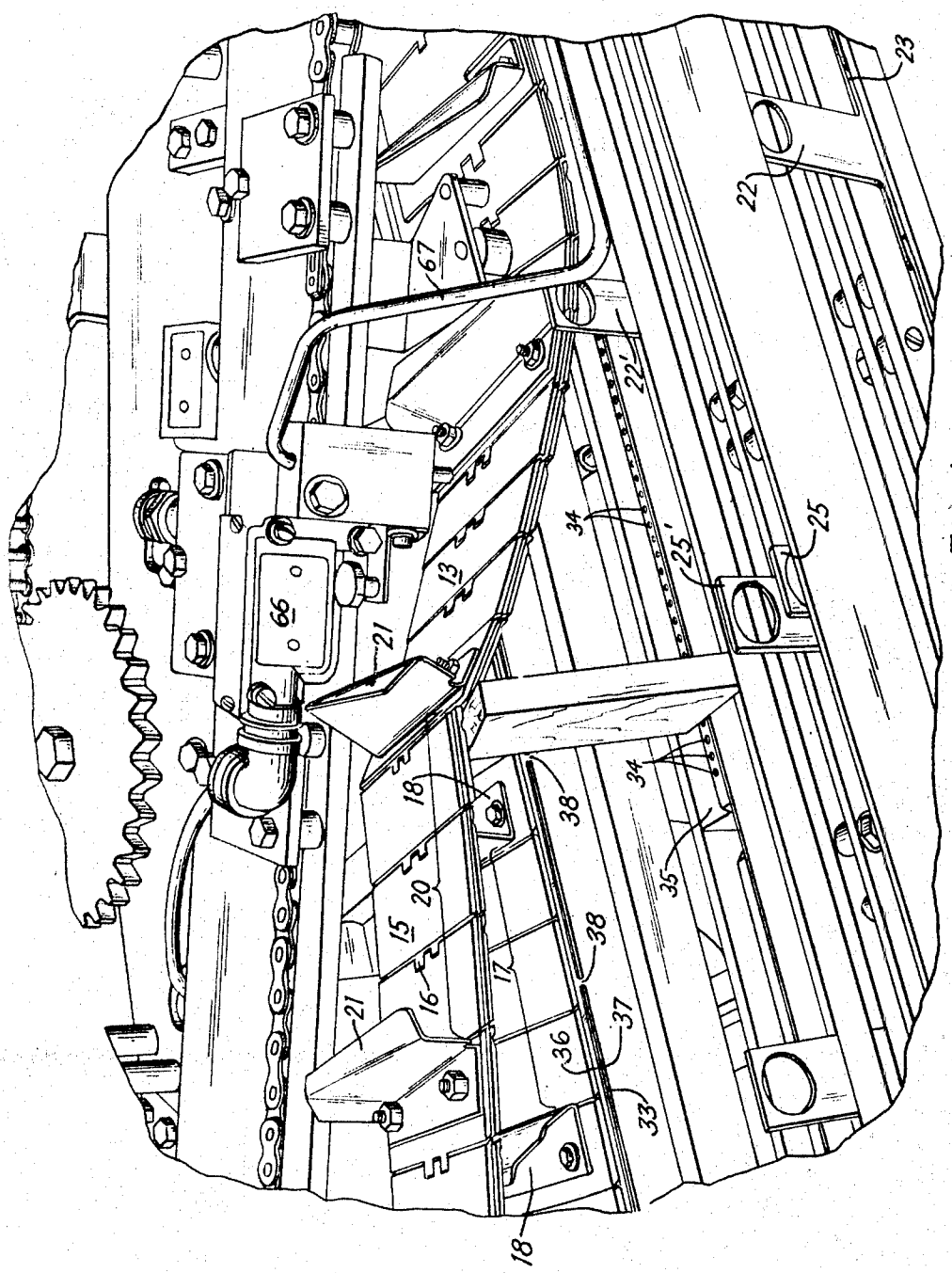

Fig. 4

INVENTOR.
William H. Mahncke
BY
Howard E. Russell
his ATTORNEY

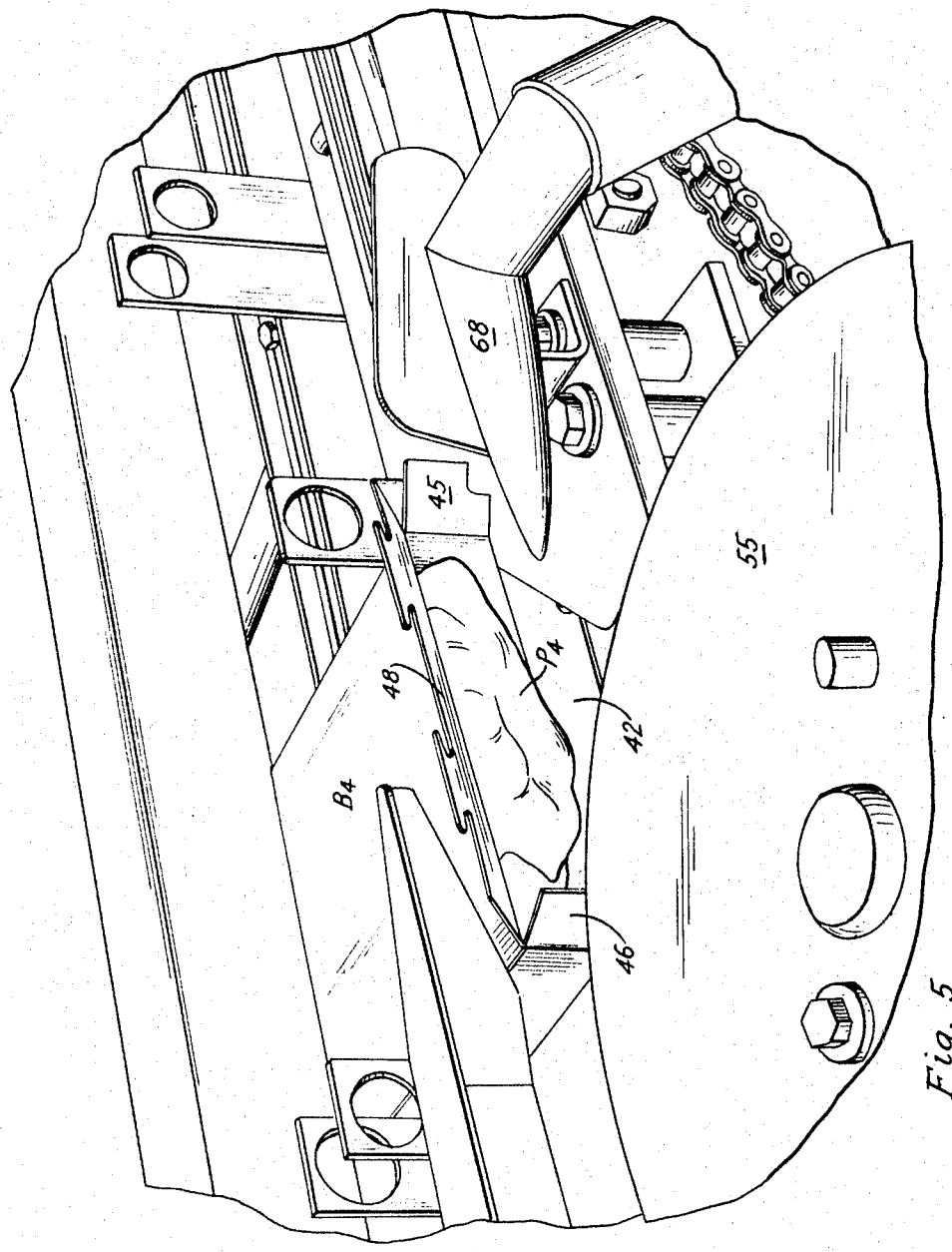

Fig. 5

INVENTOR.
William H. Mahncke
BY
Howard G. Russell
his ATTORNEY

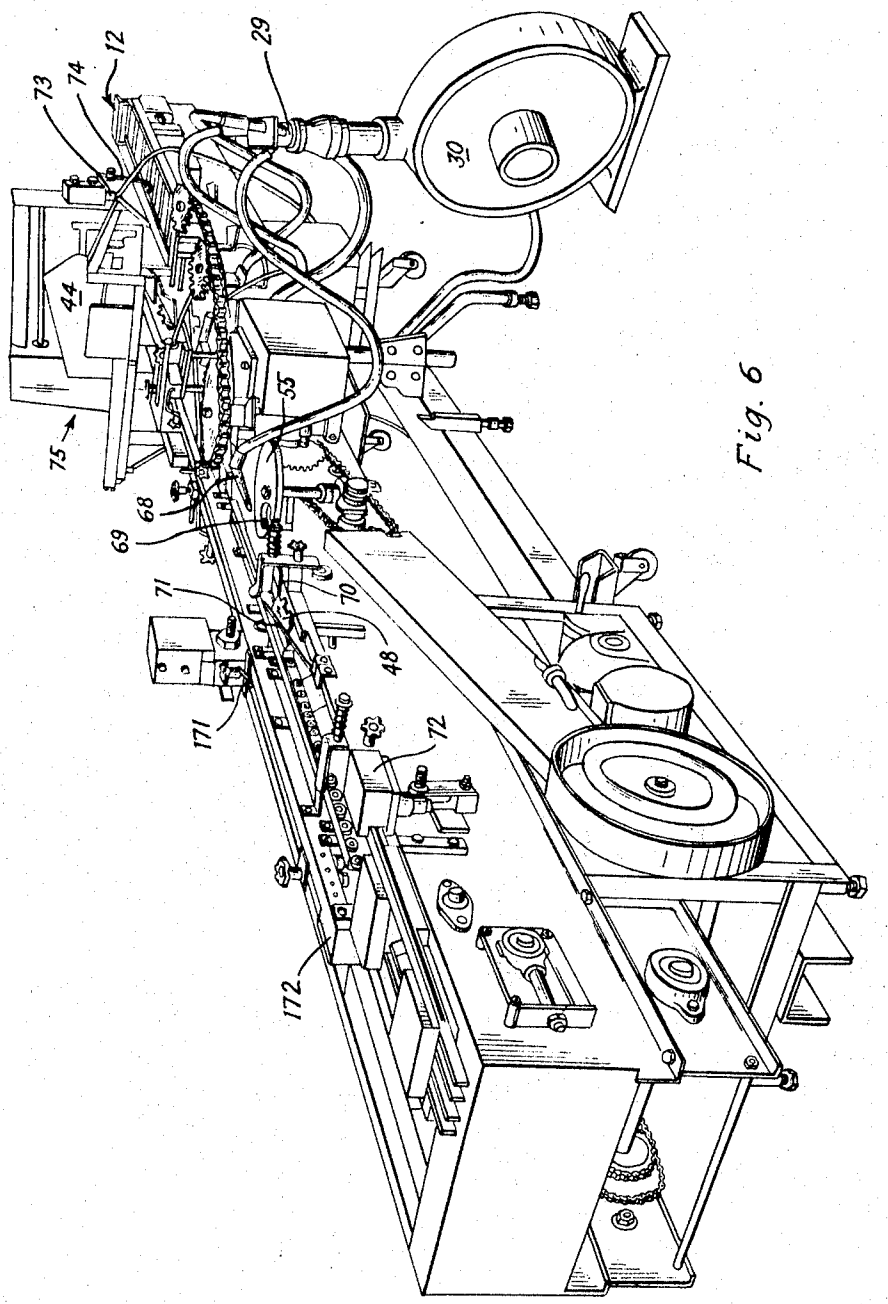

Fig. 6

INVENTOR.
William H. Mahncke
BY
Howard B. Russell
his ATTORNEY

United States Patent Office

3,453,800

Patented July 8, 1969

1

3,453,800

METHOD AND DEVICE FOR PACKAGING POUCHES WITH SOFT CONTENTS IN FOLDING BOXES

William H. Mahncke, San Mateo, Calif., assignor to Kliklok Corporation, New York, N.Y., a corporation of Delaware

Filed July 11, 1967, Ser. No. 652,559
Int. Cl. B65b *25/04, 39/14, 43/52*
U.S. Cl. 53—29 9 Claims

ABSTRACT OF THE DISCLOSURE

The present improvements involve the insertion of non-rigid pouches containing non-rigid material, for example sealed polyethylene bags containing soft fruit or paste-like contents, into folding boxes. The boxes and pouches are carried by two conveyors running side by side past an elongated nozzle arrangement alongside the pouch conveyor which discharges compressed air as a blanket transversely across both conveyors, thus floating the pouches into sleeve type cartons which at their far ends are partially open during loading. A mechanical pusher may additionally be provided to assist the pouches in their movement toward the boxes.

BACKGROUND OF THE INVENTION

Field of the invention

It is known to package rigid trays of frozen food, or food about to be frozen, in folding boxes or cartons of paperboard by transporting the trays and the boxes side by side on separate conveyors. The boxes or cartons are of conventional sleeve form comprising body panels articulated to both ends of the tubular box body. Prior to insertion of the trays into the cartons the initially flat collapsed tubular blanks are first squared to form an open sleeve whose far end is then closed by either sealing or mechanical locking of the closure panels. Mechanical pusher means then slide the trays in a direction transverse to the conveyor movement into the carton through the open near end which is subsequently folded closed and sealed or locked.

Attempts to package soft pouches in an equivalent manner leads to difficulties, as the pouches deform and bulge under the influence of a pusher. Incompletely inserted pouches interfere with the box closing mechanism which tends to damage them. Damage to pouches necessitates stopping of the packaging machine and frequently involves a clean up operation which is time consuming, particularly if the pouch contents comprise syrup or fruit juice.

Difficulties arise further from substantial variations in the friction between the pouches and the conveyor surface on which they rest.

The present improvements employ the use of a blast of compressed air transversely directed across the pouch conveyor for moving the pouches into the cartons.

Description of the prior art

It is known in this connection to sort postal packages transported on a conveyor band by blowing the packages off the conveyor by blasts of transversely directed jets of compressed air into appropriate wide mouthed chutes which the packages enter horizontally before being downwardly deflected by gravity. The jets of air are produced by appropriately controlled nozzles arranged in groups opposite the chutes, one, two or more nozzles of a group being actuated depending on the size and weight of the package.

2

It is further known to clear conveyor belts which normally carry staple fibers by horizontally disposed groups of nozzles on arms which may be swung at an acute angle across the belt in order to sweep the fibers into by-pass chutes alongside the belt.

Pouches cannot be handled in the known manner, as the path of the pouches under the influence of the stream of air is difficult to control. It is known, for example, that in the sorting of postal packages the packages change their orientation materially, tend to tumble, and must therefore be caught in correspondingly large-mouthed chutes.

SUMMARY OF THE INVENTION

The present improvements employ laterally extending partitioning elements on the conveyor between which the pouches rest for the purpose of limiting the spread of the stream of air within which the pouch is entrained. This arrangement not only results in good directional control, but also insures maintenance of a blanket of compressed air beneath the pouch, as the air blanket is prevented from spreading out at right angles to the partitions. The stream of air which thus transports and floates the pouches is essentially a laminar flow and its laminar characteristic is maintained to a substantial degree at the cartons by permitting at least a portion of the air stream to pass through the sleeve type carton, the far ends of which are only partially closed so as to prevent escape of the pouch through the far end while yet permitting the escape of air entering the carton.

The complete closing of the cartons takes place at locations downstream of the loading zone or station.

At the moment of loading of the cartons the sleeve type carton structure may be considered as being subjected to a difference in air pressure on opposite ends, the higher pressure promoting the entry of the pouch into the sleeve whose near closure flaps may be spread apart slightly to form an entrance funnel. The flow of air through the carton may further be aided by providing a condition of less than atmospheric pressure at the partially closed far end, for example by means of a suction box or vacuum plenum chamber along a portion of the conveyor.

Regardless of how the flow of air through the tubular boxes is brought about, pouch-deflecting turbulence is minimized and the incidence of failure of complete insertion of the pouches, even at high production rates of the order of over 100 per minute, is extremely low.

It is reduced to practically zero by the aid of a mechanical follower device which nudges recalcitrant pouches toward the sleeves which the pouches then enter because of the aforementioned difference in pressure at opposite ends.

It may be mentioned in this connection that it is known temporarily to float sheets of paper or paperboard on blankets of air during a procedure called "jogging" for the purpose of aligning the edges of the sheet with the sides of a stack on which the sheet is being deposited. In that case, however, oppositely pointed blasts of air are directed under the sheet about to be deposited, a procedure not applicable to pouches.

The various objects, features and advantages of the invention will appear more fully from the detailed description which follows accompanied by drawings showing, for the purpose of illustration, a manner in which the novel method may be carried out and mechanical equipment for performing the method. The invention also resides in certain new and original steps and sequences of steps hereinafter set forth and claimed.

Although the characteristic features of this invention which are believed to be novel will be particularly pointed out in the claims appended hereto, the invention itself, its objects and advantages, and the manner in which it

may be carried out may be better understood by referring to the following description taken in connection with the accompanying drawings forming a part of it in which:

BRIEF DESCRIPTION OF THE DRAWINGS

FIG. 1 is a perspective view of the loading station or zone of a packaging machine embodying the invention, the machine being shown without cartons and pouches, but the pneumatic system being shown in operation;

FIG. 2 shows the machine portion of FIG. 1 with pouches in three different stages of insertion into cartons;

FIG. 3 is a view on an enlarged scale, across the conveyors into a carton;

FIG. 4 is a perspective view, on an enlarged scale, of the machine portion of FIGS. 1 and 2, an intermediate conveyor being lifted off its track to expose a nozzle system associated with it;

FIG. 5 is a perspective view of a filled carton at a moment of engagement by an end flap folding device and opposite a final air nozzle for inserting the pouch to its full depth; and

FIG. 6 is a perspective view of the entire packaging machine of which FIGS. 1 to 5 are partial views.

In the following description and in the claims various details of structure and method will be identified by specific names for convenience. The names, however, are intended to be generic in their application. Like reference characters refer to like parts in the several figures of the drawings.

In the drawings accompanying and forming part of this specification certain specific disclosure of the invention is made for the purpose of explanation of broader aspects of the invention, but it is understood that details may be modified in various respects without departure from the principles of the invention, that the several steps of the method may be modified and that the invention may be practiced by other forms of elements than specifically shown.

DESCRIPTION OF A PREFERRED EMBODIMENT

Referring to FIG. 1, a main machine frame **11** supports three conveyors **12**, **13** and **14** on parallel tracks. Farthest remote from the observer is a pouch conveyor **12** composed of flat-topped links **15** which are centrally articulated to one another at **16**.

Compartments **17** are formed on the conveyor **12** by pairs of transversely extending partitions **18**. Further partition elements **19** are arranged about midway between the compartments for reasons which will appear later.

The flat-topped links **15** are preferably made of a tough plastic and it is preferred to use light colored links within the compartments **17** and dark colored links elsewhere. This enables the machine supervisor to spot any unfilled compartment in operation and also facilitates the manual placing of pouches on the conveyor, in the event this is done manually.

An intermediate conveyor **13** moves alongside the pouch conveyor **12** and at the same speed. It is also composed of flat-topped links **15** and has compartments **20** formed on it by partition elements **21** which are set at a slight slant in plan view, so as to be spaced slightly farther apart at the far side of the conveyor **13** adjacent conveyor **12**, and to be spaced slightly less on the near side than the width of the folding boxes to be filled. This is also apparent from FIG. 3 later to be described.

A carton conveyor **14** on the near side of the intermediate conveyor is preferably composed of several link chains provided with upwardly extending lugs and driven as a unit. The respective chains are conveniently located in the illustration by their lugs.

A pair of trailing lugs **22**, **22'** are carried by the outer pair of chains. The upper run of the nearest outer chain is seen at **23** and moves to the right. The return run of the same chain is seen at **24** and its lugs **22** point downwardly as the lower run moves to the left. The other outer chain is correspondingly constructed and arranged, but is not visible except for the lug **22'** thereon.

The lugs **22** and **22'** are transversely aligned. Their purpose is to push folding boxes along and to define the rear boundary of compartments in which the boxes are carried. The front boundary of the compartments is defined by a further pair of lugs **25**, **25'** mounted on a central link chain, or pair of link chains, visible at **26** just below a hold down rail **27**.

The several chains of which the conveyor **14** is composed move at the same speed. The width or length of each of its compartments is adjustable to accommodate boxes of different width. This is accomplished in a known manner by adjusting the central chain or chains **26** relatively to the outer chains.

A pneumatic system is provided to generate a stream or blast of air transversely across the conveyors and substantially parallel to the top surfaces of the conveyors **12** and **13** towards the box conveyor **14**.

A slit nozzle **28** extends along the far edge of the pouch conveyor **12** and is supplied with compressed air through a hose from a manifold **29** of a multistage rotary compressor **30** (FIG. 6).

In order to illustrate the action of the air system strips of paper **31**, **31'** were taped to the conveyor **12** within its compartments **17**. It is seen that the strips **31** in the compartment **17** farthest to the left, and outside the range of the nozzle **28**, are not acted upon by any air stream and that the strips **31'** in the next compartment are bent over towards the observer, thus indicating a fast moving blanket of air across the compartment. This flow of air displaces a pouch in the last mentioned compartment towards the intermediate conveyor **13**.

The far edge of the intermediate conveyor **13** is bordered by a further slit nozzle **33** fed by a separate supply hose to intensify the transverse flow of air and to add to the lifting or floating action produced by the air issued from the slit nozzle **28**.

The leftmost compartment **20** of the intermediate conveyor **13** is entering the range of the slit nozzle **33** and paper strips **32** flutter slightly. In the next compartment **20** to the right the strips **32'** lie almost flat and bent over to a greater degree than the strips of the compartment **17** of conveyor **12** with which comypartment **20** is aligned.

The construction of the slit nozzle **33** is best seen in FIG. 4. The nozzle is formed by appropriately bent lips **36**, **37** of sheet metal spot welded at intervals at **38**.

A further series of round nozzles **34** is provided in the top of a plenum chamber or box **35** supplied with compressed air for the purpose of lifting pouches slightly at the zone of entry into the boxes, as will later be seen.

Turning now to FIG. 2, pouches P arrive from the left in the compartments **17** of the pouch conveyor **12**. Boxes B arrive from the left in the compartments of the box conveyor **14** between leading lugs **25**, **25'** and trailing lugs **22**, **22'** and underneath the hold down rail **27**.

The boxes or cartons are of a conventional tubular or sleeve type style and comprise a box body composed of four body wall panels **39**, **40**, **41**, **42** and a glue flap **43** articulated to one another along parallel fold lines (see FIG. 3). The glue flap **43** is adhesively secured to the wall panel **39** resulting in the formation of a tubular structure which can be prefabricated and supplied as flat collapsed tubular blanks. These blanks are stacked in the magazine **44** of a machine (FIG. 6) of otherwise known construction which grasps the flat collapsed blanks, one by one, by means of vacuum cups, squares the blanks so as to give them an expanded tubular shape and inserts them into the compartments of the box conveyor **14**.

The box structure comprises end panels which close the sleeve structure when folded at right angles to the body wall panels **39** to **42**. The folded closure panels may either be glue sealed, heat sealed, or mechanically locked.

The illustrated box blanks are designed for mechanical

locking and comprise, at each end, a pair of opposite inner end flaps **45**, **46** (see FIG. 3) articulated to wall panels **41** and **39**, respectively, an inner end panel **47** and an outer end panel **48** fitted with locking tabs **49** insertable into insertion slots **51**.

It is seen in FIGS. 2 and 3 that the outer end panel at the mouth of the carton through which the pouch is to be inserted is folded upwardly and maintained in this position by a curved folding guide **50**. The inner end flaps **45** and **46** are folded away from the mouth in the manner of a funnel and are visible in FIG. 2 through the apertures in the trailing lugs **22'** at **45**. The inner end panel at the mouth of the carton is bent downward, adjacent the row of nozzles **34**, a small portion of the flap **47** being visible at the left forward box corner adjacent an insertion slot **51** for the locking tabs **49** (FIG. 3).

The far end of the carton body is partially closed before arriving at the loading station (see FIG. 3). The inner end flaps **45**, **46** are folded in by a rotary folder similar to the folder **55** shown in FIGS. 5 and 6, and the inner end panel **47** is folded thereover and maintained upright by a folding rail **52** (FIG. 3). The outer end panel extends horizontally (see FIG. 2) and is guided on a rail **53**.

Returning to FIG. 2, it is seen that the insertion slots **51** at the partially closed end act as air vents. Additional and larger air vents are provided by notched out edge portions **54** of the inner end panels. These portions may be of substantial area and are subsequently covered by the downfolded outer end panel when the carton end is closed.

Summarizing the condition at which the carton arrives at the loading station (FIG. 3): the entrance or mouth is open and its closure flaps are bent back in funnel fashion. The opposite end is partially closed, so as to retain an inserted pouch, but sufficiently open to permit passage of air through the tubular carton body and out the partially closed end.

Referring to FIG. 2, the leftmost pouch P_1 has not yet come under the influence of the slit nozzle **28**. The carton B_1 is in a position to receive the pouch.

The pouch P_2 in the next compartment is on its way to the carton B_2 and has moved partially onto the intermediate conveyor **13**, in which position an additional stream of air is directed against its underside from **33** and **34** (FIG. 3). The volume of compressed air between the pouch and the conveyor surfaces is restrained from spreading by the partition elements **18** of conveyor **12** and the elements **21** of the conveyor **13** which are provided with upper lips **56** curved over the path of the pouch. This arrangement (see FIG. 3) directs the pouch effectively into the carton.

In the third position from the left in FIG. 2 the pouch is almost completely inserted in the box shell B_3.

During the travel of the pouches across the conveyors the pouches perform a fluttering motion and experience very little friction.

Means may be provided for nudging recalcitrant pouches into the cartons positively to insure complete insertion before the carton moves into the range of the closing mechanism.

In the illustrated form of machine an overhead conveyor chain **57** with depending lugs **58** on brackets **59** comprises a slanted run within which the conveyor is guided between a track plate **60** and front rail **61**.

The depending lugs are adapted to engage the trailing portion of lagging pouches. In normal operation, however, the pouches are not contacted by the lugs, but move ahead of them.

The linear speed of the conveyor **57** is slightly higher than that of conveyors **12** and **13** so that its component in the direction of the conveyors **12**, **13** is equal to the rate of the conveyors.

The chain **57** is trained around three sprocket wheels **62**, **63** and **64** of which **62** and **63** are idlers and **64** is a drive wheel mounted on a shaft **65** driven from the main machine drive over an appropriate gear train.

The chain assembly also supports a microswitch **66** fitted with a depending feeler arm **67** which extends into the path of the boxes and stops the machine in case of absence of a box, so as to prevent a filled pouch from being placed on the box conveyor.

The loaded box B_3 continues moving to the right into a position opposite a further nozzle **68** which directs a final blast of air against the end of the pouch. This is a further precaution against incomplete insertion. In the position shown in FIG. 5 the box is identified as B_4 and the pouch as P_4. In this illustrated position the end flaps **45**, **46** are released and the leading flap **46** has engaged the periphery of the rotary folder **55** which folds the flap into closing position. The folder is provided with a peripheral cutout **69** which subsequently catches the trailing flap **45** and folds it into closing position.

The inner end panel of the box is then folded up by an upwardly slanted folding bar **70** (FIG. 6) and the outer end panel **48** is folded down by a similar downwardly slanted bar **71**. A tucking device **72** finally inserts the locking tabs **49**, thus completing the box closing procedure.

On the opposite side of the machine a corresponding tucking device **172** is mounted and the folding bar which downwfolds the outer end panel of the far end of the box is seen at **171**.

Referring further to FIG. 6, a microswitch **73** with a depending feeler arm **74** is mounted over the pouch conveyor **12** near the far end of the machine. This feeler mechanism detects the absence of a pouch from any of the compartments of the pouch conveyor **12**. If a pouch is absent from a conveyor compartment, the arm **74** drops to its lowest position and a signal goes out to the blank squaring unit generally designated as **75** to omit a blank. As a result the corresponding compartment of the box conveyor remains vacant.

It is thus assured that the arrival of a box is always made dependent on the simultaneously arrival of a pouch at the loading zone.

As the compartments of the pouch conveyor are spaced a false signal would be generated if the arm **74** were permitted to drop into the space between compartments **17** (FIG. 1). It is for this reason that an additional partition element **19** is installed between the compartments **17**, which then maintains the arm **74** elevated between compartments.

The blank squaring unit **75** is of known construction and a detailed disclosure of it is found in Patent 3,142,-232, of July 28, 1964, to C. J. Pierce, Jr.

SUMMARY OF OPERATION

Pouches P arrive from the left on conveyor **12** (FIG. 2) and for each pouch a box arrives on the conveyor **14**. When the pouch moves into the range of a blanket-like blast of compressed air issued from the slit nozzle **28** alongside conveyor **12**, it becomes entrained in the flow of air and moves across an intermediate conveyor **13** whose transverse partitions funnel it toward the open mouth of the box B which lies in line with the pouch. Additional air issues from a further slit nozzle **33** and hole nozzles **34** which help maintain the air cushion on which the pouch floats.

The box end facing the pouch is open mouthed and the opposite end is only partially closed to permit the air stream to pass throught the box.

Depending lugs **58** of an overhead conveyor contact and push a pouch in the event it is not properly carried by the air stream.

After insertion of the pouch, the mouth end of the carton and the still unclosed end panel or panels at the opposite box end are closed at an area which lies just beyond the right boundary of FIG. 2.

What is claimed is:

1. The method of inserting pouches filled with contents into cartons comprising four walls articulated to one another to form a sleeve, and closure flaps on opposite ends of the sleeve

which method comprises conveying the carton sleeves on a carton conveyor, the carton axis being substantially horizontal and transverse to the direction of advance;

conveying the pouches on a pouch conveyor of the table top type moving alongside the carton conveyor and substantially at the same speed;

partially closing the far end of the carton sleeves to a degree sufficient to prevent escape of a pouch therefrom while yet permitting passage of a flow of air through the sleeve;

directing a blast of air onto and across said pouch conveyor at a zone at which the cartons on the adjacent conveyor are partially closed to transfer the pouch into the partially closed sleeve through its near end;

and then completely closing the far end of the sleeve and its near end.

2. In the method of inserting a pouch of contents into a carton of the sleeve type comprising all panels articulated to one another and closure panels articulated to opposite ends of the sleeve, in which method a pouch and a carton are conveyed substantially parallel to each other and substantially at the same level and in which a blast of air is directed against the pouch to propel it towards the carton, the step of closing the far end of the sleeve carton to a degree sufficient to prevent escape therefrom of a pouch entering the sleeve, which pouch is accompanied by a volume of air moving with the pouch, but maintaining the far end sufficiently open to vent air therethrough.

3. In the method of erecting a carton from a sleeve type carton blank comprising body wall panels articulated to one another so as to form a sleeve and closure flaps articulated to opposite ends of the sleeve, inserting pouch enclosed contents in the carton and closing the resulting package, the method comprising squaring the originally flat collapsed tubular blank so as to form a hollow sleeve; advancing the sleeve on a sleeve conveyor on which the sleeve is supported against recollapsing substantially horizontal and with its axis transverse to the direction of advance towards and past a loading station; and conveying the pouches on a substantially parallel conveyor to the loading station at which a pouch is aligned with a sleeve into which it is to be inserted and at which transfer means are provided for tranferring the pouch into a sleeve aligned therewith characterized in that

(a) certain closure flaps at the far end of the sleeve are folded into carton closing position prior to arrival of the sleeve at the loading station to prevent escape of the pouch therefrom while yet leaving at least one closure flap in open position to permit passage of air through the far end of the carton at the loading station; in that

(b) the transfer of the pouch from the pouch conveyor into the sleeve is effected by a substantially horizontally directed blast of air; and in that

(c) the closure of the far end of the carton sleeve is not completed until after insertion of the pouch therein.

4. The method of combining as a package a pouch of contents and a carton comprising four body wall panels articulated to one another along parallel fold lines so as to form a tubular carton body and four end closure flaps articulated to each of the opposite ends of the body, the method being characterized by the steps of squaring a flat collapsed tubular carton blank so as to form a squared tubular shell, advancing said squared shell in a direction substantially normal to its axis along a certain path; advancing a pouch of contents along a second path substantially parallel to said certain path and at substantially the same rate; folding at least two, but less than four, closure flaps into closing position at the far end of the shell with respect to the pouch; directing a transverse blast of air against one end of the pouch in a direction in which at least a portion of the said air passes into said shell and out through its incompletely closed far end, said blast of air transversely propelling the pouch into said shell while pouch and shell are advancing; and finally folding into least a portion ofthe said air passes into said shell and closing position those end panels at the far and the near end of the shell which had not yet been folded into closing position.

5. The method of enclosing a pouch of contents within a tubular enclosure of paperboard which comprises advancing said pouch and said enclosure side-by-side in a direction at right angles to the axis of the tubular enclosure; partially closing the far end of the tubular enclosure to a degree sufficient to retain the pouch while yet permitting passage of at least a portion of the hereinafter recited blast of air therethrough; directing against said pouch a blast of air transversely to the direction of advance to move said pouch into the tubular enclosure through its near end; and thereafter completing the closure of the far end and closing the near end of the tubular enclosure.

6. A device for packaging a pouch of contents in a carton of the type comprising a body portion formed of body wall panels articulated to one another and closure panels at both ends of the body portion, said closure panels being adapted to be folded at right angles to the wall panels to close the carton, the device comprising

a box conveyor comprising upstanding lugs forming compartments for carrying therein cartons whose body panels are in squared condition;

a pouch conveyor on the near side of, and parallel to, said box conveyor, said pouch conveyor being of the flat top type and comprising upstanding lugs forming compartments in which pouches may rest, said compartments being aligned with the compartments of the box conveyor, both conveyors being driven at the same speed;

a nozzle elongated in the direction of travel of the conveyors for discharging air under pressure across the pouch conveyor at a loading station, the air being directed against the end, and under, pouches on the pouch conveyor for moving said pouches towards said box conveyor;

first end panel folding means on the far side of the box conveyor and upstream of said loading station for folding certain, but less than all, of the respective end panels into closing position so as to leave the far end of the carton partially open for passage of air through the carton and out its far end;

second end panel folding means on the far side of the box conveyor and downstream of said loading station for folding the remainder of the far end panels into closing position;

and means on the near side of the box conveyor and downstream of said loading station for folding the end panels of the near side of the carton into closing position.

7. A device according to claim 6 in which a further conveyor is provided above the pouch conveyor at the loading station, said further conveyor comprising a portion obliquely disposed with respect to the direction of advance of the pouch conveyor and progressively approaching the box conveyor as the conveyors advance, said further conveyor comprising depending lugs adapted to engage the trailing portion of pouches against which the air blast is directed to aid, positively, in advancing the pouches towards the boxes.

8. A device according to claim 6 in which a transfer conveyor is arranged between the pouch conveyor and the box conveyor, said transfer conveyor being of the

flat top type and substantially level with said pouch conveyor, the transfer conveyor comprising upstanding lugs substantially in line with the lugs of the pouch conveyor; and a further longitudinally extended nozzle between the pouch conveyor and the transfer conveyor for discharging a further stream of air across said transfer conveyor towards said box conveyor.

9. A packaging device comprising, in combination, a first carrier comprising spaced partition elements for supporting on the carrier, and between said elements, sleeve type carton blanks in squared tubular condition, said blanks comprising end closure flaps at both ends; a second carrier comprising a flat top surface and spaced transversely extending partition elements for supporting on the top surface and between said last named elements pouches containing contents; means for moving said two carriers side-by-side with the partition elements substantially in alignment; a longitudinally extended nozzle for directing a flow of compressed air across the surface of said second carrier and against any pouch thereon towards said first carrier and through any squared tubular blank thereon within a loading station; means for partially maintaining closed within the loading station the far end of the squared tubular blank to retain a pouch transferred into it by the compressed air while yet permitting such air to pass through the tubular blank and out its far end; and means downstream of the loading station for closing the end closure flaps at both ends thereby completing formation of a package.

References Cited

UNITED STATES PATENTS

2,970,418	2/1961	Mulvany et al.	53—251
3,105,337	10/1963	Clanin et al.	53—251
3,295,289	1/1967	Critchell	53—28
3,329,469	7/1967	Stadelman	302—11

THERON E. CONDON, *Primary Examiner.*

R. L. SPRUILL, *Assistant Examiner.*

U.S. Cl. X.R.

53—37, 252, 284; 198—20

PO-1050
(5/69)

UNITED STATES PATENT OFFICE
CERTIFICATE OF CORRECTION

Patent No. 3,453,800 Dated July 8, 1969

Inventor(s) William H. Mahncke

It is certified that error appears in the above-identified patent and that said Letters Patent are hereby corrected as shown below:

Column 7, line 25, for "all" read --wall--

Column 8, line 10 should be deleted since it is a repetition of Column 8, line 6 - "least a portion of the said air passes into said shell and"

SIGNED AND
SEALED

OCT 21 1969

(SEAL)
Attest:

Edward M. Fletcher, Jr.
Attesting Officer

WILLIAM E. SCHUYLER, JR.
Commissioner of Patents