June 17, 1969

E. W. ANTHON

3,450,051

ROTARY PUMP

Filed March 22, 1967

Sheet 1 of 5

FIG.1.

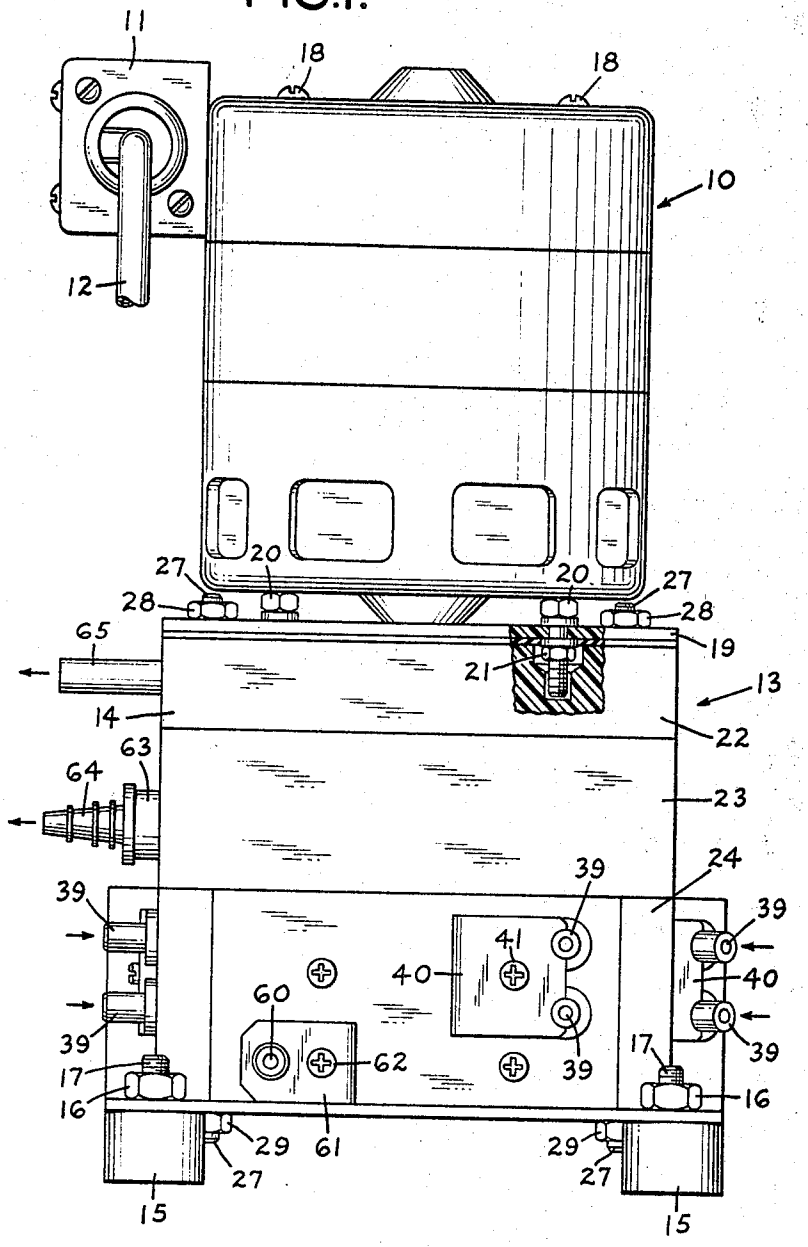

INVENTOR
ERIK W. ANTHON
BY
Albert H. Graddis
ATTORNEY

ROTARY PUMP

Filed March 22, 1967

FIG.2.

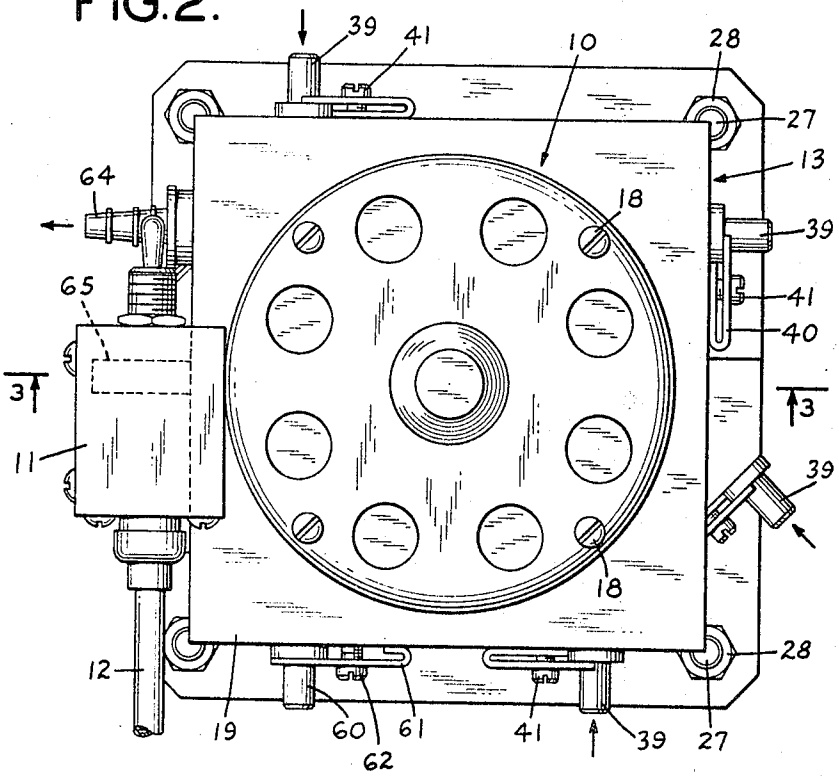

FIG.3.

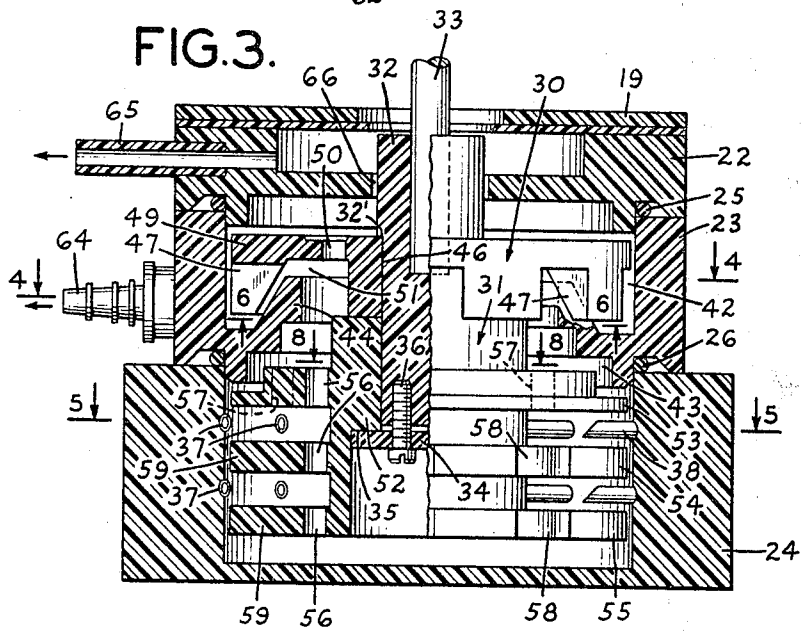

INVENTOR
ERIK W. ANTHON
BY
Albert H. Graddis
ATTORNEY

FIG.4.

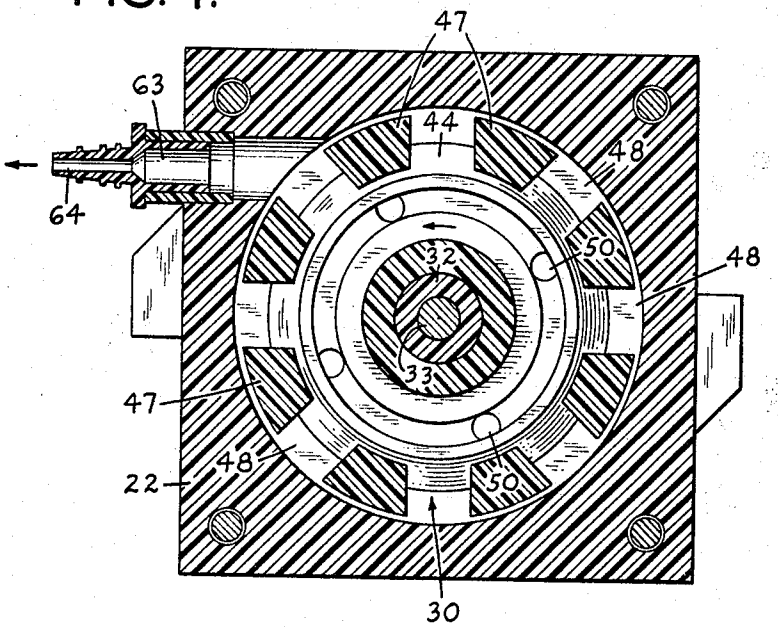

FIG.5.

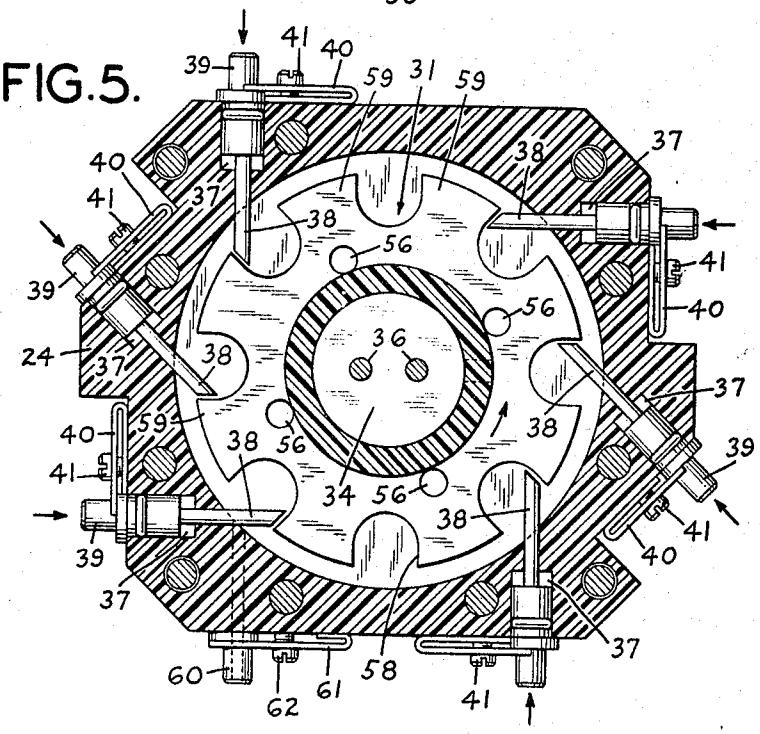

INVENTOR
ERIK W. ANTHON
BY
Albert H. Graddis
ATTORNEY

FIG.6.

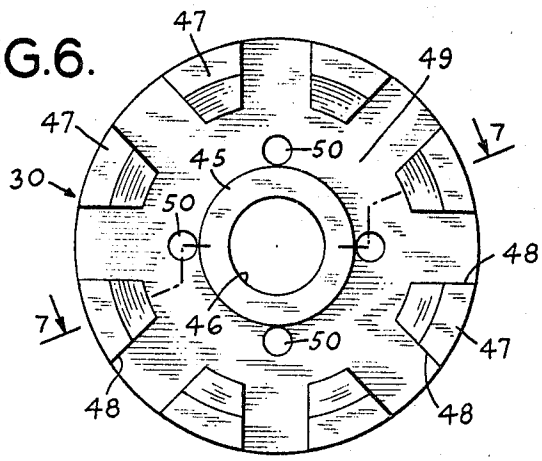

FIG.7.

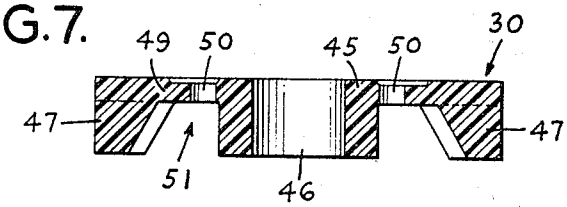

FIG.8.

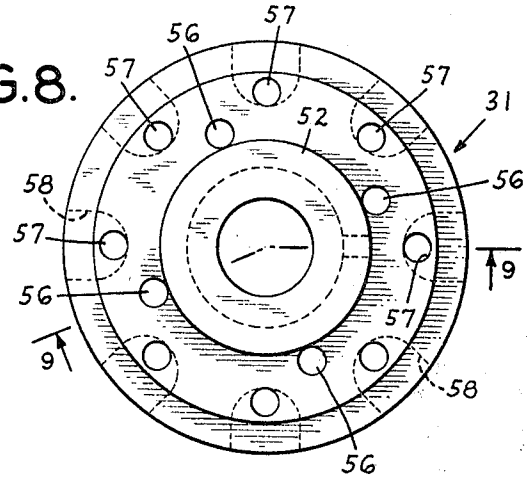

FIG.9.

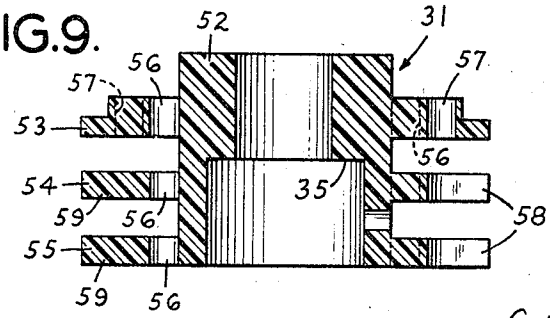

INVENTOR
ERIK W. ANTHON
BY
Albert H. Graddis
ATTORNEY

FIG.10.

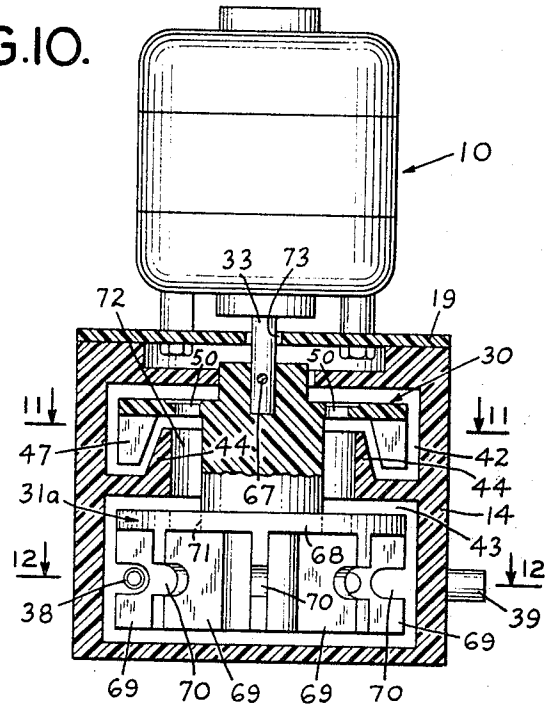

FIG.12.

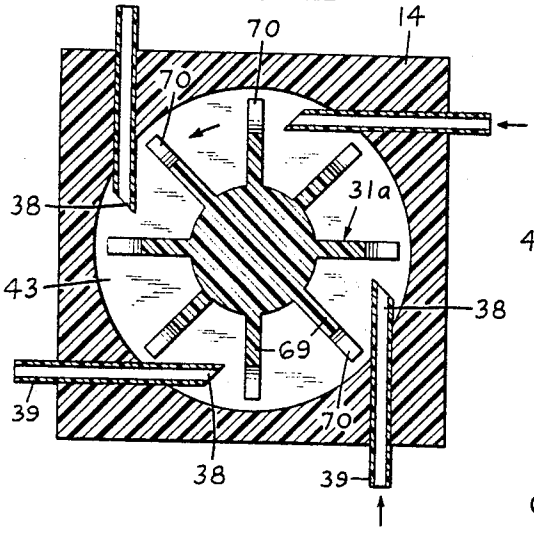

FIG.11.

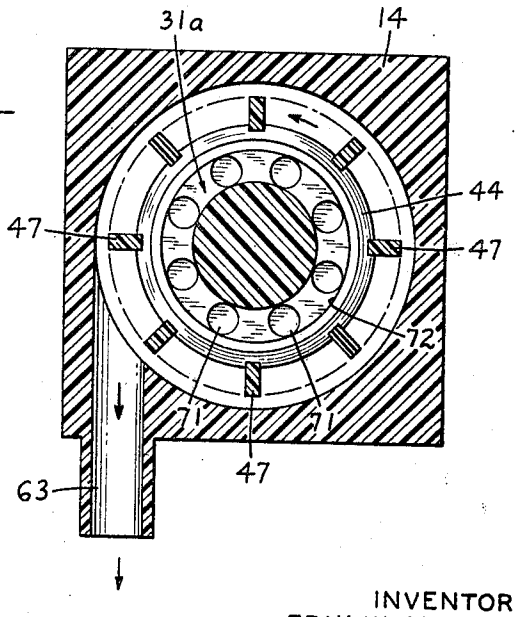

INVENTOR
ERIK W. ANTHON
BY
Albert H. Graddis
ATTORNEY

United States Patent Office

3,450,051

Patented June 17, 1969

1

3,450,051
ROTARY PUMP

Erik W. Anthon, Kensington, Calif., assignor, by mesne assignments, to American Optical Corporation, Southbridge, Mass., a corporation of Delaware

Filed Mar. 22, 1967, Ser. No. 625,152
Int. Cl. F04b *23/04, 19/16*
U.S. Cl. 103—5 5 Claims

ABSTRACT OF THE DISCLOSURE

A rotary pump whose casing is divided by a partition into an intake chamber containing an intake impeller and a discharge chamber containing a discharge impeller. One or more intake ports extend into the intake chamber. The intake chamber is primed with liquid and the impeller rotated. The velocity of the liquid moving past the intake ports produces a suction which is capable of drawing both air and liquid into the intake chamber. The liquid drawn in overflows into the discharge chamber and is ejected by the discharge impeller. The air is vented.

The present invention relates to a novel rotary pump means for transporting fluids and relates more particularly to a rotary pump adapted to act simultaneously upon a plurality of streams each from a separate source whereby the several streams are combined within the pump and thereafter discharged as a single stream. The novel pump means of this invention can be utilized as a proportioning means which is highly effective for combining together and intimately mixing several fluids and its finds particular application when operated as a scavenging pump for continuously and simultaneously drawing fluids from a plurality of sources, the combined fluids being thereafter discharged from the pump.

The use of automated systems which are programmed for analyzing blood serum, urine, body fluids and like liquid materials including process streams in many chemical manufacturing operations for their various chemical components has been gaining wide acceptance. Systems are available which can be programmed to sample, dilute, add reagents, incubate, read and then print out the analytical test results with remarkable efficiency and accuracy. The systems are programmed to then rinse, wash and dry the individual vessels in which the analytical procedures are carried out so that they will be ready for the next sample. Such a system is described, for example, on p. 18 of "Chemical & Engineering News," vol. 44, published on Nov. 7, 1966.

Since these systems repeat a rapid sequence of numerous steps including cleaning, mixing and rinsing it is essential that the various spent solutions including the excess sample, reagent, wash and rinse solutions be drained efficiently and the system cleaned before commencement of the next step in order to avoid error by cross-contamination between samples. Transfer of liquids in the automated systems available is now accomplished by individual suction, aspirator or centrifugal pumps. The major disadvantage of such systems is that many pumps have to be employed in order to carry out these various steps and the several pumps have to be switched on and off quite rapidly to drain the many elements of the complex system in a manner that is entirely satisfactory. Relying upon a plurality of pumps not only raises the noise and vibration level but also multiplies the possibility of malfunction.

Accordingly, a primary object of this invention is to provide a single pump means which is capable of drawing liquids or air from a plurality of sources simultaneously and efficiently.

2

Another object of this invention is to provide a pump for transporting fluids which can be formed of chemically inert materials, is quite in operation, self-priming after being started up, which has few moving parts and does not require shaft seals or other moving seals and which operates efficiently and effectively regardless of load conditions.

Other objects and advantages of this invention will become apparent from the following detailed description and the accompanying drawings.

In the drawings:

FIG. 1 is a side elevational view of the pump showing the drive motor mounted on the pump casing, certain of the intake ports leading into the pump casing and the discharge port.

FIG. 2 is a top view of the pump showing the drive motor mounted on the pump housing, the control switch for the drive motor as well as the intake and discharge ports of the pump mechanism.

FIG. 3 is a vertical view of said pump partly in section and partly broken away taken along line 3—3 of FIG. 2.

FIG. 4 is a top view, in section, of said pump taken along line 4—4 of FIG. 3, the view being in the direction of the arrows.

FIG. 5 is a sectional view of the pump taken along line 5—5 of FIG. 3 in the direction of the arrows.

FIG. 6 is a bottom view, looking upward, of the base of the upper impeller which forms part of the impeller system of the rotary pump of this invention.

FIG. 7 is a sectional view of the upper impeller taken along line 7—7 of FIG. 6 in the direction of the arrows.

FIG. 8 is a top view of the lower of the two impellers of the dual impeller system of this rotary pump.

FIG. 9 is a side elevational view, in section, of the lower impeller taken along the line 9—9 of FIG. 8.

FIG. 10 is a side elevational view of a modified embodiment of the pump of this invention with the impeller structure partly in section and partly broken away to show the arrangement of the impeller within the casing.

FIG. 11 is a sectional view of the pump housing and the upper impeller taken along the line 11—11 of FIG. 10 in the direction shown, and

FIG. 12 is a sectional view of the pump housing and the lower impeller taken along the line 12—12 of FIG. 10 and in the direction shown.

Like numerals indicate like parts throughout the several views in the drawings.

Referring now to the drawings and more particularly to FIG. 1 the pump device of this invention is powered by a suitable electric motor drive means generally indicated by reference numeral **10** provided with a switch **11** for the on-off control of the power supply to motor **10** which passes through power feed line **12**.

Supporting motor **10** is the pump means itself, generally indicated by reference numeral **13** and consisting of a sealed housing **14** which is preferably formed of an inert material and in sections for ease of assembly, the lower section of which is provided with a plurality of feet **15**, usually of rubber, each of which is held in place by a nut **16** and a bolt **17**. Motor **10** is joined rigidly to casing **14** by a plurality of bolts **18** which pass down through the housing of motor **10** and through pump cover plate **19** to which they are rigidly fixed by means of nuts **20** and **21** shown in the detail broken away. Housing **14**, as described, is formed in several sections, an upper section **22**, a middle section **23** and a lower section **24** as shown in FIG. 3 with the spaces between the sections being provided with sealing rings **25** and **26**. Cover plate **19** and the individual sections of housing **14** are held together in assembled position by means of threaded tie-rods **27** provided with upper nut **28** and lower nut **29** which, when taken up tight not only seal the sections of the housing

against each other but also act to maintain motor **10** in the desired position on the housing.

The rotor elements which create the desired pumping action when the drive motor is switched on are the sole moving parts of pump **13** and these rotor elements are all contained within housing **14**.

As shown in assembled position in FIG. 3, the rotor elements comprise an upper impeller **30**, also shown in FIGS. 4, 6 and 7, and a lower impeller **31**, also shown in FIGS. 5, 8 and 9, which are carried in abutted position by a stud shaft **32** provided with an offset shoulder **32'** against which upper impeller **30** is suitably seated so that both impellers are properly placed longitudinally on stud shaft **32**. Stud shaft **32** is attached to the drive shaft **33** of motor **10** by suitable means (not shown) so that impellers **30** and **31** rotate as a unit with drive shaft **33**. Upper impeller **30** and lower impeller **31** are held tightly butted up against each other and in fixed position on stud shaft **32** by means of a retainer disc **34** which is adapted to press against internal shoulder **35** of lower impeller **31** when screws **36** are tightened up thus causing the top surface of upper impeller **30** to be tightly seated against shoulder **32'** of stud shaft **32**. When the impellers are assembled in this position drive shaft **33** of motor **10** rotates both upper impeller **30** and lower impeller **31** with it as a single unit. No bearings are necessary since no contact with any of the inner surfaces is made.

A plurality of inlet ports **37** are provided which lead into pump housing **14**. Seated in ports **37** are intake pipes **38** which communicate with external nipples **39** to which suitable piping (not shown) may be connected to introduce the fluid to be pumped. Each intake pipe and nipple assembly is held in position in inlet ports **37** by means of a retaining clamp **40** held down by a slotted bolt **41** suitably threaded into an insert in housing **14**. As shown in FIG. 1, clamps **40** may be so designed as to hold two inlet pipe and nipple assemblies is position.

As shown in FIG. 3 pump housing **14** is divided by the several sections which form the housing into an upper chamber **42** in which upper impeller **30** normally rotates and a lower chamber **43** in which lower impeller **31** normally rotates, the division being effected by the provision of a circular partition **44**. Partition **44** is of a generally truncated conical shape and is formed integrally with the middle section **23** of housing **14**.

The structural configuration of upper impeller **30** is more clearly shown in FIGS. 6 and 7. FIG. 6 is a view looking upward showing the bottom face of impeller **30**.

Upper impeller **30** comprises a central hub **45** having a centrally disposed hole **46** for receiving stud shaft **32** with which impeller **30** rotates as described above. Impeller **30** carries a plurality of radially disposed depending vanes **47** which alternate about the periphery of impeller **30** with slots **48**. Vanes **47** are integral with a web **49** which forms the top of the impeller. Web **49** is pierced by a plurality of air vent holes **50** spaced about hub **45** and which extend into the annular space **51** between hub **45** and vanes **47**.

Lower impeller **31** is also formed with a central hub **52** which carries a plurality of horizontal circular plates **53**, **54** and **55** spaced apart vertically. Each of said horizontal plates is perforated by a series of circumferentially spaced holes **56**. Upper plate **53** is also pierced by a second group of holes **57** whose function will be described hereinafter.

Circular plates **53**, **54** and **55** are each notched out at **58** to form a series of circumferentially spaced vanes **59** superimposed one above the other. The vertical spacing between horizontal circular plates **53**, **54** and **55** is provided so that when rotated they will clear the tips of intake pipes **38**.

A sludge drain **60** is set in lower section **24** of pump housing **14** to permit cleaning and draining the interior of pump housing **14** if desired. Drain **60** is normally closed during operation and is held in position by a clamp **61** secured to housing **14** by bolt or fastener **62**.

As shown particularly in FIGS. 1, 3 and 4 pump **13** discharges the fluid intake through a discharge port **63** which communicates with upper chamber **42** of pump housing **14** through middle section **23**. Suitable piping (not shown) may be connected to an external nipple **64** which leads from port **63** in order to carry the discharge of pump **13** to any point to which it is to be delivered.

If discharge port **63** is blocked for some reason any overflow from pump housing **14** can leave through an overflow port **65** located in upper section **22** of the pump housing **14**. As shown in FIG. 3, overflow port **65** communicates with the inside of pump housing **14** through a space **66** located between stub shaft **32** and the top of upper section **22** through which shaft **32** normally passes.

To operate the pump of this invention lower section **24** of pump housing **14** is primed with a liquid until about half full. The liquid can be introduced, for example, through discharge port **64**. Intake pipes **38** are connected by suitable tubing to whatever systems are to be drained and discharge port **64** is then connected to the point to which the combined liquid is to be delivered. Any intake pipes **38** which are not to be utilized may be capped and sealed off or allowed to remain open and suck air into the pump.

Drive motor **10** is then switched on. As drive shaft **33** rotates it also causes both upper impeller **30** and lower impeller **31** to rotate simultaneously in the counter-clockwise direction shown in FIGS. 4 and 5.

The rotation of impeller **31** sets the liquid present in the base of the pump into circular motion due to the action of vanes **59**. The centrifugal force imparted to the liquid by the rotating vanes **59** of impeller **31** causes the liquid to rise up the sides of bottom section **24**. The resulting vortex creates an annular body of liquid within section **24** which has a cylindrical and almost vertical free inner surface.

The intake pipes **38** are so positioned as to be somewhat below the free inner surface of the rotating body of liquid. The high velocity of the liquid passing the ends of intake pipes **38** creates a partial vacuum at the opening of said intake pipes **38**. This vacuum acts to draw fluid from any vessel to which any intake pipe **38** is connected into the pump.

The liquid thus drawn into pump **13** by each of intake pipes **38** accumulates in the interior of lower section **24** of pump housing **14** and then rises up peripherally to overflow partition **44** which separates lower section **24** from upper section **23**. When the overflow liquid enters upper section **23** the tangential force exerted on the liquid by vanes **47** of rotating impeller **30** forces the liquid out of the upper part of pump **13** through discharge port **64**, as shown in FIG. 4. The air taken in leaves through vent holes **50**.

If the pump is operated without any liquid intake the working liquid tends to escape. The stepped lower surface of partition **44** helps retain the liquid which can return through holes **57**.

The pump of this invention is highly flexible since it can operate effectively and simultaneously on many separate sources from which fluid is to be drawn and then discharged as a combined stream. The embodiment shown in FIGS. 1 to 9, inclusive, operates, for example, with twelve intake ports on two levels.

Increased capacity can be readily achieved by providing additional intake ports at each level or provided additional levels by increasing the number of plates which go to form lower impeller **31**.

A more simplified embodiment of the pump of this invention is shown in FIGS. 10, 11 and 12.

Drive motor **10** is mounted on cover plate **19** of pump housing **14** which is divided into an upper chamber **42** and a lower chamber **43** by means of circular partition **44**. Motor drive shaft **33** passes through cover plate **19** and supports an assembly consisting of upper impeller **30** and lower impeller **31*a*** fixed to said shaft **33** by means

of a set screw **67**, for example. As previously described upper impeller **30** is provided with depending vanes **47**. Lower impeller **31***a* while functioning in the same manner as impeller **31** previously described is, however, constructed somewhat differently.

Lower impeller **31***a* comprises a web portion **68** provided with depending vertical vanes **69** each of which is formed with an outwardly facing slot **70** so positioned that on rotation vanes **69** will clear intake pipes **38** as shown in FIGS. 11 and 12.

The operation of this pump is carried out similarly to the embodiment described above. The pump is first primed with water or other fluid which can be introduced conveniently through discharge port **63**, for example. Intake pipes **38** are then connected up by means of suitable tubing (not shown) to the several vessels from which fluid is to be withdrawn. Motor **10** is then started up and when shaft **33** rotates both upper impeller **30** and lower impeller **31***a* also rotate. As previously described, lower impeller **31***a* causes the liquid in lower chamber **43** to rise up on the sides due to centrifugal force. The velocity of the fast moving liquid as it moves past intake pipes **38** lowers the pressure in said pipes and the partial vacuum formed draws any liquid under this partial vacuum through intake pipes **38** and into lower chamber **43**. As the level of liquid in lower chamber **43** rises, it then passes upward through holes **71** in web **68** of impeller **31***a* and through annular space **72** and overflows partition **44** to enter upper chamber **30**. Rotating impellers **47** then pick up the fluid and, as shown in FIG. 11, the fluid is ejected from discharge port **63** under relatively high velocity. Any air drawn into pump **13** can leave through air vents **50** and through the narrow space **73** which forms the clearance between shaft **33** and cover plate **19**.

It is understood that the foregoing detailed description is given merely by way of illustration and that many variations may be made therein without departing from the spirit of my invention.

Having described my invention, what I desire to secure by Letters Patent is:

1. A rotary pump for pumping liquids comprising a circular first chamber adapted to contain a body of liquid, means for setting said body of liquid into rotational motion whereby the centrifugal force on the rotating body of liquid causes it to form a rotating layer against said first chamber wall, an intake pipe connected to a liquid source extending into said first chamber with its open end terminating at a point within the rotating body of liquid and a concentric annular overflow partition for discharging any excess of liquid drawn through said intake pipe into said chamber so as to maintain a substantially constant volume of liquid within said first chamber.

2. A rotary pump in accordance with claim **1** wherein rotatably mounted impeller means are provided for setting said body of liquid into rotational motion.

3. A rotary pump for pumping liquids comprising a circular first chamber adapted to contain a body of liquid, rotatably mounted impeller means for setting said body of liquid into rotational motion whereby the centrifugal force on the rotating body of liquid causes it to form a rotating layer against said first chamber wall, at least one intake pipe connected to a liquid source extending into said first chamber with its open end terminating at a point within the rotating body of liquid and overflow partition means concentric with said first chamber for discharging excess liquid from said first chamber into a second chamber, rotatably mounted impeller means in said second chamber and a discharge port communicating with said second chamber through which the rotating impeller means discharges the liquid overflowing into said second chamber.

4. A rotary pump according to claim **3** wherein said first chamber contains a plurality of superimposed impeller means and each intake pipe provided is positioned between said superimposed impeller means.

5. A rotary pump according to claim **3** wherein the rotatably mounted impeller means is slotted to clear the intake pipe where it projects into said first chamber.

References Cited

UNITED STATES PATENTS

3,196,799	7/1965	Loss	103—107
2,276,824	3/1942	Corruthers.	
2,985,108	5/1961	Stoner et al.	

FOREIGN PATENTS

272,288	3/1914	Germany.
700,100	12/1940	Germany.
838,859	5/1952	Germany.

HENRY F. RADUAZO, *Primary Examiner.*

U.S. Cl. X.R.

103—84, 105