April 1, 1969 L. A. COURTER 3,436,084

PACKER FOR WELL TREATMENT

Filed Jan. 10, 1966

Sheet 1 of 2

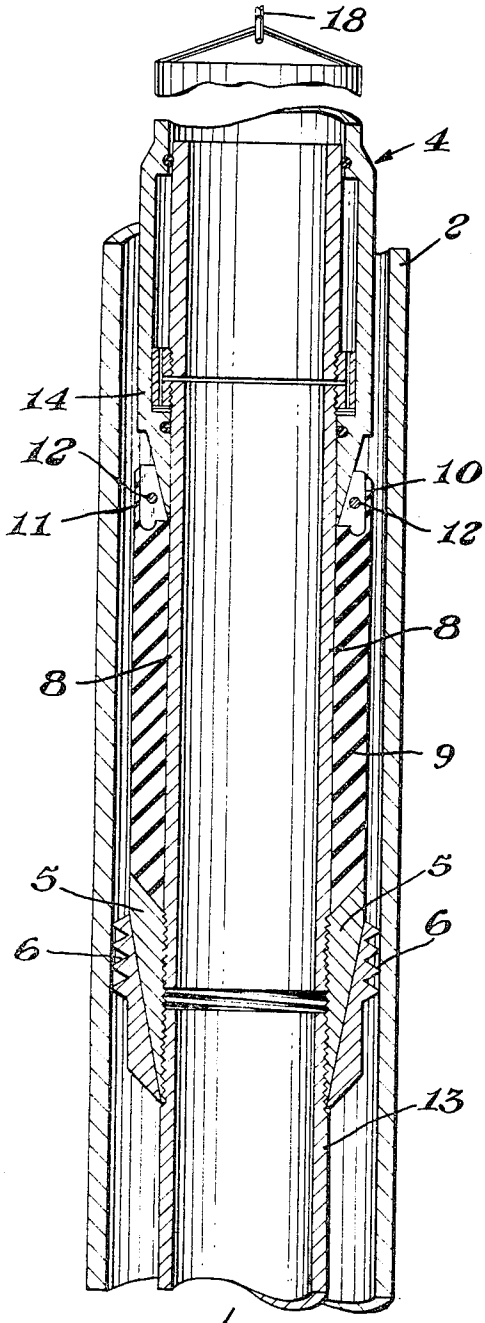

Fig. 1

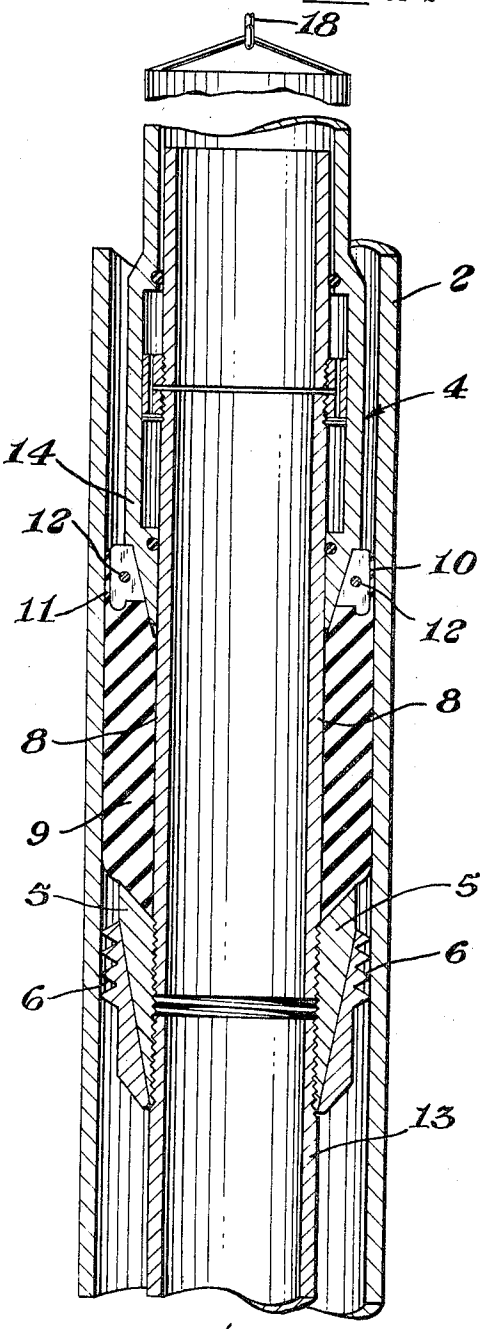

Fig. 2

INVENTOR.
Leo A. Courter

BY

C. U. Catlin
ATTORNEY

PACKER FOR WELL TREATMENT

Filed Jan. 10, 1966

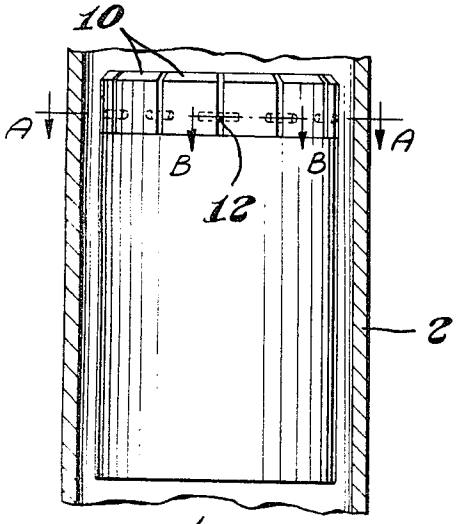

Fig. 3

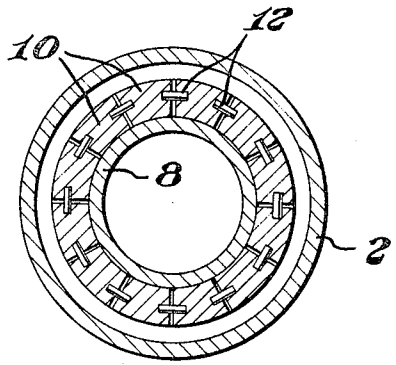

Fig. 4

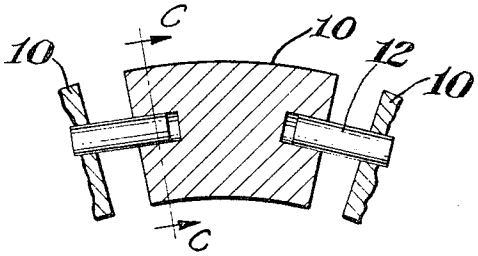

Fig. 6

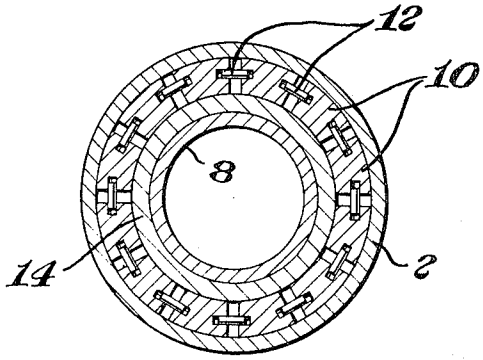

Fig. 5

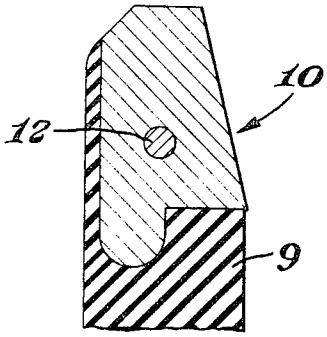

Fig. 7

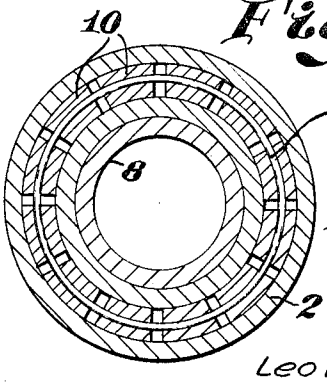

Fig. 8

INVENTOR.
Leo A. Courter

BY

C. W. Carlin
ATTORNEY

United States Patent Office

3,436,084

Patented Apr. 1, 1969

1

3,436,084
PACKER FOR WELL TREATMENT

Leo A. Courter, Oklahoma City, Okla., assignor to The Dow Chemical Company, Midland, Mich., a corporation of Delaware

Filed Jan. 10, 1966, Ser. No. 519,588
Int. Cl. F16j 15/04, 15/56, 33/03
U.S. Cl. 277—116.2 7 Claims

ABSTRACT OF THE DISCLOSURE

An improved packer, for controlling fluid-flow in a pipe, having an outwardly expanding deformable substantially cylindrical packing element wherein said element is reinforced and inhibited from undesirable longitudinal movement (sometimes called creeping or flow) when subjected to pressure differential by having arcuate segments provided by a series of vertical cuts along a circumferential edge, plates molded into the vertical mating end faces of each arcuate segment, said faces of each segment having either horizontal taps therein or channels drilled therethrough and either a series of slideable pins or a stretchable strand positioned in said taps or through said channel, respectively.

The invention concerns an improved packer.

A packer is a type of device or apparatus widely used in wells penetrating subsurface geological formations for the purpose of closing off the wellbore or at least a portion thereof by segregating a given level or interval. A packer is required to be manipulative, and to permit insertion into a wellbore to the desired level and thereafter to be closed to provide a tight seal against fluid flow or to be opened as desired to permit flow and usually thereafter to permit removal from the wellbore.

Due to the specific nature of the function of a packer it must be durable and adaptable to being placed in position and remaining there without leaking even when subjected to high pressure differential.

The design and the general nature of a packer may be obtained from text books concerned with well drilling, operation, and reworking. Patents, e.g., U.S. Patent 2,567,-321 of which applicant is an inventor, or catalogues, e.g., "Composite Catalogue of Oil Field Equipment and Service" or "Baker Catalogue for 1960" contain general information on packers presently in use.

A packer is usually lowered and controlled by means of a suspending pipe, tubing, or section to which it is threaded at the lower end or by a suspending wire line or cable. A packer is provided with a laterally movable element having outwardly extending teeth or dogs for engagement with the inner wall of the casing when the packer has been located at the desired level.

In order to provide a fluid-tight seal in the annulus between a casing and tubing of a wellbore, a deformable rubber cylindrical packer element is usually employed which is relaxed when the packer is open but which, when the packer is to be closed, is forced axially outwardly, completely closing off the annulus. When the entire wellbore is to be closed off, a centrally positioned plugging member is employed instead of the open tubing. Pressure to force the packer element outwardly is usually provided by engagement of the suspending tubing section with a slideable downwardly tapered cylindrical sleeve which may be forced between the tubing or cylindrical plug and the packer element as the tapered sleeve moves downwardly.

When the tapered sleeve is moved downward, as by the release of the weight of tubing above, or by turning the tubing, or by lifting on the tubing, dependent upon

2

the particular structure of the packer, or by operation through an electrically conductive wire line supporting the packer, the rubber cylindrical packer element is forced or caused to move outward, closing off the annulus.

A difficulty accompanying the use of a conventional packer has been the failure of the rubber packer element to resist high pressure differential (as that of a fracturing fluid subjected to high pressure between a pair of packers or below a single packer). This failure has been largely due to the tendency of the rubber material employed in packer elements to creep or move (often referred to as flow) in the direction of the lesser pressure.

The invention is an improved packer element and a packer employing such element which provides a means for substantially eliminating the flow of a packer element under pressure. It comprises a series of arcuate segments along one circumferential edge of the deformable packing element made by spaced vertical cuts; the segments are horizontally tapped or drilled; metal or hard tough resin face plates, known as tabs, having more or less centrally located holes therein are molded onto the mating vertical end faces of the segments and are aligned with the taps or drilled channel, whichever is used; either connecting reinforcing slideable pins are forced into mating taps or a continuous stretachable strand of high strength is drawn through the drilled channels in the segments so that, in either case when the packing element is forced outwardly, the pins or strand reinforce the packing element and prevent it from being moved or caused to flow longitudinally under pressure. The details of the improved packer element and packer will be better understood by reference to the attached drawing wherein:

FIGURES 1 and 2 are diagrammatic elevational views with parts cut away to show structure, wherein FIGURE 1 shows the packer element in a relaxed state (i.e., the packer is open to fluid flow) and FIGURE 2 shows the packer element forced against the inner casing wall (i.e., the packer is closed to fluid flow). In FIGURES 1 and 2, force for actuating the closing mechanism of the packer, including both the teeth-like metal projections for engaging the inner wall of a casing to hold the packer at the desired level and the deformable material for sealing against fluid flow, is provided by a piston (not shown) operated by the gas generated from a slow-burning charge of chemical. It is contemplated that the packer shown in FIGURES 1 and 2 would be lowered into position and subsequently raised by means of a supporting wire line. The wire line contains an electrically insulated conductor circuit (not shown) to ignite the slow-burning gas-generating charge.

Instead of employing the electrically conducting supporting wire line and gas-releasing means actuated thereby, the packer shown in FIGURES 1 and 2 may be supported by a threaded pipe section which, when rotated, actuates the packer element therein as desired.

FIGURE 3 is an elevational view of the packer element with parts cut away, showing metal reinforcing tabs molded in notched-out segments of the upper circumferential edge of the packer element.

FIGURES 4 and 5 are sectional views taken along line A—A of FIGURE 3, positioned in a casing wherein FIGURE 4 shows the packer element in a relaxed state existing when the packer is opened to fluid flow and wherein FIGURE 5 shows the packer element in a transversely expanded or thickened state and pressed against the interior of a casing when the packer is closed to fluid flow.

FIGURE 6 shows an enlarged sectional view of one of the arcuate shaped metal tabs and supporting pins molded to one of the segments comprising the packer element taken along line B—B of FIGURE 3.

FIGURE 7 is a sectional view of one of the metal tabs

molded into segments of element **9** taken along line C—C of FIGURE 6.

In more detail, FIGURES 1 and 2 of the drawing (wherein similar numbers indicate like parts) numeral **2** denotes a well casing into which the packer, to which reference is made generally by numeral **4**, has been lowered. In packer **4** there are shown grip slips, one of which is identified by numeral **5** which actuate (e.g., either by gas generated by a chemical ignited by electric spark or by rotation of a suspending pipe) cause hookwall mechanism **6**, as desired, to press firmly into the surface of the inner wall of casing **2** to hold packer **4** at the desired level; tube-shaped housing member **8** which provides an integrated packer structure to house the packer setting mechanism (not shown) and to which slips **5** are attached; deformable cylindrical packer element **9** having a series of segments vertically cut into the upper edge thereof and tabs **10** made by molding metal or resin pieces to the notched-out segments **11**, collectively forming the upper circumferential edge thereof and each of which tab-reinforced segment is tapped in each end into which are inserted horizontally slidable reinforcing pins **12**; pipe segment **13** threaded to housing member **8**; vertically slidable cone-shaped slip **14** which when lowered, compresses packer element **9** vertically and forces it outwardly into contact with casing **2**; and electrically conducting, wire-supporting line **18**.

FIGURE 3 is an interior view of a portion of packer element **9** in a slightly transversely expanded or stressed state showing some of tabs **10** consisting of metal inserts molded into segments about the upper edge of element **9** and the exposed portions of pins **12**. There is also shown mating opposed taps and pins positioned in adjacent tabs by dotted lines. All taps and pins are substantially identical in structure.

FIGURES 4 and 5 show horizontal cross-sections taken along line A—A of FIGURE 5 showing casing **2**, tabs **10** with reinforcing pins **12** therein and housing member **8**. FIGURE 4 shows the packer open whereas FIGURE 5 shows the packer element closed to fluid flow.

FIGURE 6 shows an enlarged horizontal sectional view of one arcuate shaped tab **10** with horizontal pins **12** positioned in taps located in each end thereof, taken along line B—B of FIGURE 3.

FIGURE 7 is a vertical cross-section of the metal or hard resin (e.g., nylon) tab **10** molded into a segment of element **9** and containing pin **12** taken along line C—C of FIGURE 6.

FIGURE 8 is a horizontal cross-section similar to FIGURE 5 but differs therefrom by having the taps appearing in FIGURE 5 replaced by drilled channels which extend horizontally through each successive segment **10** and by having the series of pins **12** of FIGURE 5 replaced by a continuous strand of stretchable resin **14**, e.g., nylon.

The taps and pins therein may be straight (as shown) or may be arcuate shaped, corresponding to the arc of the segments. Instead of taps, a continuous hole, extending entirely through each segment, may be used wherein, instead of a series of pins, a continuous stretchable high strength strand is run through the holes. However, steel pins, positioned in arcuate shaped taps which do not extend all the way through the segments, are preferred.

It is understood that the packer element as shown in FIGURE 3 may have segments cut in both the upper and lower circumferential edge into which are molded reinforcing tabs **10**.

To make the improved packer of the invention, the general procedure followed may be that of making conventional packers except that the segments are cut or notched in the top and/or bottom circumferential edge or edges of the deformable cylindrical packer element and into each segment is molded a metal or hard durable resin tab provided with taps in each end for the insertion of pins or provided with a continuous hole for use with a continuous stretchable strand for reinforcement. The

top edge of the deformable packer element is thus protected (1) against damage or undue strain due to the pressure of the wedge-shaped ram-shaped slip when the packer is closed and (2) against creep or flow of the rubber when subjected to high pressures.

When the packer is employed in a wellbore, it is either (1) supported by a wire line with suitable control means for engagement of the exterior of the packer with the inner wall of the casing to retain it at the desired level and an operating means for actuating the slip to force the deformable packer element into tight sealing contact with the casing wall or (2) is supported by a centrally located tubing or pipe threaded to the packer which provides manipulation of the packer by turning the tubing or connecting pipe.

To fracture a formation traversed by a cased wellbore, employing the packer of the invention, the packer provided with support and control means, as for example a more-or-less centrally positioned pipe or tubing is lowered into the wellbore, the packer closed, and thereafter fracturing fluid injected down the tubing and into the formation below the packer at fracturing pressures. The packer closing mechanism, illustrated by the slidable slip of the drawing, is thereafter forced downward thereby forcing the deformable packer element outwardly into tight sealing engagement with the inner wall of the casing. The metal or rigid resinous tabs, molded to the segments of the deformable packer element protect the element against damage and prevent creep of the deformable element under pressure.

Acidizing a formation, employing the packer of the invention, is similar to conventional acidizing except that, where a level is to be segregated as in acidizing at greater than fracturing pressures, the apparatus of the invention is employed substantially as described in the paragraph above.

In reworking a well, e.g., reperforating a casing at a different level and wherein old perforations are closed by means of the packer during the perforations of the casing at the new level, the packer is employed similarly as in fracturing as described in the paragraph above.

The packer of the invention is conveniently used in cementing operations wherein it is desirable that the wellbore be packed off to segregate the level at which cementing is desired to be done.

The packer offers the advantage of providing protection in well operations against pressure differential wherein the greater pressure is either above or below the packed off level or wherein the packed off level is at a different pressure than that existing immediately both above and below.

Having described my invention, what I claim and desire to protect by Letters Patent is:

1. In a packer for use in a well bore comprising a vertically generally cylindrically shaped packer element, a vertically slideable slip having a horizontal shoulder portion and a radially outer surface tapering radially inwardly from said shoulder portion, means to actuate said slip to force said element radially outwardly into sealing contact with the interior of a casing of the wellbore to close off fluid flow therein, and means for insertion of the packer down the well and positioning it therein at the desired level, to improved packer element consisting essentially of a pressure deformable cylindrical packer component having a series of arcuate segments cut vertically at spaced apart intervals about at least the upper circumferential edge of said packer component and into which segments are molded rigid tabs of high strength, said tabs having opposite vertical planar faces, a horizontal top face, a radially inner face tapering from said planar top face radially inward and a radial outer face substantially covered by said cylindrical packers component, each of said tabs having a hole extending inwardly substantially horizontally from both of said substantially vertical faces thereof and in substantial alignment with a mating hole in the opposing face of each adjacent tab and a substantially

horizontal member slidably positioned in said aligned holes which permits axial and radial movement of said packing component and tabs allowing said packer element to go into said sealing contact with said casing when said tapering outer surface and horizontal shoulder of said slip engage, respectively, said tapering inner surfaces and horizontal top faces of said tabs while reinforcing each tab by extending into and thereby interconnecting each tab with the tabs on each side thereof.

2. The deformable packer element of claim 1 wherein the tabs are made of metal.

3. The deformable packer element of claim 1 wherein the tabs are made of a hard resin.

4. The packer element of claim 3 wherein the tabs are made of nylon.

5. The deformable packer element of claim 1 wherein said tabs are arcuate shaped having an arc conforming substantially with the arc of the circumferential edge of said packer element.

6. The deformable packer element of claim 1 wherein said hole consists of two aligned mating taps and the reinforcing member consists of a series of pins slideably positioned in the taps at each face of each arcuate shaped tab.

7. The deformable packer element of claim 1 wherein

said hole passes entirely through each tab and said reinforcing member is a stretchable elastic strand of high strength which forms a continuous circle passing entirely through the hole in each arcuate tab circumferentially.

References Cited

UNITED STATES PATENTS

1,574,922	3/1926	Nelson	285—323 X
2,368,400	1/1945	Baker	166—140
2,368,928	2/1945	King	277—235 X
2,430,623	11/1947	Taylor et al.	166—138 X
2,609,258	9/1952	Taylor et al.	277—235 X
2,715,441	8/1955	Bouvier	166—127
2,874,436	2/1959	Allen	285—146 X
3,169,025	2/1965	Borah	277—235
3,303,885	2/1967	Kisling	166—135 X

CARL W. TOMLIN, *Primary Examiner.*

D. W. AROLA, *Assistant Examiner.*

U.S. Cl. X.R.

166—138; 285—338, 139