STRAND WRAPPING MACHINE

Filed May 20, 1965

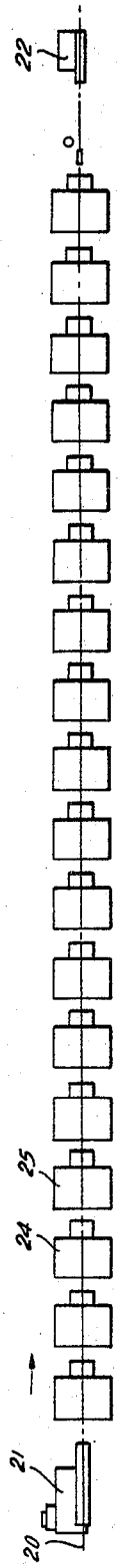

FIG. 1

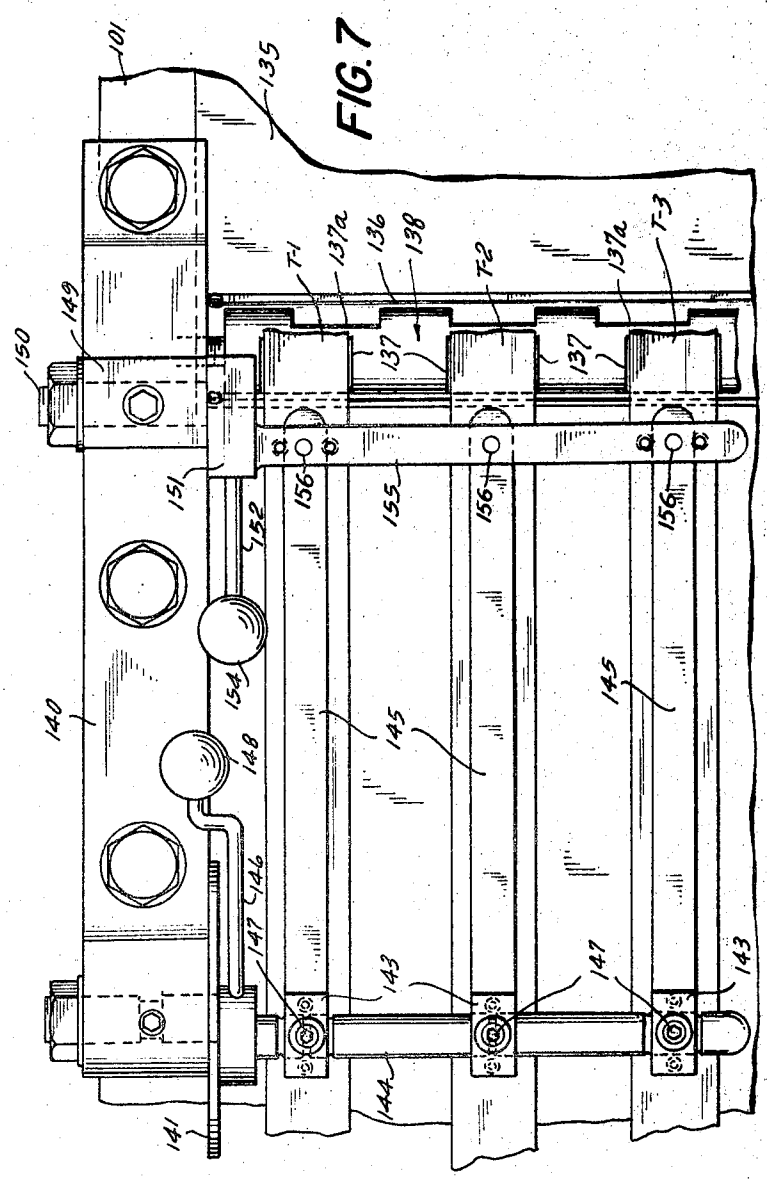

FIG. 7

INVENTOR
CHESTER R. SHEETS
BY Frank E. Robbins
ATTORNEY

STRAND WRAPPING MACHINE

Filed May 20, 1965

FIG.2

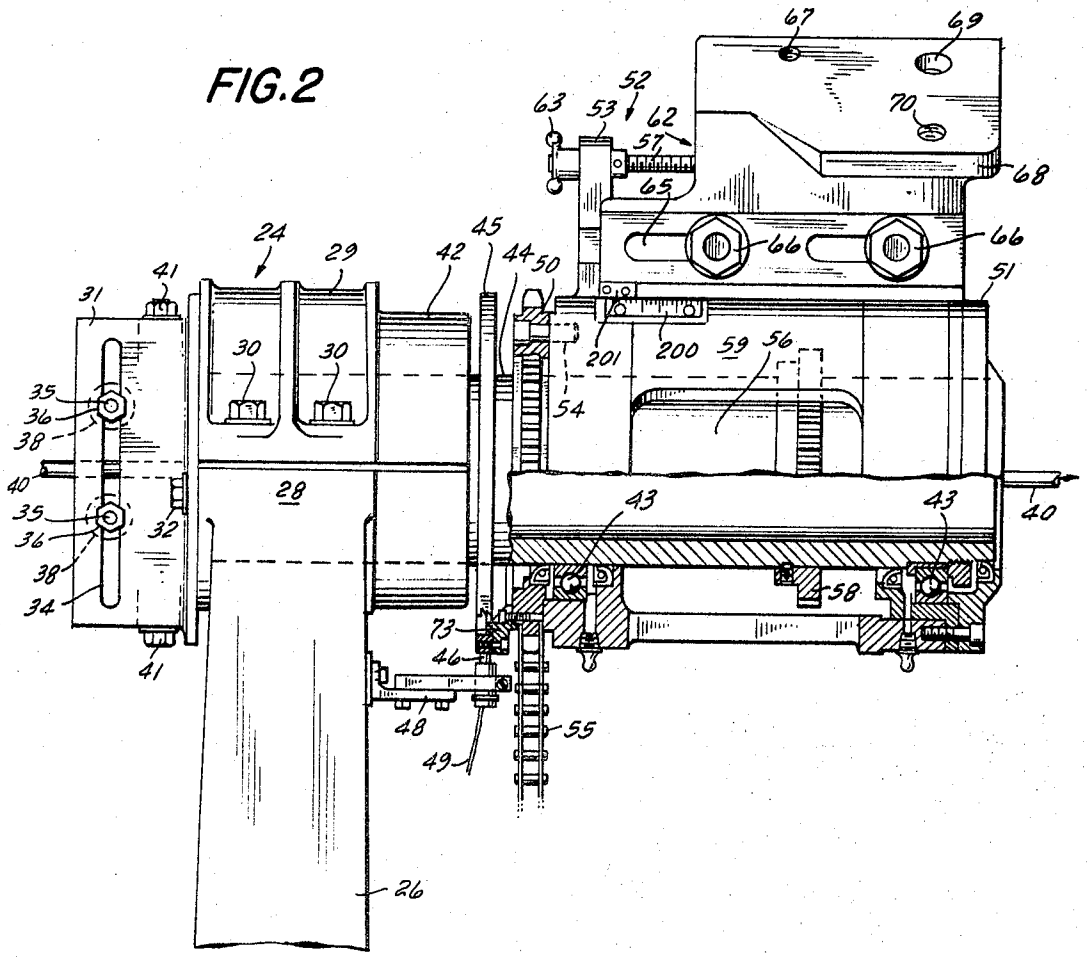

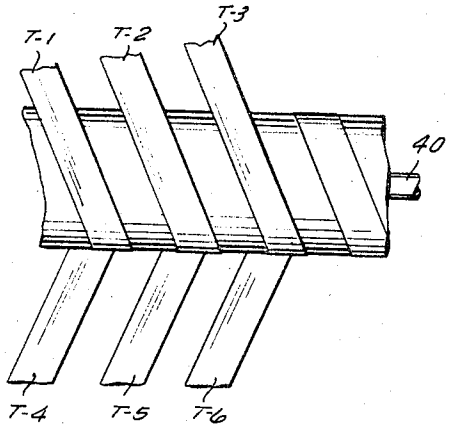

FIG.12

INVENTOR
CHESTER R. SHEETS
BY Frank E. Robbins
ATTORNEY

STRAND WRAPPING MACHINE

Filed May 20, 1965

FIG. 3

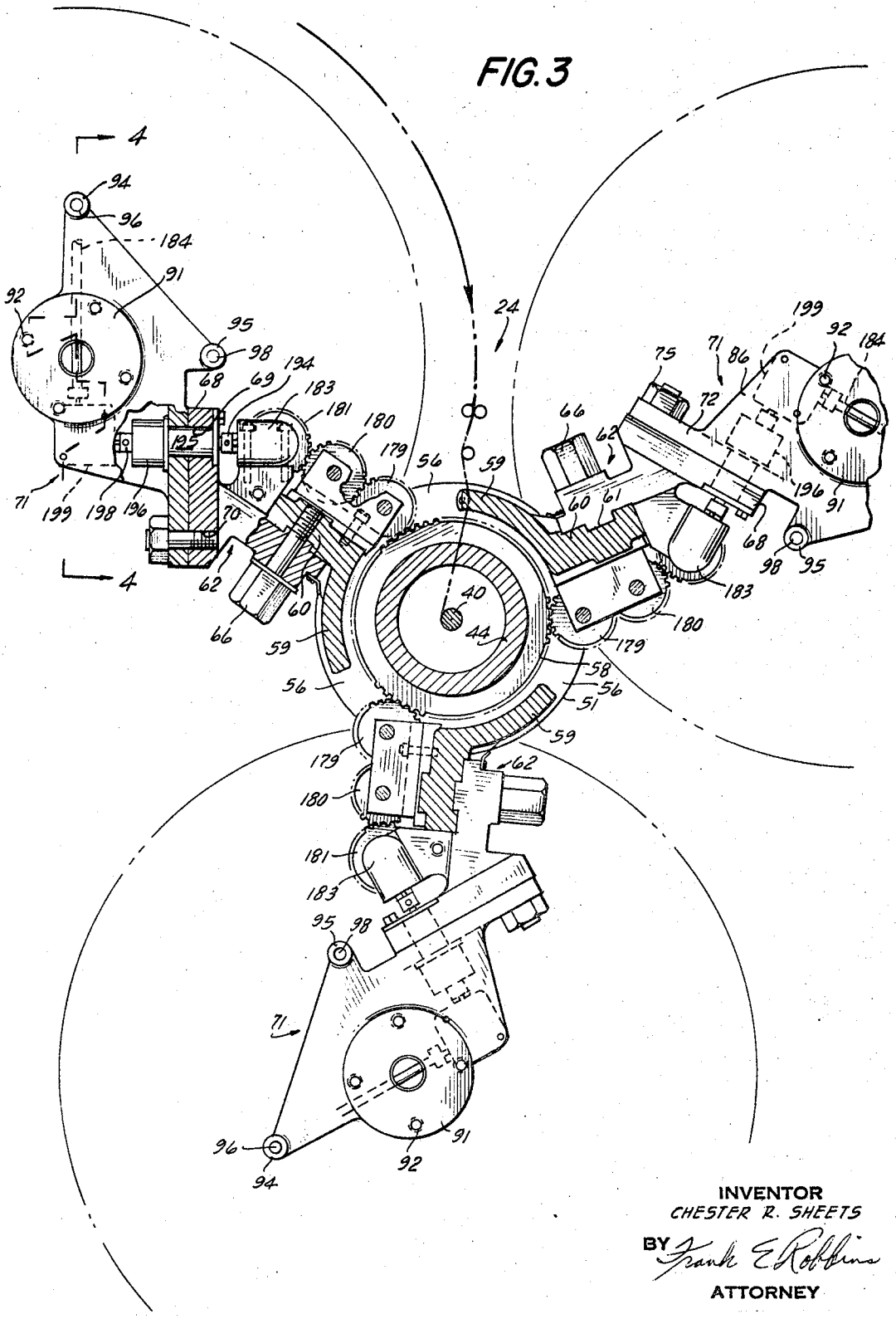

INVENTOR
CHESTER R. SHEETS
BY Frank E. Robbins
ATTORNEY

STRAND WRAPPING MACHINE

Filed May 20, 1965 Sheet 4 of 8

FIG. 4

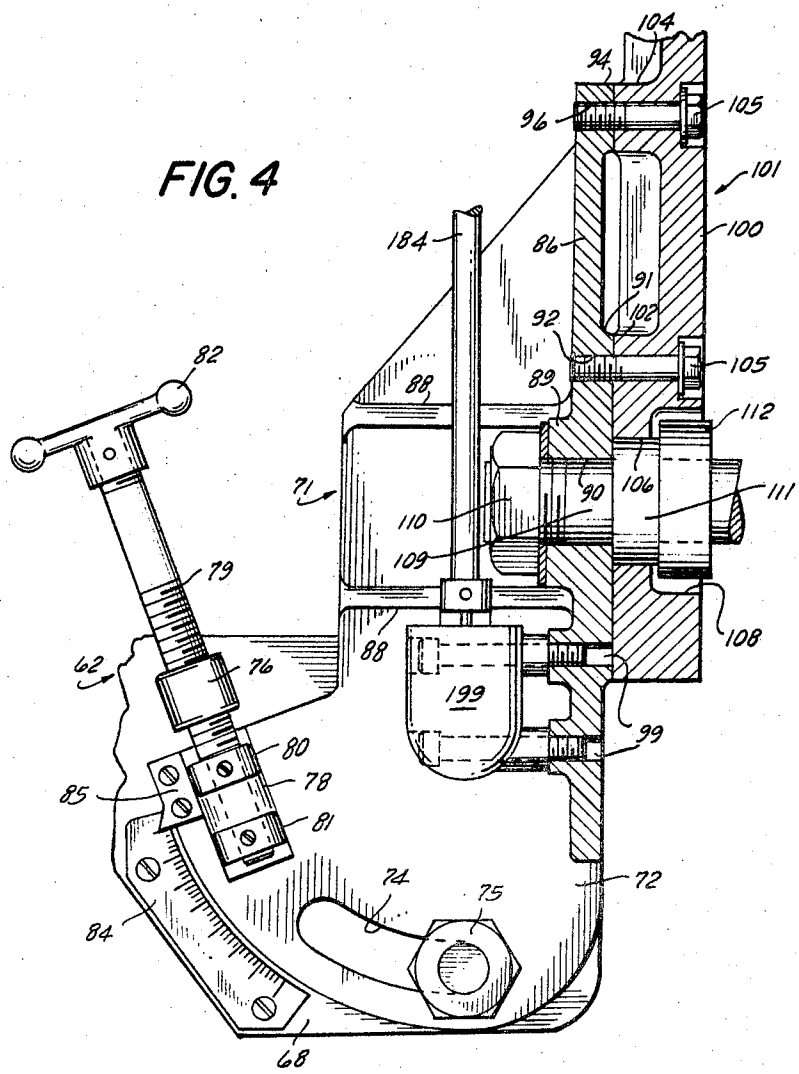

FIG. 10

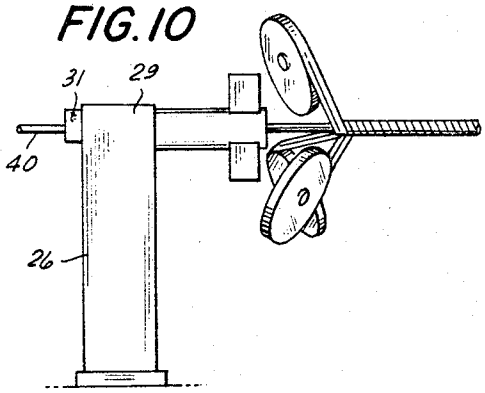

FIG. 11

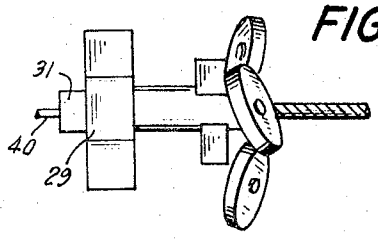

INVENTOR
CHESTER R. SHEETS
BY Frank E. Robbins
ATTORNEY

STRAND WRAPPING MACHINE

Filed May 20, 1965 Sheet 5 of 8

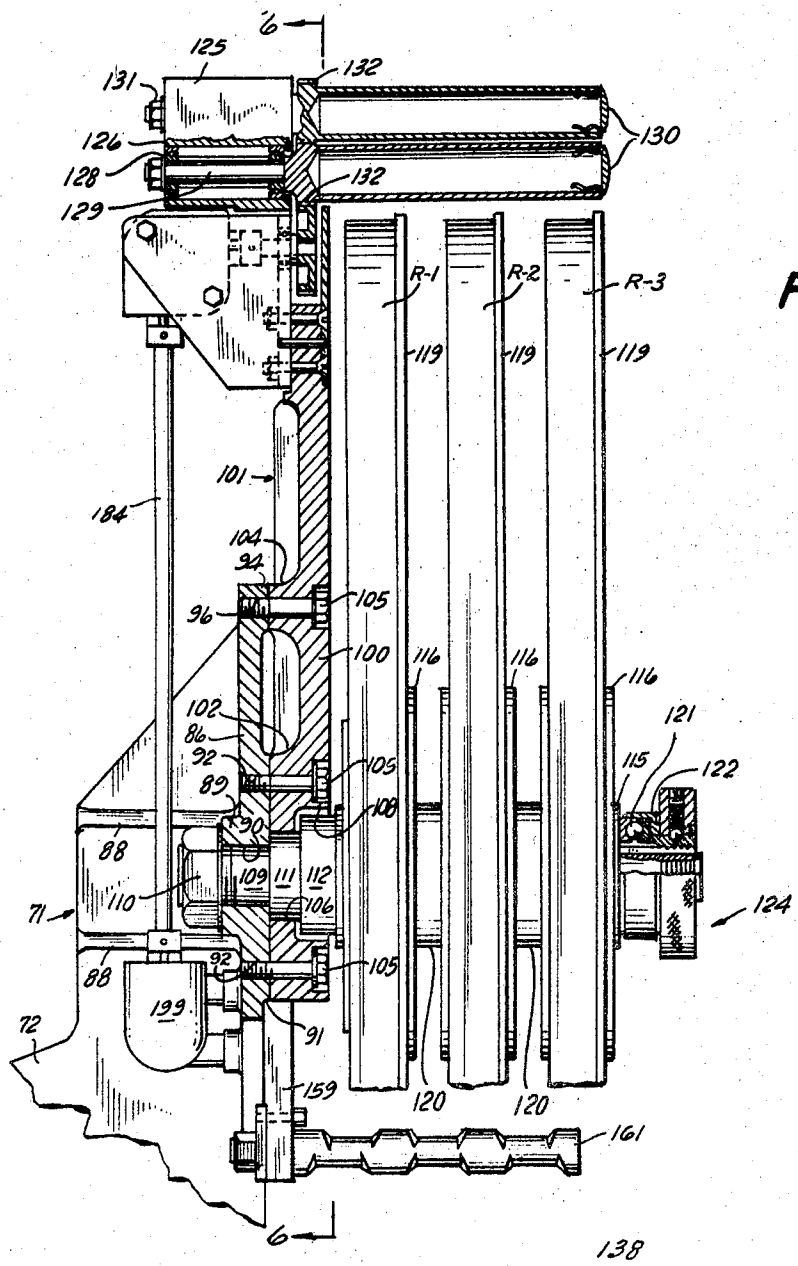

FIG. 5

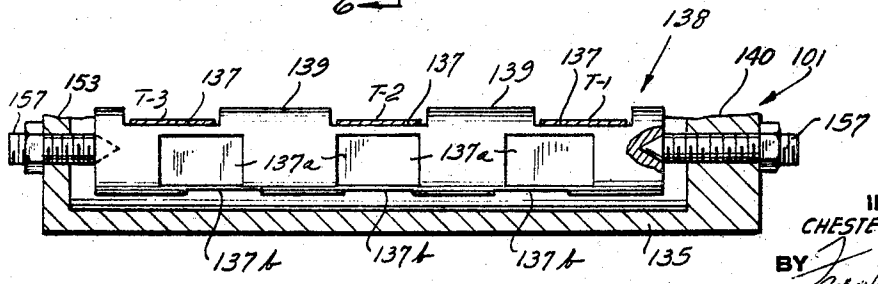

FIG. 13

INVENTOR
CHESTER R. SHEETS
BY Frank E. Robbins
ATTORNEY

STRAND WRAPPING MACHINE

Filed May 20, 1965 Sheet 6 of 8

FIG. 6

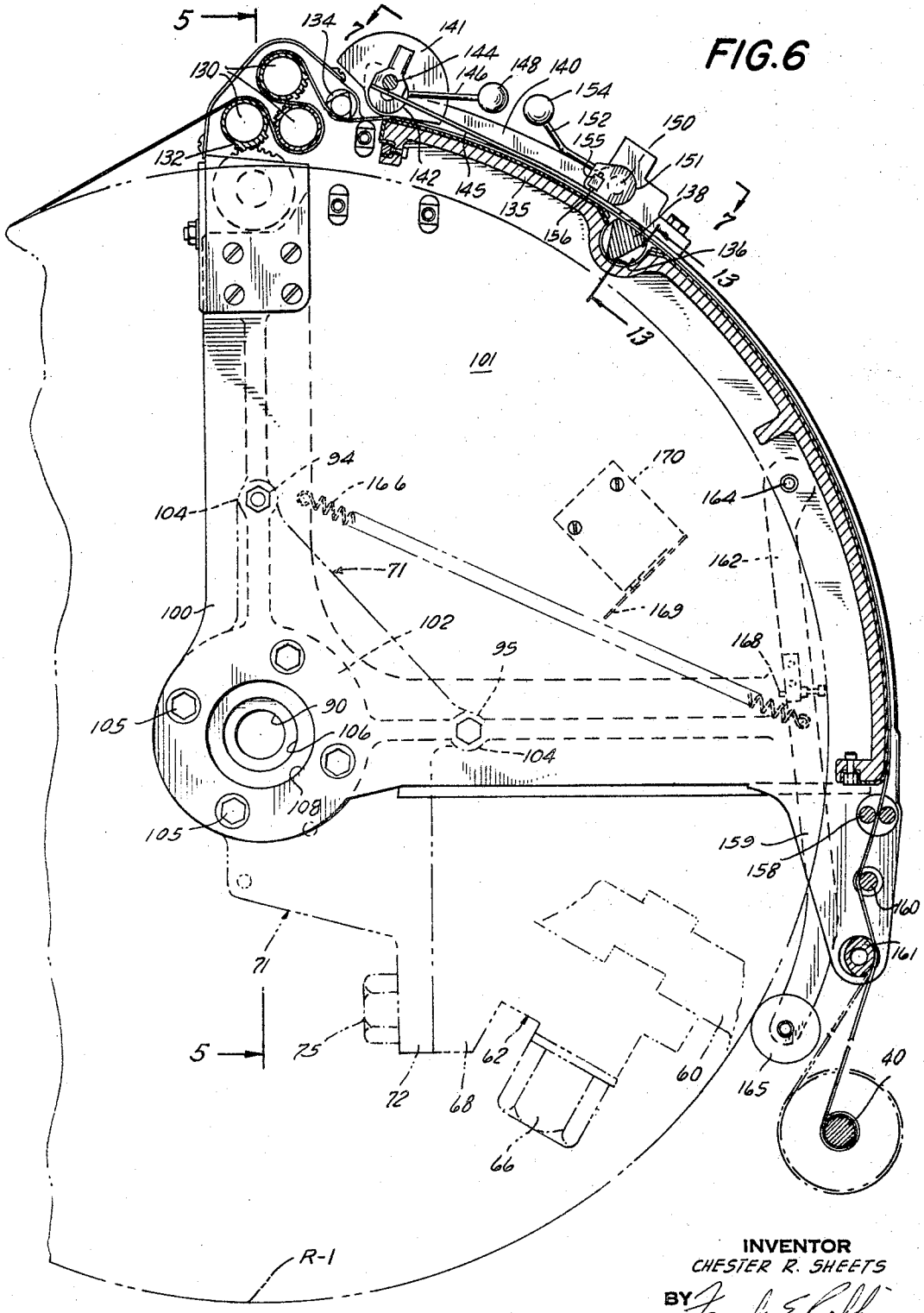

INVENTOR
CHESTER R. SHEETS
BY Frank E. Robbins
ATTORNEY

STRAND WRAPPING MACHINE

Filed May 20, 1965

FIG. 8

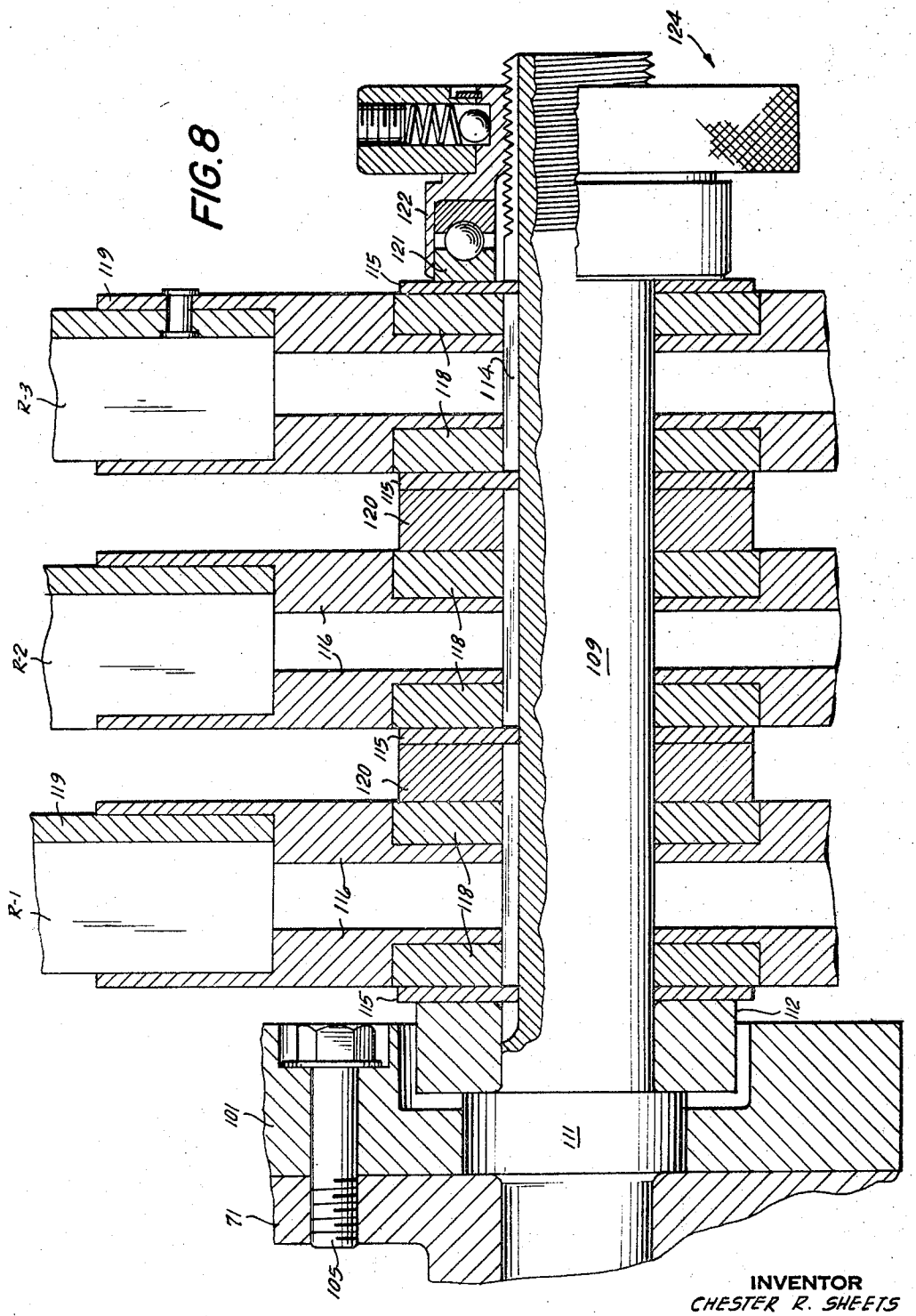

INVENTOR
CHESTER R. SHEETS
BY Frank E. Robbins
ATTORNEY

STRAND WRAPPING MACHINE

Filed May 20, 1965 Sheet 8 of 8

FIG. 9

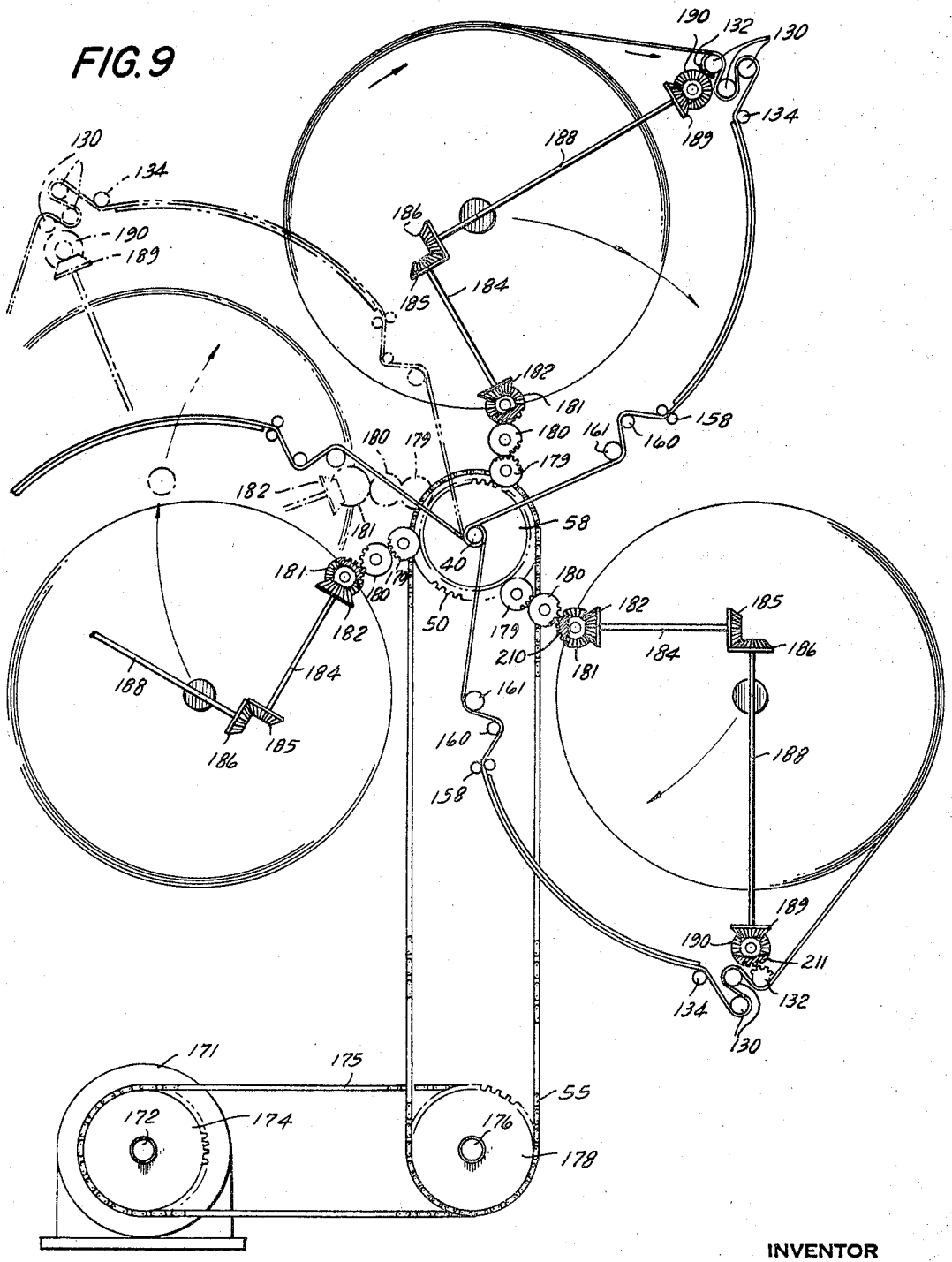

INVENTOR
CHESTER R. SHEETS
BY Frank E. Robbins
ATTORNEY

United States Patent Office

3,435,602

Patented Apr. 1, 1969

1

3,435,602
STRAND WRAPPING MACHINE

Chester R. Sheets, East Paterson, N.J., assignor, by mesne assignments, to the Okonite Company, Passaic, N.J., a corporation of Delaware

Filed May 20, 1965, Ser. No. 457,303
Int. Cl. D02g 3/36
U.S. Cl. 57—15 20 Claims

ABSTRACT OF THE DISCLOSURE

Method and apparatus for helically wrapping an axially moving strand by orbiting a plurality of covering tape spools about said strand while each tape is withdrawn from its spool by a capstan driven at least as fast as the tape is applied to the strand so as to deliver the tape to a point substantially free of tension so that a tensioning means can subsequently apply the desired tension to the tape free of varying condition at the supply spool.

This invention relates to apparatus and methods for the application of a tape or tapes to an elongate strand. More particularly, the invention relates to apparatus and methods for winding a plurality of tapes in helical fashion about an electrical conductor, as, for example, in the manufacture of paper-insulated, high-voltage electrical cable.

In the manufacture of such cable, it is a common practice to advance the cable lengthwise along a path. A plurality of taping heads are disposed successively along the path, and a plurality of tapes are applied, by winding them about the conductor, at each of the taping heads. The tapes may be of the same material, such as paper, or of different materials. For example, paper, plastic, metallized plastic, and metal tapes may be applied where needed to meet a particular cable specification. Accordingly, it should be understood that when paper tape is referred to herein, it is not intended to exclude the use of tapes of other materials.

It has long been recognized that it is desirable, in the manufacture of paper-insulated, high-voltage electrical cable, to apply the paper tapes with uniform tension, and with accurate overlay and gap spacing. The term "overlay" refers to the amount of displacement of a paper tape with respect to the preceding tape lying directly beneath it. The term "gap spacing" refers to the distance between adjacent tape windings that are not overlaid.

The tension used for a particular tape, that is wound about a cable, may or may not be the same as the tension used in a preceding or following tape that is wound about the same cable. The selection of the correct tension for each tape is made on the basis of long experience and manufacturing know-how. After a particular tension has been selected for a tape, the selected tension should be maintained at a substantially constant value.

One of the problems that has been encountered in manufacturing operations, of the type to which the present invention pertains, is that the tension, at which the tape from a particular tape supply reel is applied, may vary as the diameter of the tape supply on the reel varies. Although various mechanical techniques have been proposed for solving the problem of providing for a constant tension value in a given tape, none of these has been completely satisfactory, Partly as a result, relatively small supply reels of paper are employed, so that the effects of changes in diameter are less marked. As a result, a substantial and often major part of the life of a taping machine is spent in "down" time to permit the replacement of tape supply reels. Since a taping machine is a

2

major capital investment, the proportion of down time is highly significant as a cost factor.

Another manufacturing problem is that it is extremely difficult, and in most cases impossible, to obtain synchronism between the operations of successive taping heads on a single taping machine. Consequently, it has been a common practice to treat each taping head as a unit, performing an isolated, unitary operation, rather than as a part of a large machine that performs several coordinated steps.

One object of the present invention is to provide apparatus and methods for the application of tape to an elongate strand at a selected, essentially constant tension value.

Another object of the invention is to provide efficient apparatus and methods for the application of tapes to elongate strands, such as, for example, the application of paper and other tapes in helical windings about an electrical conductor.

A more specific object of the invention is to provide practical, efficient apparatus and methods for winding tapes about electrical conductors for the manufacture of insulated cable, with improved control over tape tension, overlay, and gap spacing.

Still another object of the invention is to provide an efficient, multiple-head taping machine in which the several heads can be operated in a coordinated and synchronized fashion.

Other objects of the invention will be apparent hereinafter from the specification and from the recital of the appended claims.

In the drawings:

FIG. 1 is a diagrammatic plan view of a taping machine that is constructed in accordance with, and that operates in accordance with, one preferred embodiment of the present invention;

FIG. 2 is a fragmentary part side elevation, part section, partly broken away, and on an enlarged scale, of a single taping head, with the drum support bracket and drum sector removed, better to show the construction of the head;

FIG. 3 is a fragmentary part section, part front elevation of a taping head, with the drum sectors removed, showing the location of the tape supply reels in phantom;

FIG. 4 is a fragmentary section on an enlarged scale, taken on the line 4—4 of FIG. 3, looking in the direction of the arrows, with a fragmentary section of the drum sector added;

FIG. 5 is a fragmentary part elevation, part section, on a smaller scale, of a single drum sector that is loaded with tape supply reels, taken on the line 5—5 of FIG. 6, looking in the direction of the arrows, with the cylindrical shoe section of the drum sector omitted for ease and clarity of illustration;

FIG. 6 is a fragmentary section taken on the line 6—6 of FIG. 5, looking in the direction of the arrows, with a tape supply reel shown in phantom;

FIG. 7 is a fragmentary view, on an enlarged scale, taken on the line 7—7 of FIG. 6, looking in the direction of the arrows;

FIG. 8 is a fragmentary axial section, on an enlarged scale, showing the manner in which the tape supply reels are mounted on their shaft;

FIG. 9 is a schematic diagram illustrating the operation of a single taping head, in a machine that is constructed in accordance with one preferred embodiment of the present invention, showing three tape supply reels (or banks of supply reels) mounted on the head, the direction of rotary movement of the tape reels about the conductor being indicated by the direction of the arrows, and also showing, in phantom, a second position for one

of the supply reels through which it would move during operation;

FIG. 10 is a fragmentary imaginative side elevation, on a small scale, showing a plurality of paper supply reels and their respective orientations relative to the conductor to which the tapes are being applied;

FIG. 11 is a top plan view of FIG. 10;

FIG. 1 is a fragmentary elevation, on an enlarged scale, of a section of tape-wrapped conductor, with a short length of the bare conductor extended at one end, to show the thickness of the applied tape wrappings, and with some of the tape windings shown in their respective application positions; and

FIG. 13 is a section, on an enlarged scale, taken on the line **13—13** of FIG. 6, looking in the direction of the arrows.

Referring now in detail to the drawings, and particularly to FIG. 1, the numeral **20** denotes the center line of the taping machine, and also the path that the conductor will follow as it is advanced through the taping machine. A tensioning device **21** is disposed at the input or back end of the taping machine, and a second tensioning and advancing device **22** is disposed at the output or front end of the machine. These two devices **21**, **22** advance the cable at selected rates of advancement through the taping machine, and maintain it at a desired degree of tautness.

In the working path through which the conductor is advanced, between these two tensioning devices **21**, **22**, there are a plurality of work stations, at each of which one or more tapes can be applied to the conductor. Two of the devices for applying tape about the conductor, hereafter referred to as taping heads, in accordance with the present invention, are identified in FIG. 1 by the numerals **24** and **25**, respectively.

The taping heads, that are illustrated in the drawings, are each provided with means for applying nine separate tapes about a conductor from three different, angularly spaced supply locations on each head. However, not all of these supply locations need be used; and more than the number shown can be used, if desired, by appropriate modifications to the head.

Referring now particularly to FIG. 2, each of the taping heads is substantially the same in its construction and mode of operation as the illustrated taping head **24**. An A-frame **26** provides the supporting structure for each taping head **24**. The upper end of each A-frame is formed as a clamp, with a lower portion **28** and an upper portion **29**, that are removably secured together by bolts **30**. These upper and lower portions **29** and **28**, respectively, are so formed as to provide, therebetween, as assembled, a generally cylindrical bore.

A box-like frame **31** is detachably secured to the rear face of the cylindrical segment **28** of the A-frame, by a plurality of bolts **32**. This frame **31** is formed with a pair of elongate slots **34**, only one of which can be seen in FIG. 2, within which a pair of roller axles **35** can be adjustably positioned by nuts **36**. A pair of rollers **38** are freely rotatably mounted on the axles **35**, for guiding the conductor **40** through the working path between the back and front tensioning devices **21** and **22**, respectively. The rollers **38** are mounted for rotation about horizontal axes. A similar pair of rollers (not shown) are mounted in the frame **31**, adjustably secured in place by the nuts **41**, for rotation about vertical axes, for additional guidance of the conductor.

The upper and lower portions **29** and **28** of the A-frame **26** are formed, at their front ends, with forwardly projecting parts that assemble as a cylindrical collar **42**. A large-diameter tubular shaft **44** is immovably clamped within the bore formed between the upper and lower portions **29**, **28** of the A-frame and of the collar **42**.

The spider

A rotary structure generally referred to as a spider is mounted upon a generally sleeve-like rotary housing **51** which is mounted on the end of the shaft **44**. Ball bearings **43** are interposed between the shaft **44** and the housing **51**, at each end of the housing, to permit rotation of the housing about the shaft. A sprocket **50** is secured to one end face of the housing **51**, by a plurality of threaded fasteners **54**. A chain **55** is engaged about the sprocket, **50** for driving it, as will be described presently.

A slip ring **45** is mounted for rotation about the shaft, **44** in radially spaced relation to the shaft, and in axially spaced relation to the sprocket **50**. The slip ring **45** is secured to the sprocket, **50** for rotation upon rotation of the sprocket, by a plurality of securing brackets that are generally designated by the numeral **73**. A brush **46** is mounted on a bracket **48** that is secured to the front face of the A-frame **26**. This brush **46** is disposed for operative engagement with the slip ring **45**. A lead **49** is connected to the brush **46**, for a purpose to be described presently.

The housing **51** is formed with three central, angularly-spaced, similar openings **56**. A drive gear **58** is secured to the shaft **44** in position so that it is exposed and accessible through these three openings **56**, for a purpose to be described presently.

The three, symmetrically disposed openings **56** in the rotary housing **51** divide the housing into three, axially extending lands or segments **59**. The three openings **56** extend axially over a central portion of the rotary housing **51** only, so that at each end of the housing, there are a pair of generally cylindrical end portions. On the rear end portion of housing **51**, three blocks **53** are mounted in fixed, equiangularly spaced positions relative to the housing. Only one of these blocks **53** can be seen in FIG. 2. Each of these blocks **53** is formed with a threaded bore that extends through the block, lengthwise of the taping head **24**. A threaded stud **57** is engaged in this bore, for a purpose to be described presently. A handle **63** is secured to the rear end of this stud **57**.

With added reference to FIG. 3, each of the segments **59** is formed with a radially outwardly extending arm **60** that serves as a mounting bracket. Each mounting bracket **60** is formed with an axially-extending groove **61**. A slide **62** is mounted on the arm **60**, and is formed with a tongue that engages and that can slide in the groove **61**. The slide **62** is also formed with a pair of axially-extending slots **65**, and a pair of bolts **66** are disposed to project through these slots and thread into bores in the arms **60**, for adjustably securing each slide **62** on its respective arm.

A scale **200** is secured to the surface of the housing **51**, and a pointer **201** is secured to the lower edge of the slide **62**, for registry with the indicia on the scale **200**.

Each of the slides **62** is also formed at its outer end with an angled supporting shelf **68**. As is best shown in FIG. 2, this shelf **68** is formed, in its radially outwardly exposed face, with a threaded recess **67**, a large clearance hole **69**, and a threaded bore **70**, for purposes to be described presently.

A drum support bracket **71** (FIGS. 3 and 4) is mounted on the shelf **68** of each slide. **62**. Each of the three drum support brackets **71** is similarly constructed. Thus, each drum support bracket **71** is formed with a base portion **72** that seats on and is supported by the shelf **68**. The base portion **72** is formed with an arcuate slot **74** (FIG. 4), and a bolt **75** (FIGS. 3 and 4) projects through this slot and threads into the bore **70** of the shelf, to adjustably secure the bracket **71** on the shelf **68**.

Referring now particularly to FIG. 4, a block **76** is secured to the shelf **68** by a stud (not shown) that threads into the bore **67** in the shelf. The block **76** is secured to the stud in such fashion as to permit the block to rotate in a plane parallel to the shelf **68**. The block **76** is formed at its upper end with a transverse, threaded bore. A block **78** is rigidly secured to the upper face of the drum support bracket **72**, and it is formed with a smooth bore with which the threaded bore of the block **76** can be aligned. A heavy, threaded stud **79** is threaded through the bore of the block **76**, and is passed through the smooth bore of the block **78** on the

drum support bracket **72**. A handle **82** is secured to the free end of the stud **79**. A pair of rotary stop rings, **80** and **81**, respectively, are secured to the stud **79** on either side of the block **78**, to limit relative movement between the stud and this block. A scale **84** is secured to the surface of the shelf **68**, and a pointer **85** is secured to the surface of the drum support bracket **71**, for cooperative action and registration with the scale **84**.

The drum support bracket **71** is formed with an upstanding front web portion **86** that is braced by a pair of gussets **88**. The front web **86** is formed with an upstanding, rearwardly-facing boss **89**, and with a smooth bore **90** through this boss. The front web **86** of the drum support bracket **71** is also formed with a forwardly-projecting boss **91**, that has a substantially larger diameter than the rearwardly-projecting boss **89**, and that is generally concentric therewith. This web **86** is also formed with a plurality of threaded bores **92** (FIGS. 3, 4, and 5) in the boss **91**, and with a pair of smaller, triangularly-located bosses **94** and **95** (FIGS. 4 and 6) that are also formed with threaded bores **96** and **98**, respectively. In addition, as is best shown in FIG. 4, the web **86** is formed with a small pair of threaded bores **99**, for a purpose to be described presently.

The drum sector

Referring now particularly to FIGS. 4, 5, and 6, a radially-extending web portion **100** of a drum sector **101** is secured to the front web portion **86** of the drum support bracket **71**. The web portion **100** of the drum sector is formed with a plurality of boss portions **102**, **104** (FIG. 4) that contact the boss portions **91**, **94**, and **95**, respectively, of the drum support bracket **71**, and that are secured to the drum support bracket by a plurality of threaded fasteners **105**; the fasteners pass through smooth bores in the bosses of the drum sector **101** and thread into bores **92**, **96**, and **98** in the drum support bracket.

The web **100** of the drum sector **101** is formed with a bore **106** and a counter-bore **108**, both of which are coaxial with the bore **90** in the boss **89** of the drum support bracket **71**. One end of a shaft **109** is seated in the bore **90** of the drum support bracket **71**, and projects therethrough. A nut **110** is threaded on the end of the shaft **109**, to secure it firmly to the drum support bracket **71**. The shaft **109** is formed with an enlarged diameter portion **111** that provides a rear shoulder that bears against the front face of the boss **91** of the drum support bracket, about the bore **90**. This enlarged diameter portion **111** further engages the bore **106** of the drum sector.

A spacer ring **112** (FIGS. 4, 5, and 8) is mounted about the rear end of the shaft **109**, abutting the front shoulder that is formed by the enlarged diameter portion **111** of the shaft **109**. The shaft **109** is formed with a flat or keyway **114** that extends axially and forwardly from beneath the spacer ring **112**, to the front end of the shaft. A washer **115** is installed over the shaft **109**, with a protruding portion thereof engaging the keyway **114**, and abutted against the spacer **112**. A pair of space, confronting rings that together provide a tape roll support **116** are mounted on the shaft **109**, a first one of the pair being adjacent the washer **115**. These rings are recessed on their front and rear faces respectively, and thrust washers **118** are engaged in these recesses. The rear thrust washer **118** bears against the washer **115**. A roll or pad R–1 of tape T–1 is mounted on the roll support **116**, on shoulders that are provided by confronting recess portions thereof. A spacer ring **119**, that is preferably formed from a disc of pressed board, is also mounted in the tape roll support **116**, contacting the front face of the tape roll R–1.

A spacer ring **120** is mounted on the shaft **109**, abutting the front thrust washer **118**. The remainder of the axial extent of the shaft **109** is taken up with a similar arrangement of washers **115**, tape roll supports **116**, and thrust washers **118**, all designated by like numerals to those already employed for similar parts. Two additional tape rolls, R–2 and R–3, are mounted on the shaft **109** in this fashion. The free end of the shaft **109** is threaded, and as is best shown in FIG. 8, a ball bearing assembly **121** is mounted over the shaft free end and abutting the front washer **115**. The cylindrical rear end **122** of a clamp nut **124** is engaged over the ball bearing assembly **121**, with the rear, ring-shaped face of the nut disposed to engage against the confronting face of the washer **115**.

Each of the tape roll supports **116** is mounted for rotation about the shaft **109**. To place a desired friction drag on the paper roll supports **116**, however, such that their freedom to rotate about the shaft is controlled, the clamping nut **124** may be tightened against the front washer **115**, by turning it on the threaded end of the shaft **109**. The force that is exerted against the front washer **115** is transmitted through the array of washers **115**, thrust washers **118**, and spacers **120**, that are disposed along the shaft **109**, to exert a force against each tape roll support **116** and thus, through friction, to resist the rotation of the tape rolls R–1, R–2, R–3.

A bracket **125** (FIG. 5) is secured to the rear face of the drum sector **101**. This bracket **125** is formed with a pair of downwardly depending, front and back web portions **126**. These web portions **126** are formed with three pairs of aligned recesses within which three spaced pairs of ball bearing assemblies **128** are respectively disposed. The stub shafts **129** of the three rollers **130** are respectively journalled in a pair of these ball bearing assemblies **128**. These stub shafts **129** are secured in place by nuts **131** that thread on ends of these shafts that project through openings in the rear web portion **126** of the bracket **125**.

The three rollers **130** are arranged in such fashion that their axes are parallel and disposed at the points of a triangle, as is best shown in FIG. 6. Each of these rollers **130** is formed, intermediate its two ends, with a gear **132** that intermeshes with a similar gear on the adjacent roller, in the manner shown in FIGS. 5, 6 and 9. These gears are matched so that each roller moves at the same speed as each other roller.

A tape aligning stud **134** (FIG. 6) is mounted adjacent the rollers **130**, with its lengthwise axis disposed parallel to the axes of the rollers. This stud **134** is disposed in such fashion that tape from the rollers **130** will pass beneath it, as will be explained in greater detail presently.

The tension mechanism

The drum sector **101** is also formed with a shoe portion **135** that generally has the shape of a section of a cylindrical surface, and that has an angular extent of almost 90° (FIG. 6). The upper end of this shoe **135** is disposed to receive the tapes from beneath the guide stud **134**. The shoe **135** is formed with a recess **136** about ⅓ of the way down its arcuate extent, and a guide stud **138** is disposed in this recess. This guide stud **138** is formed with alternating recessed portions **137** and projecting portions **139** (FIG. 13) as is the tape aligning stud **134**, to provide guide channels for guiding the tape as it moves during operation of the device.

As is shown in FIGS. 6 and 13, the guide stud **138** extends between a bracket **140**, that is secured along the proximate side of the shoe **135**, and a flange **153** that extends along the opposite side of the shoe. The stud **138** is secured in place by a pair of set screws **157** that are threaded bores in the bracket **140** and in the flange **153**, respectively. To adjust the angular position of the stud **138**, or to remove it, one or both of the set screws **157** is eased off.

The guide stud **138** is preferably formed, as shown, with three sets of recessed portions **137**, **137*a***, and **137*b***, respectively. Each set consists of three rectangular flats

or recessed portions that are aligned axially of the stud **138**, and each set is angularly spaced about the stud from each other set. Moreover, although the recessed portions in a particular set, such as the three recessed portions **137**, are identical in size and shape, and in elevation relative to the surface of the drum shoe **135**, they differ in size from the recessed portions of each other set, and also in relative axial position on the stud, all as shown in FIG. 13. This permits the stud to be rotated so as to bring a desired set of recessed portions into operating position, thereby to accommodate paper strips of different widths.

The two guide studs **134**, **138** and a third stud **161** (to be described) play an important role in achieving accurate overlay and gap spacing of the paper strips. They are designed so their respective recessed portions, of a particular size, are aligned when in the operating position.

The bracket **140**, that extends along one side of the shoe **135**, is formed with a raised housing portion **141** at its upper end. A cam **142** is journalled in this housing (FIG. 6), and is formed with a part that projects a very short distance out of the housing, over the surface of the shoe **135**. The cam member **142** is formed with an eccentric, projecting shaft **144**, that extends substantially across the entire axial extent of the shoe **135**, and that is spaced somewhat above the top surface thereof. Three separate spring steel strips **145** (FIGS. 6 and 7) are secured to the shaft **144** by angularly adjustable rings **143** that are held in place by set screws **147**. These strips **145** are disposed in axially spaced relation to each other along the length of the shaft **144**, and in position to permit the strips to bear against the tapes T–1, T–2, T–3 from the three supply reels R–1, R–2, R–3, respectively, as the tapes are moved during operation of the device through their respective separate paths as defined by the recesses or guide channels in the guide studs **134** and **138**.

A lever **146**, that has a ball **148** at its end for convenience in gripping, is secured to the cam member **142**, to facilitate adjustments in the angular position of the cam. The cam **142** is so positioned relative to the surface of the shoe **135** that frictional forces tend to hold it in its operating position, as shown in FIG. 6, against the forces exerted by the spring steel strips **145** that tend to rotate it in a counterclockwise direction.

As further shown in FIG. 7, the bracket **140** is formed at its lower end with a pillow block **149**, and a shaft **150** is journalled in this block. This shaft **150** has a short extension projecting from the block **149** on which a crank arm **151** is secured for rotation with the shaft. An operating lever **152** is secured to the crank arm **151**, to permit its rotation between an operating and an "at rest" position, and a gripping knob or ball **154** is mounted on the end of the operating lever. An arm **155** is secured to and adjacent the distal end of the crank arm **151**. This arm **155** is in the form of a bar that extends forwardly and substantially over the entire axial extent of the shoe **135**. The cam **155** is provided with three downwardly projecting fingers **156**, that are disposed for registry against the three spring steel strips **145**, respectively, in the operating position of the device shown in FIG. 6.

A pair of guide studs **158** are disposed on a downwardly projecting extension **159** of the drum sector (FIG. 6), in position to receive the tapes as they leave the surface of the shoe **135**, to guide them in their path. A roller **160** is disposed adjacent the studs **158**, as a guide for the tapes, before they pass through recesses or channels in a tape aligning stud **161** that is mounted at the lower end of a drum sector extension **159**.

A follower arm **162** is pivotally mounted at one of its ends, by a pivot **164**, on the drum sector **101**. A follower roller **165** is mounted at the other end of the follower arm **162**, and is disposed to ride on the surface of the tape roll R–1. A coil spring **166** is interposed between the follower arm **162** and a remote part of the drum sector **101**, constantly to urge the roller **165** against the surface of the tape roll R–1. A contact arm **168** is mounted intermediate the ends of the follower arm, and is disposed to trip the operating lever **169** of a microswitch **170** that is mounted on the drum sector **101**, when the tape supply has diminished to the point where the roll should be replaced. The microswitch **170** is connected, in a manner not shown, to the slip ring **45** (FIG. 2), and through the brush **46** and lead **49**, in a circuit that can shut off the main drive whenever a tape roll is exhausted and should be replaced.

The drive mechanism

The drive mechanism is shown schematically in FIG. 9 as it applies to a single taping head. A single electric motor **171** is connected through a drive shaft **172** to a series of sprockets **174**, of which there is one for each taping head. A chain **175** is wound around the sprocket **174** and around a driven sprocket (not shown), to drive a shaft **176** on which a sprocket **178** is secured. The drive chain **55** (FIGS. 2 and 9) is engaged about the sprocket **178**, to transmit motion through the sprocket **50** to the rotary housing **51**.

To rotate the spider **52** and to drive the three drum sectors **101** about the cable **40** so as to apply tape to the cable, the electric motor **171** is operated to drive the motor shaft **172** and to transmit motion, through the sprockets and chains just described, to rotate the sprocket **50** and with it the rotary housing **51**, which causes the three drums **101** to rotate.

Upon rotation of the housing **51**, each of the three pinions **179** (FIGS. 3 and 9) is carried in an orbit around the fixed shaft **44**, in engagement with the stationary gear **58**. The orbiting pinions **179** are caused to rotate, and each of these pinions in turn engages a gear **180** that drives a gear **210** on the same shaft as bevel gear **181**. Bevel gear **181** in turn drives a bevel gear **182** that is mounted on the end of a shaft **184**, on the opposite end of which another gear **185** is mounted. The gear **185** is disposed to engage a bevel gear **186** that is mounted at one end of a shaft **188**, at the end of which a gear **189** is disposed in driving engagement with a bevel gear **190**, that in turn is in operative engagement through gear **211** with the gear **132** of one of the three driven rollers **130**.

Operation

In setting up the machine for a production run, full rolls of tape are inserted on each of the tape roll supports **116**, by removing the clamping nut **124** and then removing the necessary parts from the shaft **109** to permit loading. In placing a full roll of tape R–1 on its support, the roller **165** on the follower arm **162** is moved out of the way and then replaced in its normal position, engaging the outer surface or periphery of the roll. Preferably, all three rolls of tape on a single drum sector **101** are replaced at once, so as to permit the use of a single follower arm **162** to signal the need for replacement of an empty roll.

Each individual tape T–1, T–2, T–3 is then threaded in the same manner, about the three rollers **130** in the manner shown in FIGS. 6 and 7, so that each tape follows a generally U-shaped path, with the center roller being disposed at the bottom part and inside of the U. Each tape is then threaded under the tape aligning stud **134**, and then beneath its respective spring steel strip **145**. In order to thread a tape beneath a steel strip **145**, the lever **152** is moved in a clockwise direction from the position shown in FIG. 6, to release the pressure on the free ends of all three of the strips. The lever **146** is then rotated in a counterclockwise direction from the position shown in FIG. 6, to provide an unobstructed path through which a tape may be led. Each tape is then passed through the appropriate channel or recess in the upper or outer surface of the guide stud **138**, over the surface of the shoe **135**, between the studs **158**, under the roller **160**, and through

the appropriate recess or channel in the surface of the guide stud **161**.

To prepare for operations, the free end of each tape is secured to the cable **40**. The operating levers **152** and **146** are moved to the positions shown in FIG. 6, so that mild pressure is applied by each of the fingers **156** against the upper surfaces of the steel strips **145**, to hold the strips in place. The angular position of each strip **145** is adjusted on the shaft **144**, to apply a selected pressure to the tape against which it bears. Since each strip is independently adjustable with respect to the shaft **144** through rings **143**, the pressure that is applied by each to its tapes can be different, if desired.

The drag that is applied to each tape comprises two components. The first component is adjustable, and is applied by a respective one of the spring steel strips **145**. The second component is substantially constant in value, and is derived from the frictional forces that are generated as the tape travels over the surface of the shoe **135**.

In order to permit a selected, constant tension to be applied to a tape by the combined effects of the steel spring strips **145** and the travel over the shoe **135**, the tape is delivered to the shoe, for travel under the steel strips, free from tension. This is accomplished in the following manner.

The clamp nut **124** is turned to apply sufficient pressure to the opposite sides of the tape roll supports **116** to provide a frictional drag that will prevent rotation of a given tape roll support, and of the tape pad thereon, except when a sufficiently great direct tension or pull is applied to the tape. This drag prevents free running of the tape when the machine is suddenly slowed or stopped, from operating speed.

The drive mechanism (FIG. 9) is designed so that the three rollers **130** are always driven at a speed that is in excess of the rate of use of tape. As a result, there is an intermittent slight accumulation of tape at the driven rollers **130**, and adjacent the guide stud **134**. As soon as any accumulation of tape develops, however, so that there is slack, the tape is disengaged from the rollers **130**, and the pull on the tape, that causes it to be removed from its roll, stops, and advancement of the tape from the roll stops. Accordingly, the area of tape accumulation can be considered as a delivery point, and at this delivery point the tape is made available under no tension, by the action of the rollers **130**. Tape is thus constantly made available, at the delivery point, free from tension, for advancement over the shoe and beneath the tensioning strips **145**.

The next step in adjusting the machine for operation is to insure that the tape, as it is applied to the cable **40**, is under the selected tension. In the manufacture of oil-impregnated, paper insulated, high voltage cable, it is usually desirable that all of the tapes that are applied about the cable, to build up the dielectric wall, be applied under substantially the same tension, such as, for example, some value within the range from about 2 lbs. to about 6 lbs.; this range is appropriate for paper tape having a width of about ¾" and a thickness on the order of 5 mils. In order to develop a selected or specified value of tension, the spring steel fingers **145** are rotated to bear against the respective tapes, and the arm **155** is swung into position so that the fingers **156** engage the upper surfaces of the respective steel strips **145** to hold them in place. By adjusting the pressure that is applied in this manner, desired tension values can be developed in the tapes.

The tape advancing mechanism of each taping head, then, comprises a tape supply reel from which tape is removed by positively operating withdrawal means that advance the tape to a delivery point at which the tape is available under no tension. As the machine is operated, the tape is continuously withdrawn from this delivery point as it is wound about the cable, and during its passage through a preselected working path between the delivery point and the point of application to the cable, a specified and constant value of tension is applied.

One of the primary advantages of a taping machine, that is constructed in accordance with the present invention, is that the value of this tension is substantially uniform during the entire course of the taping operation. It does not vary as the diameter of the tape supply roll varies, as is usually the case in taping machines that have been available in the past.

Another advantage of a taping machine that is constructed in accordance with the present invention is that, since the tension in the tape is not affected by the diameter of the supply pad, a supply pad or roll of any diameter can be used. Accordingly, it is possible in using taping machines constructed in accordance with the present invention, to use larger diameter pads than have been feasible in the past. Moreover, the tension in the tape is not affected by centrifugal force, as has been the case in the past.

Still another advantage of machines that are constructed in accordance with the present invention is that the discs **119** have been found to cooperate with the frictional drag on the tape roll supports **116**, to apply a drag force across the entire diameter of the pad. This is another feature of the invention that permits the use of supply pads of larger diameter than have been possible in the past. Preferably, the discs **119** are formed for flexibility, as by forming them with stamped-out apertures in angularly-spaced relation, radially spaced from their centers. When these discs are sufficiently flexible, it has been found practicable to employ rolls of tape that are unevenly wound, such as, for example, rolls that are known in the art "dish" rolls. This has not been possible in the past, and it has been necessary and customary, in the past, to rewind dished rolls and other irregularly wound rolls, in order to permit satisfactory application of the tapes.

At each taping head, there is the problem of obtaining desired amounts of overlay or gap spacing, between successive tape windings. As shown in FIG. 12 the three tapes **T–1**, **T–2** and **T–3** (from the three supply reels **R–1**, **R–2**, **R–3** that are illustrated in FIG. 5) are applied about the cable **40** at a spacing, relative to each other, that is governed by the size of the spacer rings **120** between adjacent tape supports **116**, and by the action of the guide studs and rollers. The same is true, of course, for the tapes from each of the three supply rolls **R–1**, **R–2**, **R–3** of each drum section **101**, on a given taping head. However, as shown in FIG. 12, there is a potential problem of obtaining a desired relationship, whether it be gap spacing or overlay, between the three tapes **T–1**, **T–2**, and **T–3** of one drum sector on a particular taping head, and the three tapes **T–4**, **T–5**, and **T–6** from another drum sector on the same taping head. The relationship between these two sets of tapes is established in the following manner.

To adjust the angle at which the tapes from a given drum sector are applied, or, in other words, to adjust the gap spacing or overlay between the three tape windings from a first drum sector and the three tape windings from a second drum sector, as applied about the conductor, at a single taping head, the orientation of the axis of rotation of the reels on one of the drum sectors is adjusted relative to the axis of rotation of the reels on the other. To make this adjustment, the bolt **75** (FIG. 4) is eased off, in order to permit relative movement between the drum support bracket **71** and the slide **62**. The handle **82** is then rotated in one direction or the other, depending upon the direction in which the axis of the tape roll supports **116** is to be adjusted. As the handle **82** is turned, the threaded stud **79** is rotated, and, because of its threaded engagement in the bore of the block **76** that is secured to the upper shelf portion **68** of the slide, the stops **80** and **81** on the lower end of the stud either pull or push against the block **78** on the drum support bracket **71**, to cause the drum support bracket to move in the desired direction. The extent of the movement can be read on the scale

84, and after the desired adjustment has been made, the bolt **75** is again tightened, to hold the drum support bracket **71** in the desired, adjusted position.

The adjustment that has just been described, in the position of the drum support bracket **71**, alters the orientation of the axis of the shaft **109** relative to the cable **40**. Accordingly, the axes of rotation of the three tape supply rolls R–**1**, R–**2**, R–**3** are also adjusted to the same extent.

One of the other operating problems that is frequently encountered in practice is that of obtaining what is called "synchronism" between successive taping heads. This can be regarded as referring to the axial spacing of one set of tapes applied by a first taping head with respect to a second set of tapes applied by a second taping head. In order to adjust the axail spacing, that is to say, the spacing of one head relative to the other in position along the path through which the conductor is moved, the bolts **66** (FIG. 2) of one taping head are eased off, to permit relative movement between the slide **62** and the rotary housing **51**. The handle **63** is then turned in the appropriate direction, to cause the threaded stud **57** to rotate in one direction or the other. Since the stud **57** is threaded through a bore in the block **53**, its remote end will either push against the rear face of the slide, or become disengaged from the slide. The appropriate axial shifting of the slide is then caused to occur, and the extent of this shift can be measured on the scale **200** by observing the change in the position of the pointer **201**. After the desired adjustment has been made, the bolts **66** are again tightened.

For optimum results, it is preferred that in a taping machine that is equipped with three drum sectors for each taping head, a particular color be assigned to each drum sector of each head. Thus, there could be a red, a white, and a blue drum sector at each taping head. Thereafter, in setting up the machine, it is necessary first to obtain the desired relative axial spacing between the three slides of the red, white, and blue drum sectors of a particular taping head. Then, to place the succeeding taping head in synchronism with the first, it is merely necessary to obtain the proper synchronisation between the red drum sectors on the first and second taping heads. The white and blue drum sectors of the second taping head will automatically be synchronized with the white and blue drum sectors of the first taping head, when they are axially positioned relative to their red drum sector in the same way that the white and blue drum sectors of the first taping head are positioned relative to their red drum sector.

Various modifications in the invention will occur to those that are skilled in the art. For example, the term "spider" has been employed herein to refer to the rotary structure at each head, that includes the three drum sectors and their respective associated tape supplies; and each drum sector has been referred to as being equipped with three tape reels. It will be understood, however, that each drum sector could be equipped with a smaller or greater number of reels, and that a smaller number of tapes could be applied from a particular drum sector than the particular maximum capacity of that drum sector for tape reels. Similarly, a greater or smaller number of drum sectors than three could be mounted on each spider.

While a particular kind of constant tension mechanism has been disclosed and is preferred, other mechanisms could also be used for this purpose, in cooperation with the means provided for delivering tape to the tension mechanism, free from tension.

Moreover, although the drive mechanism that is disclosed embodies a single motor that drives all of the operating taping heads simultaneously, in either direction, through an arrangement of shafting, chains and sprockets, and gear trains, a system of timing belts or the like may be employed to replace the chains and sprockets and some or all of the gear trains.

While the invention has been described by reference to the details of a preferred embodiment thereof, then, it is to be understood that such disclosure is intended in an illustrative, rather than in a limiting sense, and it is contemplated that various modifications in the construction and arrangement of the parts, and in the steps of the process, will readily occur to those skilled in the art, within the spirit of the invention and of the scope of the appended claims.

I claim:

1. Apparatus for applying tape about a strand, comprising:

a tape supply;

means for advancing the strand with respect to the tape supply at a given rate which establishes a tape consumption rate, when the tape is attached to the strand;

capstan means for pulling tape from the tape supply and for furnishing said tape to a delivery point intermediate the tape supply and the strand at a rate alternately equal to and greater than the tape consumption rate, to provide tape at the delivery point free from tension;

means for orbiting the delivery point about the strand;

means for guiding and advancing the tape from the delivery point to a point of application to the strand; and

means for applying a selected tension to the tape intermediate the delivery point and the point of application.

2. Apparatus in accordance with claim **1** wherein the means for applying a selected tension includes a cam adapted to exert a bearing load against the tape, said cam being adjustable with respect to its axis of rotation to apply a variable load to the tape, whereby a tension load imparted to the tape to overcome said bearing load is correspondingly variable.

3. Apparatus for applying tape about an electrical conductor comprising:

a tape supply;

a capstan apparatus for pulling tape from the supply and delivering the same to a delivery point, substantially free from tension at the delivery point;

guide means for guiding the tape from the delivery point to the point of application to the conductor;

means for moving said guide means in an orbit about the conductor, to wind the tape about the conductor; and

means for applying a predetermined tension to the tape intermediate the delivery point and the point of application, to apply the tape under tension.

4. Apparatus for winding tape in a generally helical fashion about an electrical conductor to which one end of the tape is secured, comprising:

means for moving the conductor lengthwise;

capstan means for delivering tape from a supply to a delivery point, substantially free from tension at the delivery point;

guide means for guiding the tape from the delivery point to the point of application to the conductor;

means for moving said guide means in an orbit about the conductor as the conductor moves lengthwise such that the tape is wound about the conductor; and

means for applying a selected tension to the tape intermediate the delivery point and the point of application, to apply the tape under tension.

5. Apparatus for winding tape in a generally helical fashion about an electrical conductor to which one end of the tape is secured, at selected rate of use, comprising:

a tape supply;

means for resisting withdrawal of the tape from the supply;

means for withdrawing tape from the supply against the opposition of said withdrawal-resisting means, at alternately the same and slightly greater than the same as the use rate, during use of the tape, to make tape available at a delivery point substantially free from tension;

guide means for guiding the tape from the delivery point to the point of application to the conductor;

means for moving said guide means in an orbit about the conductor, to wind the tape about the conductor; and

means for applying a predetermined tension to the tape intermediate the delivery point and the point of application, to apply the tape under tension.

6. Apparatus for winding tape in a generally helical fashion about an electrical conductor to which one end of the tape is attached, at a selected rate of tape use, comprising:

means for moving the conductor lengthwise;

a tape supply;

means for resisting withdrawal of the tape from the supply;

a capstan that can be engaged with the tape, and that is constantly driven to advance the tape to a delivery point at a rate that is greater than the rate of use, to permit said withdrawal-resisting means to stop advancement of the tape by the capstan;

second guide means for guiding the tape from the delivery point to the point of application to the conductor;

means for moving said second guide means in an orbit about the conductor, to wind the tape about the conductor; and

means for applying a predetermined tension to the tape intermediate the delivery point and the point of application, to apply the tape under tension.

7. Apparatus for applying tape about a strand, comprising:

a head that is formed with means for guiding a strand in lengthwise movement relative thereto;

a spider that is mounted on the head for rotation about the lengthwise axis of the strand;

at least one tape supply reel that is mounted on said spider for revolution about the lengthwise axis of said strand upon rotation of the spider, and for rotary movement for dispensing tape;

means for adjusting the orientation of the axis of rotation of the tape supply reel;

a capstan apparatus for pulling tape from the supply and delivering the same to a delivery point, substantially free from tension at the delivery point;

means for guiding and advancing the tape from the delivery point to the point of application to the strand; and

means for applying a predetermined tension to the tape intermediate the delivery point and the point of application to the strand.

8. Apparatus for applying tape about a strand, comprising:

a head that is formed with means for guiding a strand in lengthwise movement relative thereto;

a spider that is mounted on the head for rotation about the lengthwise axis of the strand;

a plurality of tape supply reels mounted in angularly spaced relation to each other on said spider, for revolution about the lengthwise axis of said strand upon rotation of the spider, and for rotary movement for dispensing tape;

means for adjusting the axis of rotation of each of said tape supply reels;

a capstan apparatus for pulling tape from a respective supply reel and delivering the tape substantially free from tension at a respective delivery point;

guide means associated with each supply reel, for revolving movement about the strand upon revolution of the supply reel, for guiding the tape from the delivery point to the point of application to the conductor; and

means for applying a predetermined tension to the tape intermediate the delivery point and the point of application, to apply the tape under tension.

9. Apparatus for winding tape in a generally helical fashion about an electrical conductor to which one end of the tape is secured, comprising:

means for moving and guiding an electrical conductor lengthwise along path;

a plurality of heads that are fixedly disposed respectively at a corresponding plurality of taping stations along said path;

a plurality of spiders, one of which is mounted on each of said heads, respectively, for rotation about the lengthwise axis of a conductor in its movement through said path;

means for adjusting the position along said path of each of said spiders on its respective head;

a plurality of tape supply reels mounted on each of said spiders and disposed angularly about a respective spider, the reels being mounted for revolution about the electrical conductor upon rotation of the spider, and for rotary movement for dispensing tape;

a plurality of capstan devices consisting of one for each of the angularly disposed tape supply reels, the devices being adapted to advance tape from each supply reel to a delivery point that is associated with each supply reel, substantially free from tension at the delivery point, and each of said capstan devices being mechanically driven through respective gear trains;

guide means associated with each supply reel and mounted for movement upon movement of the associated respective spider, for guiding the tape from the delivery point to the point of application to the conductor; and

means for applying a predetermined tension to the tape intermediate the delivery point and the point of application, to apply the tape under tension.

10. Apparatus for winding tape in a generally helical fashion about an electrical conductor to which one end of the tape is secured, at a selected rate of use, comprising:

means for moving the conductor lengthwise along a path;

a plurality of heads that are fixedly disposed respectively at a corresponding plurality of taping stations along the path;

means associated with each of said heads for guiding an electrical conductor in its movement along said path;

a plurality of spiders, one of which is mounted on each of said heads, respectively, for rotation about the conductor in its movement through said path;

a plurality of tape supply reels mounted in angularly-spaced relation to each other on each of said spiders, respectively, for revolution about the conductor upon rotation of the spider, and for rotary movement for dispensing tape;

means for adjusting the orientation of the axis of rotation of each tape supply reel;

means for adjusting the position along said path of each of said spiders on its respective head;

drag means for resisting the rotation of each of said supply reels, to resist the withdrawal of tape therefrom;

a capstan associated with each supply reel and that is mounted for revolution about the conductor upon rotation of the spider, and that is constantly driven to advance the tape at a rate that is greater than the rate of use;

means to guide the tape from each reel to engage the associated capstan for advancing the tape as the tape is used, and to disengage the capstan when the tape is advanced by the capstan at a rate that is greater that the rate of use, to permit said drag means to stop advancement of the tape from the reel;

guide means associated with each supply reel and mounted for revolution about the conductor upon

rotation of the associated spider, for guiding the tape from the capstan to the point of application to the conductor; and

means for applying a predetermined constant tension to the tape intermediate the capstan and the point of application, to apply the tape under tension.

11. A process for applying tape about a strand, comprising:

restraining tape in a supply reel to prevent withdrawal thereof except under tension;

advancing the tape from the supply reel to an orbiting delivery point such that the tape is free from tension at the delivery point;

advancing and guiding the tape from the delivery point to the point of application to the strand; and

applying a predetermined, substantially constant tension to the tape intermediate the delivery point and the point of application.

12. A process for applying tape about a strand, at a selected rate, comprising:

advancing tape from a supply to a delivery point which orbits the strand at an average rate that is greater than the rate of use, to provide tape at the delivery point free from tension;

interrupting the advancement of the tape to the delivery point when tape accumulates at the delivery point;

advancing and guiding the tape from the delivery point to the point of application; and

applying a predetermined, substantially constant tension to the tape intermediate the delivery point and the point of application.

13. A process for applying tape about an elongate strand, at a selected rate, comprising:

constantly operating a drive member for the tape at a driving rate that is greater than the rate of use of the tape;

operatively engaging the tape with said drive member to advance the tape from a supply to a delivery point at a rate that is greater than the rate of use, to provide tape at the delivery point free from tension;

disengaging the tape from operative driving engagement with the drive member to interrupt the advancement of the tape to the delivery point when tape accumulates at the delivery point;

advancing and guiding the tape from the delivery point to the point of application; and

applying a predetermined, substantially constant tension to the tape intermediate the delivery point and the point of application.

14. A process for winding a tape helically about a strand to which one end of the tape is secured, comprising:

advancing the strand through a path in a lengthwise direction;

revolving a reel of tape about the strand as it is advanced through said path, and simultaneously permitting rotation of said reel to permit tape to be withdrawn therefrom;

restraining the tape in the supply reel to prevent withdrawal thereof except under tension;

advancing the tape from the supply reel to a delivery point such that the tape is free from tension at the delivery point;

advancing and guiding the tape from the delivery point to the point of application to the strand; and

applying a predetermined, substantially constant tension to the tape intermediate the delivery point and the point of application.

15. A process for winding tapes helically about an elongate electrical conductor, to which one end of each of said tapes is secured, at a plurality of different work stations, comprising:

advancing the conductor through a path in a lengthwise direction;

at a first work station along said path, revolving at least a first reel of tape about the conductor as it is advanced along said path, in an orbit at some preselected location along said path at said first work station, and simultaneously permitting said first reel to rotate to permit tape to be withdrawn therefrom;

at a second work station that is spaced along said path from said first work station, revolving at least a second reel of tape about the conductor as it is advanced through said path, in an orbit at some preselected location along said path at said second work station, and simultaneously permitting said second reel to rotate to permit tape to be withdrawn therefrom;

advancing each of said tapes from its respective supply reel to a delivery point that is associated with its supply reel, at a rate that is greater than the rate of use of the tape, to provide tape at the delivery point free from tension;

interrupting the advancement of each tape to its delivery point when tape accumulates at the delivery point;

advancing and guiding the tape from its delivery point to its point of application to the conductor; and

applying a predetermined, substantially constant tension to the tape intermediate its delivery point and its point of application about the conductor.

16. Apparatus for applying tape about a strand comprising:

positively driven means for delivering tape from a supply to a delivery point, substantially free from tension at the delivery point;

means distinct from said first-named means for advancing a strand lengthwise through a taping path;

means for guiding the tape between the delivery point and the strand, for delivering the tape to the strand at a precise location along the length of said taping path;

means for revolving said delivery point and tape about the strand and taping path, to wind the tape about the strand and to cause advancement of the tape through said guidance means, and

means for applying a selected tension to the tape intermediate the delivery point and the point of application to the strand.

17. Apparatus for applying tape about a strand, comprising:

a head;

first means for advancing the strand lengthwise through a taping path;

a spider that is mounted on the head for rotation about said path;

at least one tape supply reel that is mounted on said spider for revolution about said path upon rotation of the spider, and for rotary movement for dispensing tape;

powered means distinct for delivering tape from the supply reel to a delivery point;

means for guiding the tape between the delivery point and the strand, for delivering the tape to the strand at a precise location along the length of said taping path;

means for rotating said spider about the strand and taping path, to wind the tape about the strand and to cause advancement of the tape through said guiding means, and

means for adjusting the orientation of the axis of reel.

rotation of the tape supply reel.

18. Apparatus for applying tape about a strand, comprising:

a head that is formed with means for guiding a strand in lengthwise movement relative thereto;

means for advancing the strand lengthwise through a

taping path in cooperation with the guiding means of said head;

a spider that is mounted on the head for rotation about the taping path;

a plurality of tape supply reels that are mounted in angularly spaced relation to each other on said spider, for revolution about the taping path upon rotation of the spider, and for rotary movement for dispensing tape;

means for restraining the tape in a supply reel to prevent withdrawal thereof except under tension;

means for pulling tape from each of the supply reels and supplying the same at respective delivery points in a tension-free condition;

means for guiding the tape between a respective delivery point and the strand, for delivering the tape to the strand at a precise location along the length of said taping path;

means for rotating said spider about the strand and taping path, to wind the tapes about the strand and to cause advancement of the tapes through said guiding means;

means for applying a selected tension to each tape intermediate a respective delivery point and the point of application to the strand; and

means for adjusting the orientation of the axis of rotation of each of said tape supply reels.

19. Apparatus for applying tape about a strand comprising:

first means for advancing a strand lengthwise through a taping path;

capstan means coordinated with said first means for delivering tape from a supply to a delivery point;

means for revolving said delivery point and tape about the strand and taping path, to wind the tape about the strand and to advance the tape from said delivery point;

means for guiding the tape between the delivery point and the strand through a guiding and tensioning zone; and

stud means disposed in said zone and formed with guide grooves for guiding each tape and causing it to track for delivery to the strand at a precise location along the length of said taping path.

20. Apparatus for applying tape about a strand, comprising:

a head that is formed with means for guiding a stand in lengthwise movement relative thereto;

means for advancing a strand lengthwise through a taping path in cooperation with the guiding means of said head;

a spider that is mounted on the head for rotation about said path;

a plurality of drums mounted on said spider for rotation therewith, each of said drums having a plurality of tape supply reels mounted in side-by-side relationship and adapted for rotary movement for dispensing tape;

means for restraining the tape in a respective supply reel to prevent removal thereof except under tension;

means for pulling tape from each of said supply reels and delivering the same to a respective delivery point, free from tension at the delivery point;

means for rotating said spider and tape supply reels about the strand and taping path, to wind the tapes about the strand and to advance the tapes from said delivery points;

means mounted on the spider for guiding each tape between a respective delivery point and the strand through a guiding and tensioning zone;

stud means disposed in each zone and formed with guide grooves for guiding each tape and causing it to track for delivery to the strand at a precise location along the length of said taping path;

cam actuated means for applying an individually selected tension to each tape in a respective zone; and

means for adjusting the orientation of the axis of rotation of the spider about said taping path.

References Cited

UNITED STATES PATENTS

1,782,381	10/1930	Dunsheath	57—15
2,158,547	5/1939	Lawson et al.	66—132
2,909,890	10/1959	Sheets et al.	57—15
3,093,330	6/1963	Schmidt	242—45
3,137,985	6/1964	Bailey	57—13
3,236,039	2/1966	Fletcher et al.	57—18

BILLY S. TAYLOR, *Primary Examiner.*

U.S. Cl. X.R.

57—160; 156—53

PO-1050
(9/69)

UNITED STATES PATENT OFFICE

CERTIFICATE OF CORRECTION

Patent No. 3,435,602 Dated April 1, 1969

Inventor(s) Chester R. Sheets

It is certified that error appears in the above-identified patent and that said Letters Patent are hereby corrected as shown below:

Column 1, line 67, after "satisfactory" the comma should be a period. Column 3, line 8, the numeral "1" should read -- 12 --. Column 5, line 61, the word "space," should read -- spaced, --; line 64, a comma should be inserted after "faces". Column 6, line 69, the word -- through -- should appear after "threaded". Column 7, line 57, the word "cam" should read -- arm --. Column 10, line 32, the word -- as -- should appear after "art" line 47, the word "section" should read -- sector --. Column 12, line 66, the word -- a -- should appear after "at". Column 14, line 5, the word -- a -- should appear after "along". Column 16, line 57, the words -- from said first means -- should appear after "distinct"; line 69, the word "reel." should be omitted. Column 18, line 1, the word "stand" should read -- strand --.

SIGNED AND
SEALED
MAR 24 1970

(SEAL)
Attest:

Edward M. Fletcher, Jr.
Attesting Officer

WILLIAM E. SCHUYLER, JR
Commissioner of Patents