Jan. 7, 1969 R. J. MUELLER 3,420,997

FLUOROSCOPIC X-RAY TUBE MOUNTING FOR A TILTABLE X-RAY TABLE TO PREVENT MISALIGNMENT

Filed Oct. 31, 1966

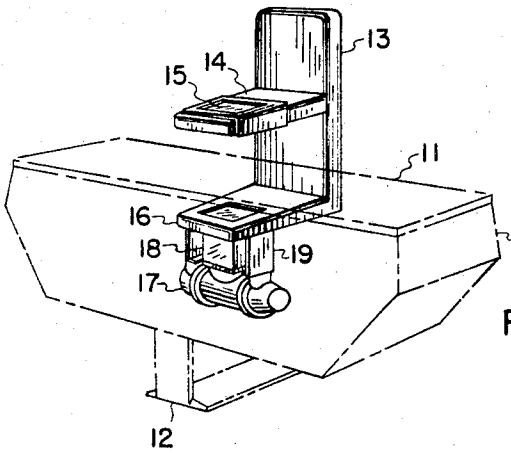


FIG. 1

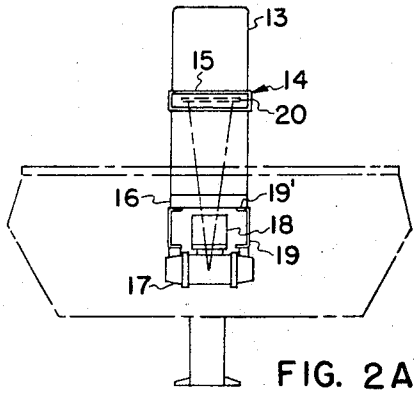


FIG. 2A

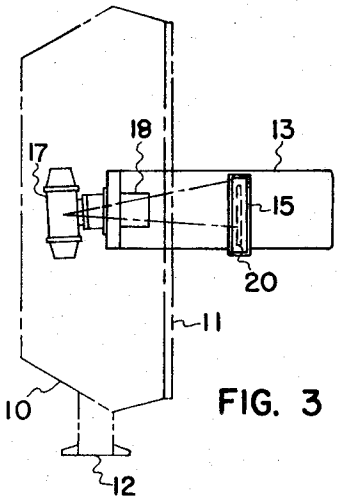


FIG. 3

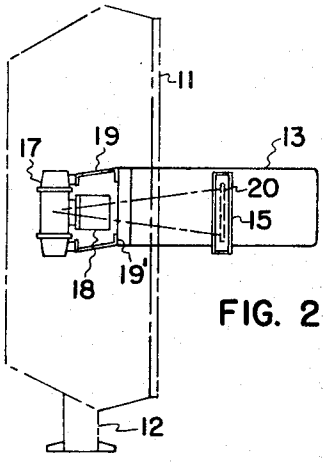


FIG. 2B

INVENTOR.
ROBERT J. MUELLER

BY Ralph D. Hohenfldt
ATTORNEY

United States Patent Office

3,420,997

Patented Jan. 7, 1969

1

3,420,997

# FLUOROSCOPIC X-RAY TUBE MOUNTING FOR A TILTABLE X-RAY TABLE TO PREVENT MISALIGNMENT

Robert J. Mueller, Brookfield, Wis., assignor to General Electric Company, a corporation of New York

Filed Oct. 31, 1966, Ser. No. 590,898

U.S. Cl. 250—57 3 Claims

Int. Cl. H01j *5/48;* H01j *37/22*

## ABSTRACT OF THE DISCLOSURE

An X-ray tube casing and collimator are fastened together and suspended on spaced-apart flexible members from the bottom part of a spot-film tower that extends into the X-ray table. When the table and tube casing are tilted to a vertical position, the flexible members bend slightly to form a parallelogram with the axis of the tube casing in which case the X-ray beam shifts in a plane parallel with its original plane and not at an angle that would amplify misalignment with a fluoroscopic device which is at the other end of the tower above the table.

This invention relates generally to diagnostic X-ray tables, and in particular, to improvement of the fluoroscopic assembly thereof.

Fluoroscopic examinations are conducted with the patient bearing on the top of an X-ray table which may be in various positions between horizontal and vertical. The fluoroscopic X-ray tube and X-ray beam collimator are mounted inside the body of the table so that the beam may project through the table top and patient and form an image which may be visualized on a fluorescent screen that is parallel with the table top. The screen and X-ray tube are supported from a tower which is mounted on rollers within the table for allowing the tower to be shifted laterally and longitudinally of the table in such manner that the central ray of the X-ray beam maintains coincidence with the center of the screen.

The support for the fluorescent screen is usually a part of a spot-film tunnel which stores a film cassette and includes a mechanism for projecting the cassette under the screen in order to make a radiograph after something is observed which the radiologist wants permanently recorded.

When the X-ray table is at or near horizontal, and if the collimator is properly adjusted, the defining rays of the X-ray beam cone will fall within the boundaries of the screen or film and the central ray will coincide with their centers. However, when the table is angulated to a vertical position, the tower deflects because the weights of the spot-film tunnel and the X-ray tube casing are acting on opposite sides of the place at which the tower is mounted. Under this condition, the longitudinal axis of the X-ray tube is no longer truly vertical nor is the central ray of the X-ray beam truly horizontal, in which case an edge of the X-ray image overlaps or shifts off of the edge of the film or screen. A small angular error in the X-ray tube axis causes significant image because the beam movement is amplified by the relatively great distance between the focal spot of the tube and the surfaces on which the beam impinges. Moreover, if the collimator is mounted separately from the X-ray tube, the collimator also tends to misalign and cut off a side of the beam cone, thus aggravating the misalignment of the tube.

2

The conventional approach to remedying this condition has been to make the spot-film tower more massive in order to obtain greater rigidity. However, this conflicts with an opposite objective which is to keep the mass of the spot-film tower and its affiliated components low so that little power is required to shift the tower manually or with a motor drive quickly to any desired position with respect to the table top.

The present invention solves the above outlined problem by taking the unconventional approach of making the X-ray tube supporting structure less rigid rather than more rigid. More, particularly, in accordance with the invention, the X-ray tube and collimator are joined and the X-ray tube casing is attached at its opposite ends to its carriage by means of two relatively flexible members which form opposite and equal sides of a parallelogram. A side that is adjacent and connects the flexible members coincides with the longitudinal axis of the X-ray tube casing. When the table is horizontal, the X-ray tube casing is suspended straight down from the flexible members which are then loaded only in tension. The longitudinal axis of the X-ray tube forms a rectangle with the flexible members under this condition. When the table is tilted vertically, each flexible member deflects by the same amount under the cantilever loading imposed by the X-ray tube casing, but the members remain in parallelism and the axis of the X-ray tube casing also remains parallel with the table top since the axis is one side of a closed parallelogram. Thus, the X-ray beam remains horizontal. There is a small shift of the horizontal beam in a vertical direction in this case, but it is inconsequential and usually not perceptible because the distance amplification described above is not present when the X-ray tube does not turn angularly.

Generally speaking, it is an object of this invention to improve fluoroscopic X-ray techniques.

Specific objects of the invention are to mount a fluoroscopic X-ray tube in such manner that its axis and a viewing device are maintained in parallelism when the X-ray table is angulated to positions other than horizontal and to achieve this end by simple, inexpensive and yet effective means.

Achievement of the foregoing and other more specific objects will appear from time-to-time throughout the course of the ensuing specification.

An illustrative embodiment of the invention will now be described in reference to the drawing in which:

FIGURE 1 is a perspective view of an X-ray table and the principal components of a fluoroscopic device which incorporates the invention;

FIGURE 2A is a front view of the X-ray table of FIGURE 1 with its top disposed in a horizontal position;

FIGURE 2B shows the X-ray table angulated to a vertical position and with the parallelogram mounted X-ray tube casing shifted vertically by an amount that is exaggerated in order to illustrate the invention; and,

FIGURE 3 shows the disposition of the X-ray tube casing when the X-ray table is angulated vertically and the X-ray tube casing is mounted in the manner of the prior art.

FIGURE 1 shows the outline of an X-ray table body **10** that is provided with a patient supporting top **11**. The body is mounted on a floorstand **12** in respect to which the body may be tilted to move the patient to various positions between horizontal and vertical. The mechanism for angulating the table and for translating it so its end clears the floor when angulating is omitted for clarity and because it forms no part of the instant invention.

The table is provided with a fluoroscope tower **13** which has a spot-film tunnel **14** that projects laterally over the table and is adapted for movement vertically on tower **13**. The top and front part of the spot-film tunnel is provided with an X-ray image sensitive means such as a fluorescent screen **15**. In many cases, an amplifying X-ray-to-optical-image converter, not shown, is used instead of screen **15**. Within the back part of tunnel **14**, but not shown, is a film cassette storage area and mechanism for projecting the cassette under the fluoroscopic screen **15** to enable taking a radiograph of the image on the screen when desired. The features described thus far are conventional and well-known.

Projecting into table body **10** from the bottom of tower **13**, which is primarily a support structure, is an X-ray tube carriage **16**. The carriage is ordinarily supported on tracks, not shown, which permit the tower to be moved laterally and longitudinally of the table. An X-ray tube casing **17** is suspended from carriage **16**. Attached to the X-ray tube casing is an X-ray beam collimator box **18** for defining the X-ray beam so that no more of the patient is irradiated than is necessary to form a full size image on fluorescent screen **15** or the cassette **20** inside of tunnel **14**. Collimator **18** may be similar to one described in U.S. Patent No. 3,206,604, issued to L. S. Burchell, on Sept. 14, 1965, and assigned to the assignee of the instant invention.

FIGURE 1 illustrates how the X-ray tube casing and the collimator **18**, which is attached to it, are suspended from carriage **16** on a pair of flat relatively thin sheet metal plates **19**. These plates are formed as channels having flanges **19'** to facilitate their being attached at the top to carriage **16** and at the bottom to the X-ray tube casing **17**, as can be seen more clearly in FIGURE 2A which omits the attaching screws. When the X-ray table is horizontal and tower **13** is vertical as it is in FIGURES 1 and 2A, the plates **19** form the ends of a rectangle that has one long side formed by carriage **16** and the other long side parallel with the longitudinal axis of X-ray tube casing **17**. When the table is in this position, one may see in FIGURE 2A that the X-ray beam, which is defined by broken lines, projects from the focal spot in tube casing **17** through the collimator and impinges centrally on the film in cassette **20** if it has been projected forward by the spot-film device or on fluorescent screen **15**. In practice, the collimator **18** is adjusted so that the limiting rays of the beam fall within the boundaries of the fluorescent screen **15** and the film area that is being exposed in cassette **20**.

When the X-ray table is angulated from its horizontal position of FIGURE 2A to its vertical position as shown in FIGURE 2B, the spot-film tower tends to deflect or shift vertically due to its own weight and the X-ray tube casing **17** tends to shift vertically under the influence of gravity. Ordinarily, this would cause significant misalignment of the X-ray beam with the fluorescent screen **15** and cassette **20**. However, in accordance with the present invention, the tube casing supporting plates **19** flex at the corner formed by the plates and their flanges **19'** and assume a parallelogram configuration which, in turn, maintains the longitudinal axis of X-ray tube casing **17** in parallelism with the table top **11** for any position between horizontal and vertical. In practice, the parallelogram departs very little from a true rectangle, but sufficiently to avoid the axis of tube casing **17** assuming an acute angle with respect to the plane of table top **11**.



The minor shifting of casing **17** in the long direction of the parallelogram causes the projected X-ray image to shift just enough to correct for the deflection of the spot-film tunnel including the screen and cassette. There is no motion amplification about a pivot point.

Conditions prevailing in FIGURE 2B may be compared with those in FIGURE 3, which shows an X-ray tube casing **17** purportedly rigidly mounted in a conventional manner. In this case, regardless of the stiffness of the design, the axis of tube casing **17** is inclined to rotate as shown and assume an acute angle with respect to the plane of table top **11** as a result of distance and motion amplification. One may see in FIGURE 3 that the upper defining ray of the X-ray image is projected beyond the edge of either the film cassette **20** or screen **15** thus producing an off-center and only partial picture. It has never been possible to build enough strength into the spot-film tower and the X-ray tube casing support to avoid this situation completely. Moreover, the condition has become more bothersome in recent years since a heavy image amplifier is often attached in place of the fluorescent screen **15**.

One may see particularly well in FIGURE 2B that there is additional merit in mounting collimator **18** directly on tube casing **17**. With this arrangement, the casing and collimator shift in parallel by the same amount so that the collimator does not contribute to cutting off any more of the beam. Contrast this with the condition in FIGURE 3 where the tube casing **17** and collimator **19** become misaligned as a result of the casing tilting and the collimator remaining stationary in which case more of the beam is cut off than would normally be the case if only the tube were tilted when the X-ray table is positioned vertically.

Although one method for mounting an X-ray tube casing on a support that assumes a parallelogram shape when the table is tilted vertically has been described, those versed in the art of mechanical design will derive from this design suggestions for parallelogram supports that use something other than the flexible plates. For instance, the tube support can be made to pendulate on pivot points instead of flexing at the corner of the flanges **19'** and side plates **19**. Therefore, it should be understood that the design shown is illustrative rather than limiting, for the invention may be variously embodied and is to be limited only by construing the claims which follow.

It is claimed:

**1.** X-ray apparatus comprising:

(a) an X-ray table including a table top,

(b) a spot-film tower that is translatable laterally and longitudinally with respect to the table,

(c) a spot-film tunnel supported on the tower and extending laterally across one face of the table top,

(d) an X-ray tube carriage extending from the tower laterally across the other face of the table top, said tunnel and carriage tending to shift cross-wise of the tower and in the same direction under the influence of gravity when the tower becomes more nearly horizontal as a result of the table being tilted toward vertical position,

(e) an X-ray tube casing and means for supporting the casing from the carriage in a direction away from the tunnel,

(f) the last-named supporting means comprising members that are attached respectively near opposite ends of the casing and to the carriage and are adapted to deflect to form opposite sides of a parallelogram when the longitudinal axis of the casing is other than substantially horizontal, the said longitudinal axis forming another side of a parallelogram that maintains substantial parallelism with the tunnel.

**2.** The invention set forth in claim **1** wherein:

(a) said members comprise metal plates that deflect under the weight of the tube casing.

3. X-ray apparatus comprising:

(a) a support structure,

(b) an X-ray image visualizing means and an X-ray tube casing having a longitudinal axis, said means and casing each being mounted on the structure spaced apart from each other, said structure being adapted for being angulated between vertical and horizontal positions in which case the visualizing means and tube casing tend to shift under the influence of gravity crosswise of the structure,

(c) a pair of members interposed between the support structure and the casing and attached respectively near opposite ends of the casing and to the support structure, the said members being adapted to deflect in the same direction when the longitudinal axis of the casing is tilted to other than horizontal position, whereby said members form a parallelogram in conjunction with each other and the longitudinal axis of the casing.




**References Cited**

UNITED STATES PATENTS

| | | | |
|---|---|---|---|
| 2,000,497 | 5/1935 | Pohl | 250—58 |
| 2,552,858 | 5/1951 | Mueller et al. | 250—58 |


WILLIAM F. LINDQUIST, *Primary Examiner.*

U.S. Cl. X.R.

250—91