Oct. 22, 1968 JIROMARU TSUJINO 3,406,684

JET TYPE, MEDICAL INJECTION INSTRUMENT

Filed Sept. 20, 1965

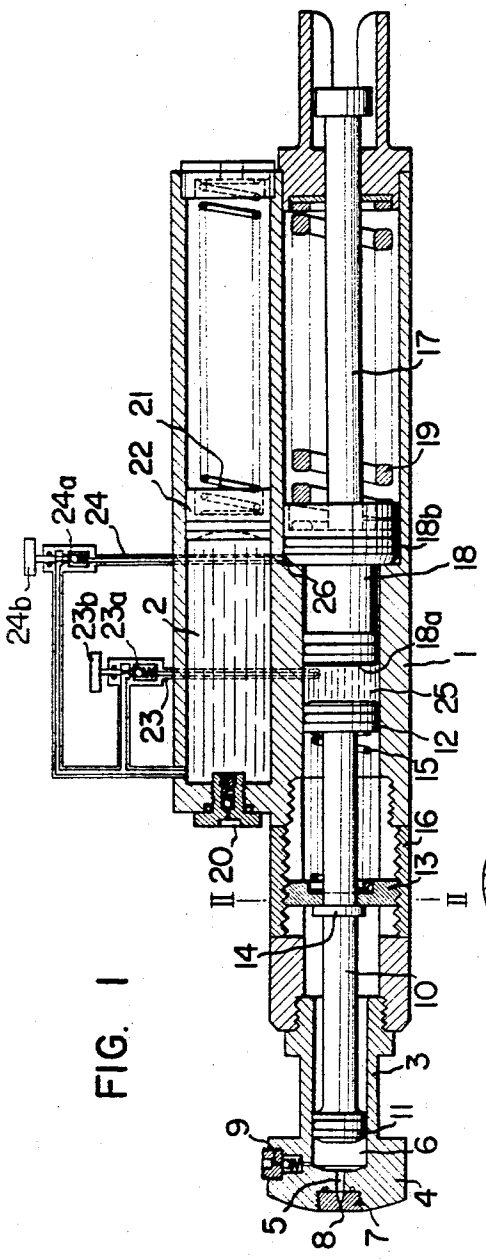

FIG. 1

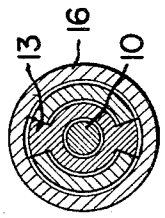

FIG. 2

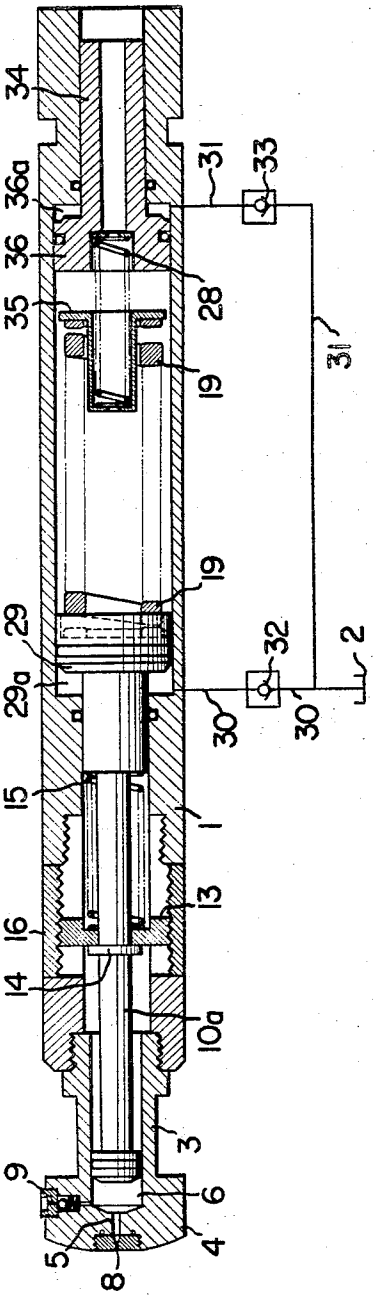

FIG. 3

INVENTOR.
Jiromaru Tsujino

BY
George B. Oxenham
Attorney

United States Patent Office

3,406,684

Patented Oct. 22, 1968

1

3,406,684

JET TYPE, MEDICAL INJECTION INSTRUMENT

Jiromaru Tsujino, Suginami-ku, Tokyo-to, Japan, assignor to Kabushiki Kaisha Yuryo Kikakuhin Kenkyusho, Tokyo-to, Japan, a joint-stock company of Japan

Filed Sept. 20, 1965, Ser. No. 488,398
Claims priority, application Japan, Sept. 28, 1964, 39/54,501
5 Claims. (Cl. 128—173)

ABSTRACT OF THE DISCLOSURE

A jet type, medical injection instrument which comprises a barrel having at its forward end an injection fluid pumping cylinder provided with an injection head and an injection fluid charging means, an injection fluid plunger rod disposed in said barrel, means for adjustably controlling the position of said rod to adjust the quantity of the injection fluid corresponding to a required dosage, a driving spring means disposed in said barrel and actuating said rod, a reservoir filled with a pressurized medium, and a device for supplying said pressurized medium into said barrel to maintain said driving spring means in the compressed state in the case of charging the injection fluid and to actuate said spring means in the case of injection operation.

This invention relates to medical injection instruments and more particularly to high-speed, multidose injection instruments of the so-called jet type.

More specifically, the present invention concerns a new and improved jet injection instrument by which vaccine or other injection fluid can be injected by a jet of the injection fluid directly into a bodily part such as under the skin of a subject into whom the injection fluid is to be injected without the use of an injection needle.

An object of the present invention is to provide a jet type injection instrument by which medical injections can be accomplished in a painless and sanitary manner by a simple operation.

Another object of the invention is to provide an injection instrument which has a device for regulating the dosage of injection whereby injection fluid of the optimum dosage can be administered to each individual.

Still another object of the invention is to provide an injection instrument in which all operational parts necessary for injection of the medicament fluid are built in or assembled integrally in the injection instrument, which thereby is rendered portable and highly convenient in handling and can be used in a simple manner in place of the conventional injection syringe with hypodermic needle.

A further object of the invention is to provide an injection instrument of relatively simple and light construction which can be operated repeatedly and rapidly for successive doses of injection fluid by simple manipulations.

According to the present invention, briefly stated, there is provided a jet type, medical injection instrument comprising essentialy pumping means for expelling injection fluid of accurately metered dosage through a small orifice, driving means to actuate the pumping means, and a hydraulic system to control the driving means.

The nature, principle, and details of the invention will be more clearly apparent from the following detailed description of a preferred embodiment of the invention, when read in conjunction with the accompanying drawing in which like parts are designated by like reference numerals, and in which:

FIG. 1 is a longitudinal sectional view showing the

2

embodiment of the injection instrument according to the invention;

FIG. 2 is a sectional view taken along a plane indicated by line II–II in FIG. 1; and

FIG. 3 is a longitudinal sectional view, partly in schematic form, showing another embodiment of the invention.

Referring to FIG. 1, the embodiment of the injection instrument according to the invention shown therein has an injection barrel **1**, on one lateral side of which there is provided integrally therewith a hydraulic fluid reservoir **2**, and at the forward end of which there is provided an injection fluid charging and pumping cylinder **3** having a nozzle head **4** and disposed coaxially with the barrel **1**. By pressing the forward end of the nozzle head **4** against the skin of a subject and operating the instrument in the manner described hereinafter, a metered dose of injection fluid can be jet injected through a nozzle passage **5** in the nozzle head **4** and thence under the skin of the subject.

The nozzle passage **5** communicates at its rear end with an injection fluid chamber **6** in the nozzle head **4** and its forward end with a small diameter orifice **8** bored in an orifice insert **7** made of a hard material which will resist deformation and wear. In the operation of the instrument, the injection fluid under high pressure is ejected instantaneously through the orifice **8** and introduced under pressure under the skin of the subject.

Injection fluid is charged into the injection fluid chamber **6** through an inlet fitting **9** including a non-return valve provided on the side wall of the nozzle head **4**. By fitting the end of a container such as an ampule containing the injection fluid into this inlet fitting **9**, a suitable dose of the injection fluid can be supplied into the chamber **6**.

Within the injection fluid charging and pumping cylinder **3** and the forward half portion of the injection barrel **1**, there is provided an injection fluid plunger rod **10** having at its forward end a piston **11** slidable in the cylinder **3** and at its rear end a piston **12** slidable in the barrel **1**, and further having a flange **14** fixed thereto at an intermediate point between the pistons **11** and **12**. The rear surface of this flange **14** normally is pressed in contact with an adjusting member **13** by the force of a coil spring **15** fitted in compressed state around the rod **10** between the rear surface of the adjusting member **13** and the forward surface of the piston **12**. The adjusting member **13** is provided at its periphery with screw threads engaging with corresponding threads on the bore of a fluid dosage adjusting ring **16**.

By rotating the adjusting ring **16**, the plunger rod **10** is caused to move rearwardly, whereby injection fluid is drawn into the injection fluid chamber **6** through the inlet fitting **9**. Moreover, the dose of the injection fluid can be regulated to the required quantity by selecting the rotational position to which the fluid dosage adjusting ring **16** is brought.

The injection barrel **1** is provided within its rear half portion with a pressure applying rod **17** having at its forward end a stepped piston **18**, against the rear surface of which powerful coil spring **19** is fitted. This mechanism thus constitutes a driving source for imparting injection action to the injection fluid as will be described hereinafter.

The aforementioned hydraulic fluid reservoir **2** is prefilled with hydraulic fluid through an inlet fitting **20**. Within this reservoir **2** at its one end, there are provided a piston **22** and a coil spring **21** exerting a force on the piston **22**, whereby the fluid within the reservoir is constantly under pressure, and relief action is afforded cor-

responding to variation in the volume of the fluid within the reservoir.

Communicating pipes or conduits **23** and **24** are provided to introduce hydraulic fluid within the reservoir **2** into the injection barrel **1** and respectively have at their intermediate points a valve **23***a* for charging of the injection fluid and a valve **24***a* for injection. One communicating pipe (**23**) is so connected as to fill the space within the injection barrel **1** between the rear surface of the piston **12** and the forward surface **18***a* of the piston **18**, said space constituting a forward hydraulic chamber **25**. The other communicating pipe **24** is connected to a rear hydraulic chamber **26** formed between the stepped part **18***b* of the piston **18** and the inner wall of the injection barrel **1**.

Therefore, when the pressure applying rod **17** is moved rearwardly by manual or some other suitable means (not shown), the coil spring **19** is compressed as the piston is retracted rearwardly, and, at the same time, hydraulic fluid within the hydraulic fluid reservoir **2** is drawn through the valve **24***a* and through the piston stepped part **18***b* into the rear hydraulic fluid chamber **26**. This hydraulic fluid so drawn is prevented from flowing back because the valve **24***a* is a non-return or check valve, whereby the piston **18** is held in a cocked state in its retracted piston.

The injection instrument of the above described construction according to the invention is operated in the following manner to jet inject an injection fluid under the skin of a subject.

First, the fluid dosage adjusting ring **16** is rotationally adjusted to set the volume of the injection fluid chamber **6** at the required dosage of the injection fluid, and the required dose of the fluid is charged into the chamber **6**. The pressure applying rod **17** is retracted in the aforementioned manner to place and hold the piston in the cocked state.

The operator then presses the nozzle head **4** of the injection barrel **1** against the skin surface of the subject and then depresses a button **24***b* to open the valve **24***a*, whereupon the hydraulic fluid within the rear hydraulic fluid chamber **26** holding the piston **18** in the retracted position returns into the hydraulic fluid reservoir **2**. Consequently, the piston **18** is thrust forward by the elastic strain energy stored in the coil spring **19** thereby to cause the injection fluid plunger rod **10**, through the hydraulic fluid sealed in within the forward hydraulic chamber **25**, to plunge forward, whereby the injection fluid of the metered dosage within the chamber **6** is injected at high velocity and under high pressure through the orifice **8** under the skin of the subject. Thus, the injection operation is accomplished in an instantaneous manner.

Then, when the injection operation is to be repeated, a button **23***b* for opening the valve **23***a* (non-return valve) for injection fluid charging is depressed to open the valve **23***a*, whereupon a portion of the hydraulic fluid within the forward hydraulic fluid chamber **25** is permitted to return to the hydraulic fluid reservoir **2**. Consequently, the coil spring **15** causes the injection fluid plunger rod **10** to move rearwardly, whereby a new dose of injection liquid is drawn into the injection fluid chamber **6**.

In another embodiment of the invention as shown in FIG. 3, the injection barrel **1** is provided with a hydraulic fluid reservoir **2** connected through communication paths or conduits **30** and **31** to different parts of the barrel **1** as will be described hereinafter. The paths **30** and **31** respectively have a non-return (check) valve **32** to operate at the time of injection and a non-return valve **33** to operate at the time of injection fluid recharging. While the above named parts, which constitute the hydraulic fluid supply and control system, are shown schematically for the sake of simplicity of illustration, this system may be of any suitable form such as that illustrated in FIG. 1.

The construction and operation of the forward part of the instant injection instrument is essentially the same as that of the above described first embodiment of the invention, and description thereof will, therefore, be omitted.

The injection fluid plunger rod **10***a* differs from the plunger rod **10** shown in FIG. 1 in that it is fixed at its rear end directly to a piston **29**, on the rear side of which a powerful coil spring **19** for driving is disposed coaxially to act thereupon, the piston **29** and coil spring **19** being disposed and operating within a cylinder in the injection barrel **1**. Rearward adjustment of the adjusting member **13** results in the coil spring **15** forcing the plunger rod **10***a* rearwardly, whereby this rearward movement is transmitted through the piston **29** and spring **19** to compress a relatively weak coil spring **28** disposed at the rear part of the injection barrel **1** as will be described hereinafter.

The coil spring **19**, as in the aforedescribed example of the invention, constitutes a driving power source for injection operation when it is compressed. For compressing this spring **19**, there is provided within the rear part of the injection barrel **1** a ram member **34**, between which and the spring **19** there are interposed a spring seat **35** and the aforementioned weak spring **28**. The spring constant of this spring **28** is so selected that the spring **28** can be easily compressed by the force of the spring **15**.

One (**30**) of the aforementioned communication paths **30** and **31** is connected to communicate with a forward hydraulic chamber **29***a* formed forwardly of the piston **29**, and the other communication path **31** is connected to communicate with a rear hydraulic chamber **36***a* formed to the rear of a piston **36** provided at the forward extremity of the ram member **34**.

When the ram member **34** is pushed forward by manual or some other means (not shown) to compress the coil spring **19**, hydraulic fluid within hydraulic fluid reservoir **2** simultaneously opens the non-return valve **33** and is drawn into the rear hydraulic chamber **36***a*. Since this pressurized hydraulic fluid so drawn in is prevented from flowing backward by the non-return valve **33**, the ram member **34** will not retract rearwardly even if it is released, whereby the driving spring **19** can be maintained in a compressed or cocked state.

The injection instrument of the above described construction is operated in the following manner. First, the injection fluid chamber **6** is charged with the required dose of injection fluid by rotating the adjusting ring **16** exactly as described hereinbefore with respect to the embodiment shown in FIGS. 1 and 2.

The ram member **34** is then pushed forward, whereupon it first compresses the weak spring **28** until it contacts the spring seat **35** and then causes the spring seat **35** to compress the driving spring **19**. At the same time, hydraulic fluid is drawn through the communication path **31**, past the non-return valve **33**, into rear hydraulic chamber **36***a* as described hereinbefore to place the driving spring **19** in the compressed and cocked state.

The operator then presses the nozzle head **4** of the injection barrel **1** against the surface of the skin of the subject and opens the non-return valve **32** by manual or some other means, whereupon the hydraulic fluid in the forward hydraulic chamber **29***a* returns to the hydraulic fluid reservoir, and the elastic strain energy stored in the driving spring **19** is released to thrust the piston **29** and plunger rod **10** forward. Consequently, the injection fluid within the chamber **6** is injected through the orifice **5** at high velocity and pressure under the skin of the subject, whereby injection is accomplished instantaneously.

Then, when the injection procedure is to be repeated, the non-return valve **33** for injection fluid charging is opened by manual or some other means (not shown), whereupon the hydraulic fluid in the rear hydraulic chamber **36***a* is permitted to return to the reservoir **2**. Consequently, the spring **15** causes the plunger rod **10** together with the driving spring **19** to retract rearwardly as it compresses the weak spring **28**, whereby a new dose of injec-

tion fluid determined by the adjusting member **13** is drawn into the injection fluid chamber **6**.

Thus, an important and advantageous feature of the injection instrument of the present invention is that injection can be accomplished merely by opening the hydraulic system valve for injection and that recharging of the injection fluid chamber **6** with a new dose of the injection fluid can be accomplished merely by opening the valve for charging. Accordingly, the present invention provides an injection instrument of simple injection procedure whereby injection can be carried out painlessly and sanitarily without the necessity of hypodermically plunging a needle into the subject as in the case of a conventional injection instrument.

Another important feature of the injection instrument of the invention is that, since the dosage of the injection fluid can be readily adjusted for each individual subject, the injection instrument can be used widely and generally in the same manner as a conventional injection instrument.

Furthermore, as described above, the hydraulic fluid reservoir is provided integrally with the injection barrel in the injection instrument of the instant invention, and the hydraulic fluid is utilized in an ingenious manner whereby the hydraulic fluid sent into the injection barrel, on one hand, makes possible the recharging of injection fluid for repeated injection when this hydraulic fluid is caused to flow back into the reservoir and, on the other hand, causes the coil spring **19** installed within the injection barrel as a driving source for injection to be cocked, that is, held in its compressed state, thereby affording jet injection of the injection fluid at any desired time.

It should be understood, of course, that the foregoing disclosure relates to only preferred embodiments of the invention and that it is intended to cover all changes and modifications of the examples of the invention herein chosen for the purposes of the disclosure, which do not constitute departures from the spirit and scope of the invention as set forth in the appended claims.

What I claim is:

1. A jet type medical injection instrument which comprises a barrel having at its forward end an injection fluid pumping cylinder provided with an injection head and an injection fluid charging means including an inlet fitting for attachment thereto of containing means having therein an injection fluid, an injection fluid stepped plunger rod disposed in said barrel, stepped means in the barrel cooperating with the stepped plunger rod for adjustably controlling the position of said rod to adjust the quantity of the injection fluid corresponding to a required dosage, spring holding means towards the rear of said barrel, a driving spring means, a driving piston driven by said spring means defining forward and rear chambers said spring means and piston being disposed in said barrel and actuating said rod, a reservoir adjacent to said barrel filled with a pressurized fluid medium, and valve means and flow conduits for supplying said pressurized fluid medium into said barrel rear chamber to maintain said driving spring means in the compressed state in the case of charging the injection fluid and to actuate said spring means and return the fluid medium to the reservoir via said other chamber in the case of injection operation.

2. A jet type, medical injection instrument comprising, in combination as an integral assembly, a stepped barrel with a rear end at least partially closed for holding a spring having at its forward end an injection fluid pumping cylinder provided at its forward extremity with an injection orifice and at its side with injection fluid charging means, including an inlet fitting for attachment thereto of containing means having therein an injection fluid, an injection fluid stepped plunger rod disposed axially within the barrel and having at its forward end a forward piston operating in the injection fluid pumping cylinder and at its rear end a rear piston operating in the barrel, stepped means in the barrel cooperating with the stepped plunger rod for adjustably controlling rearward movement of the plunger rod, a stepped hydraulic piston disposed axially within the barrel and having a small piston part and a large piston part, a forward hydraulic chamber being formable between the small piston part and plunger rod, and a rear hydraulic chamber being formable between the large piston part and a stepped wall of the barrel, a driving coil spring disposed for compression against said barrel rear end to act on the rear surface of the stepped hydraulic piston, a hydraulic fluid reservoir mounted on the barrel and filled with pressurized hydraulic fluid, a first conduit with a valve for injection-fluid charging operation connected between the reservoir and the rear hydraulic chamber, for applying hydraulic fluid into said chamber to maintain said coil spring in a compressed state, a second conduit with a valve for injection operation connected between the reservoir and the forward hydraulic chamber, and means to operate said valves of the first and second conduits so as to compress said coil spring while charging injection fluid and returning the hydraulic fluid to the reservoir during the injection operation.

3. A jet type, medical injection instrument comprising, in combination as an integral assembly, a stepped barrel with retaining means towards the rear thereof for holding a spring having at its forward end an injection fluid pumping cylinder provided at its forward extremity with an injection orifice and at its side with injection fluid charging means, including an inlet fitting for attachment thereto of containing means having therein an injection fluid, an injection fluid stepped plunger rod disposed axially within the barrel and having at its forward end a forward piston operating in the injection fluid pumping cylinder and at its rear end a hydraulic piston operating in the barrel, stepped means in the barrel cooperating with the stepped plunger rod for adjustably controlling rearward movement of the plunger rod, a driving coil spring held at its rear end by said retaining means and in contact at its forward end with the rear surface of the hydraulic piston, a ram member for compressing the driving coil spring disposed behind the driving coil and having a piston operating in the barrel, a forward hydraulic chamber being formable between the hydraulic piston and a stepped wall of the barrel, and a rear hydraulic chamber being formable between the rear surface of the piston of the ram member and the rear wall of the barrel, a hydraulic fluid reservoir mounted on the barrel and filled with pressurized hydraulic fluid, a first conduit with a valve for injection fluid charging operation connected between the reservoir and the rear hydraulic chamber for applying hydraulic fluid into said chamber to maintain said coil spring in the compressed state, a second conduit with a valve for injection operation connected between the reservoir and the forward hydraulic chamber, and means to operate said valves of the first and second conduits so as to compress said coil spring while charging injection fluid and returning the hydraulic fluid to the reservoir during the injection operation.

4. A jet-type medical injection instrument comprising in combination as an integral assembly:

(a) a barrel **1** with its forward end open and its rear end closed;

(b) a hydraulic fluid reservoir **2** provided integrally with said barrel on one lateral side thereof and filled with pressurized hydraulic fluid;

(c) an injection fluid charging and pumping cylinder **3** provided at the forward end of and coaxially with said barrel, said cylinder having at its forward extremity an injection orifice **8** and at its lateral side an injection fluid charging means **9**;

(d) an injection fluid plunger rod **10** disposed axially within said barrel and having at its forward end a forward piston **11** operating in the injection fluid charging and pumping cylinder and at its rear end a rear piston **12** operating in the barrel and further at its intermediate point between said pistons a fixed flange **14**;

(e) a fluid dosage adjusting means **16** coaxially and rotatably disposed at a forward part of the barrel and being threaded on the inner periphery with which an adjusting member **13** having corresponding screw threads at its periphery is engaged, said fixed flange being press-contacted with said adjusting member by a spring force to adjustably control reciprocal movement of said plunger rod;

(f) a pressure applying rod **17** provided in the rear half of said barrel and having at its forward end a stepped piston consisting of a small piston part and a large piston part disposed axially within the barrel, the rear half of said barrel having small bore and large bore respectively to permit said small piston part and said large piston part to slide therein to form a forward hydraulic chamber **25** between the small piston part and the rear piston **12**, and a rear hydraulic chamber **26** between the large piston part and a stepped wall of said barrel;

(g) a driving spring **19** in contact at its forward end with the rear surface of said stepped piston to exert a driving power for injection operation;

(h) a first conduit **24** with a valve **24*a*** for injection operation and for holding said stepped piston at a desired position, said conduit being connected between said reservoir and said rear hydraulic chamber;

(i) a second conduit **23** with a valve **23*a*** for injection fluid charging and pumping operation connected between said reservoir and said forward hydraulic chamber; and

(j) means to operate said valves of the first and second conduits.

5. A jet-type medical injection instrument comprising in combination as an integral assembly:

(a) a barrel **1** having a small bore in the forward portion thereof, a large bore in the intermediate portion thereof, and a small bore in the rear portion thereof to form stepped barrels therewith;

(b) a hydraulic fluid reservoir **2** connected to different parts of said barrel through conduits;

(c) an injection fluid charging and pumping cylinder **3** provided at the forward end of and coaxially with said barrel, said cylinder having at its forward extremity an injection orifice **8** and at its lateral side an injection fluid charging means **9**;

(d) an injection fluid plunger rod **10*a*** disposed axially within the forward portion of said barrel and having at its forward end a forward piston operating in the injection fluid charging and pumping cylinder, and at its rear end a rear piston **29** of large diameter to operate in the large bore of the intermediate portion of said barrel to form a forward hydraulic chamber **29*a*** between the rear piston part and a stepped wall of the barrel, and further at its intermediate point between said pistons and a fixed flange **14**;

(e) a fluid dosage adjusting means **16** coaxially and rotatably disposed at the forward portion of the barrel and being threaded on the inner periphery with which an adjusting member **13** having corresponding screw threads at its periphery is engaged, said fixed flange being press-contacted with said adjusting member by a spring force to adjustably control reciprocal movement of said plunger rod;

(f) a driving spring **19** in contact at its forward end with the rear surface of said rear piston of large diameter to exert a driving power for injection operation;

(g) a ram member **34** disposed at the rear part of said driving spring and having at its forward end a piston **36** operating in the intermediate portion of large bore of said barrel, said ram member being for compressing the driving spring and said piston having a coaxial recess for receiving one end of a small spring **28** and forming a rear hydraulic chamber **36*a*** between the forward piston part and a rear stepped wall of the barrel;

(h) a spring seat **35** to receive the rear end of said driving spring, said seat having a recess coaxial to said barrel to receive another end of said small spring;

(i) a first conduit **30** with a valve **32** for injection operation and for holding said piston at a desired position, said conduit being connected between said reservoir and said forward hydraulic chamber **29*a***;

(j) a second conduit **31** with a valve **33** for injection fluid charging and pumping operation connected between said reservoir and said rear hydraulic chamber; and

(k) means to operate said valves of the first and second conduits.

References Cited

UNITED STATES PATENTS

2,687,724	8/1954	Ziherl et al.	128—173
3,057,349	10/1962	Ismach	128—173

RICHARD A. GAUDET, *Primary Examiner.*

M. F. MAJESTIC, *Assistant Examiner.*