May 7, 1968 W. BACHMAN 3,381,913

SYNCHRONIZED COIL UNWINDER AND REWINDER

Filed Dec. 12, 1966 3 Sheets-Sheet 1

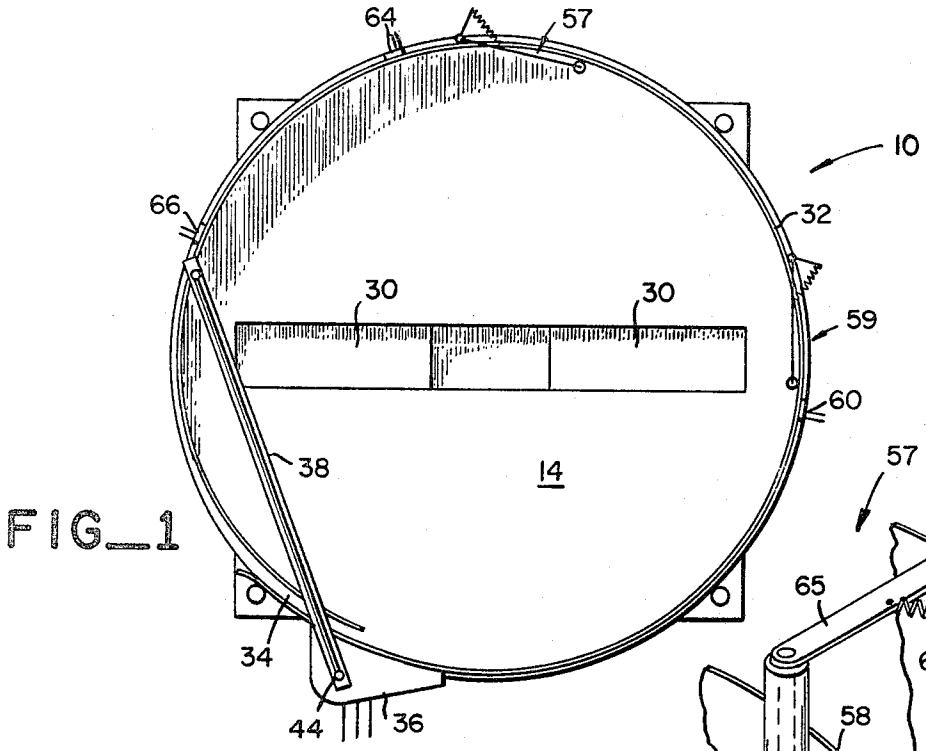

FIG_1

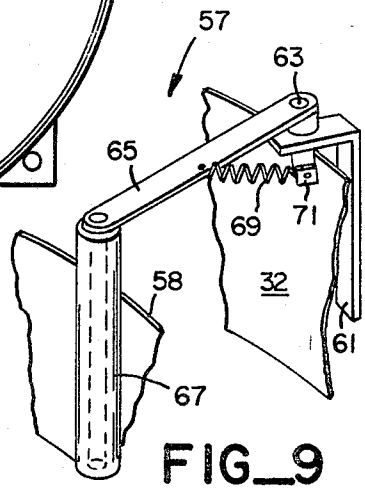

FIG_9

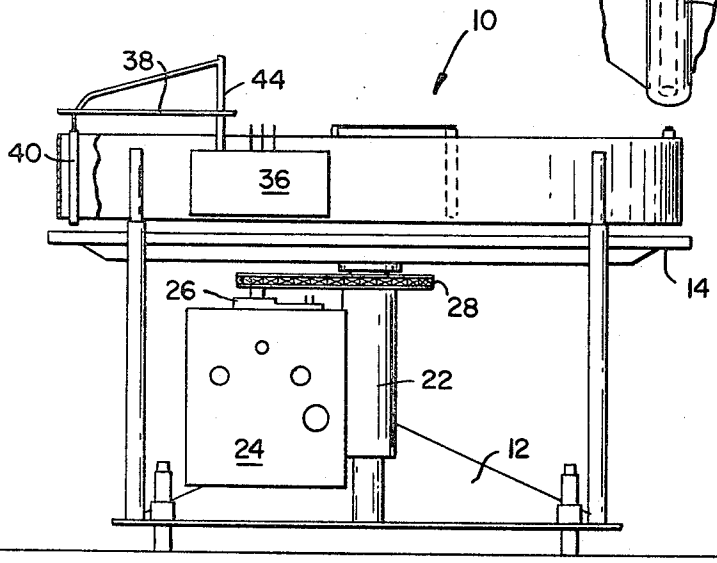

FIG_2

INVENTOR.
WILLIAM BACHMAN
BY
Mellin, Moore & Weissenberger
ATTORNEYS

SYNCHRONIZED COIL UNWINDER AND REWINDER

Filed Dec. 12, 1966 3 Sheets-Sheet 2

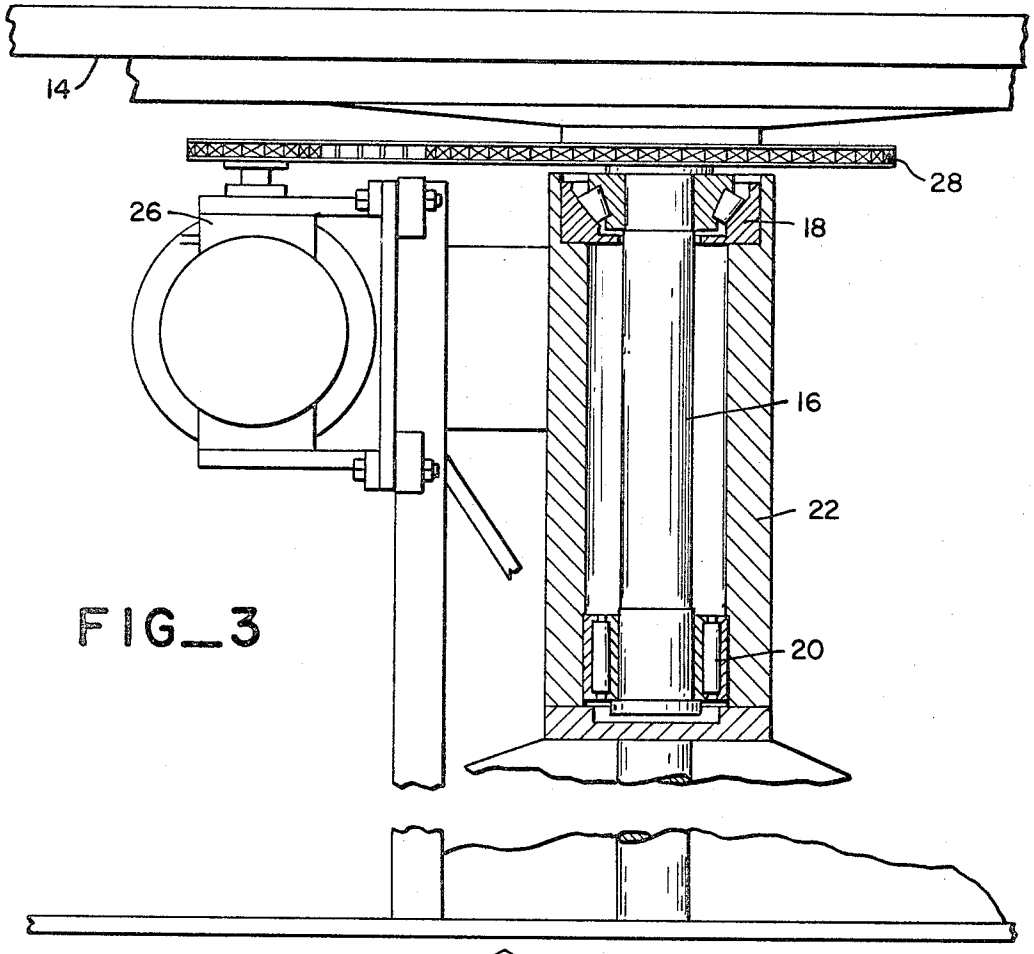

FIG_3

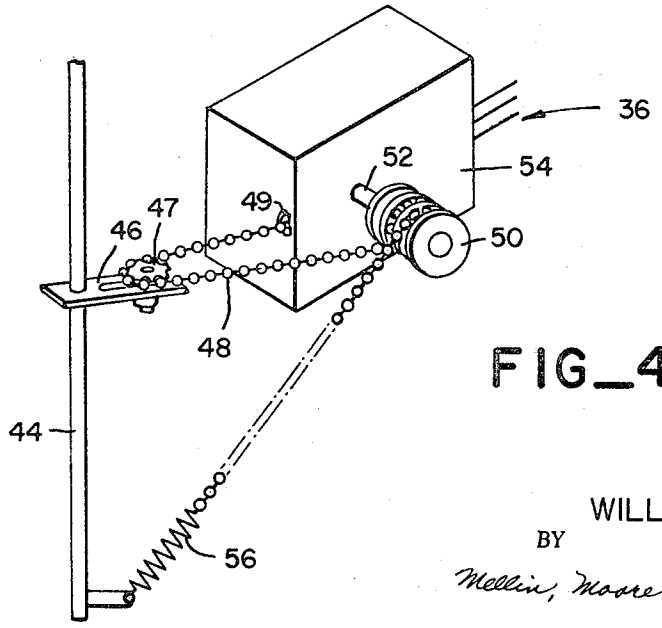

FIG_4

INVENTOR.
WILLIAM BACHMAN
BY
Mellin, Moore & Weissenberger
ATTORNEYS

SYNCHRONIZED COIL UNWINDER AND REWINDER

Filed Dec. 12, 1966 3 Sheets-Sheet 3

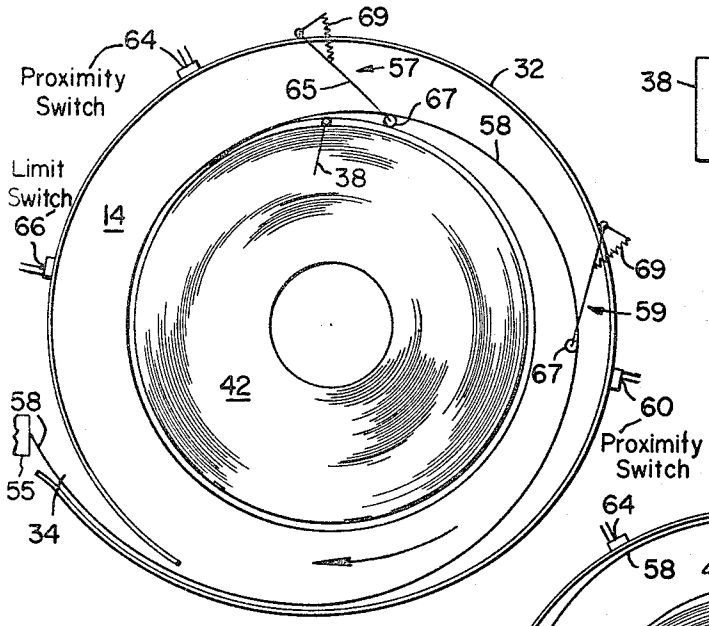

FIG_5

FIG_8

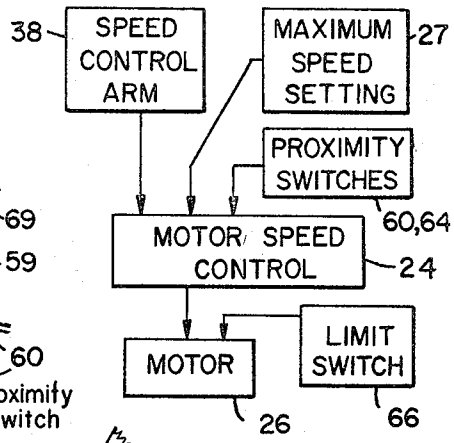

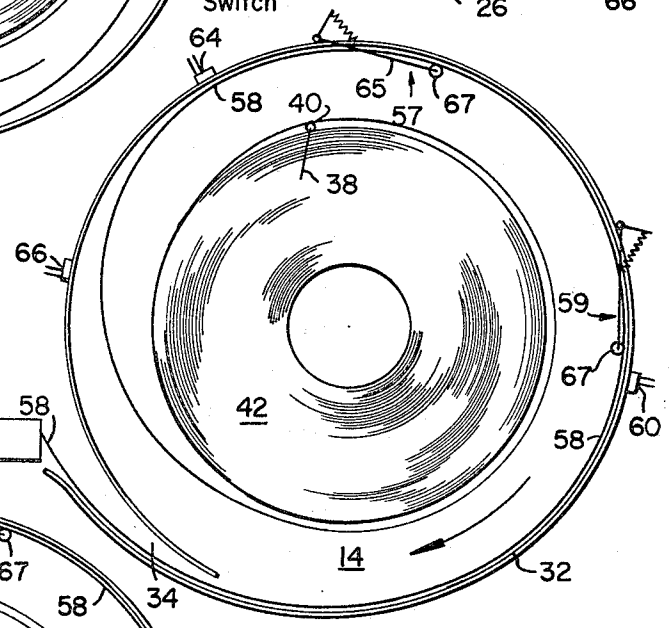

FIG_6

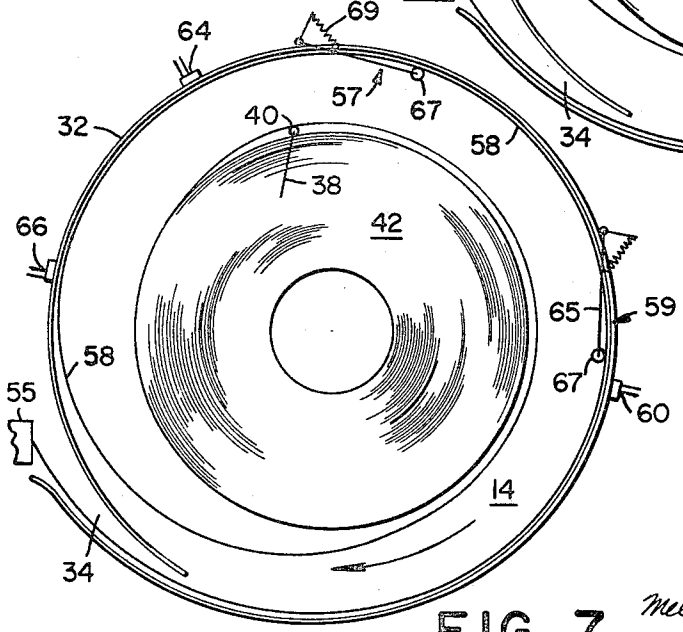

FIG_7

INVENTOR.
WILLIAM BACHMAN
BY
Mellin, Moore & Weissenberger
ATTORNEYS

United States Patent Office

3,381,913

Patented May 7, 1968

1

3,381,913
SYNCHRONIZED COIL UNWINDER AND REWINDER

William Bachman, 4824 Fulton St., San Francisco, Calif. 94121

Filed Dec. 12, 1966, Ser. No. 601,045
7 Claims. (Cl. 242—78.6)

ABSTRACT OF THE DISCLOSURE

Coiled strip placed on a turntable with the axis vertical is payed out in synchronism with the acceptance rate of a consuming machine by alternatingly driving the turntable slightly above and slightly below the acceptance speed. Tightening and loosening of the outer convolutions of the coil absorbs the speed differential and operates the speed control mechanism. Anti-hunting means are provided. Means for separating stuck adjacent convolutions prior to pay-out are also provided.

This invention relates to a device for winding or unwinding coiled strip in synchronism with the movement of a feeding or consuming machine, and more particularly to a machine of this type which incorporates provisions for guarding against the snarling or excessive bending of the strip.

In the operation of a punch press or other strip-consuming machinery it is necessary to feed coiled strip to the punch press at a rate synchronized with the strip consumption by the punch press. Inasmuch as a coil of strip can be extremely heavy and therefore has a considerable inertia, it is necessary to provide a positive drive for the strip which will feed the strip to the punch press in synchronism with its operation and which can follow the stops and starts of the punch press without damage to the strip. In this respect, the control of the strip movement has to be quite accurate, because coated strip, for example, is extremely susceptible to bending and abrasion and therefore precautions must be taken to prevent any substantial disparities between the strip consumption by the punch press and the strip feed by the coil driving mechanism.

Prior art devices for this purpose generally had two disadvantages: for one, the coiled strip was mounted with its axis horizontal, and therefore if the punch press or other consuming machine was of such a type as to accept the strip in a vertical plane, the strip had to be righted from a horizontal to a vertical position against the effect of gravity. Secondly, the coil drive was of the start and stop type and was therefore inclined to "hunt." The present invention, on the other hand, provides for a variable speed turntable on which the coil is positioned with its axis vertical. In this manner, the strip can be used either to feed a vertical plane machine without any change in the position of the strip, or a horizontal plane machine or anything in between by merely letting the strip fall to the desired position under the influence of gravity. Also, the drive of this invention is so arranged as to continuously vary between a speed somewhat in excess of the strip consumption rate and a speed somewhat below the strip consumption rate with a definite time delay so as to effectively control any tendency of the device to "hunt."

Another problem of prior art devices was the fact that since strip as used is usually sheared from a wider strip, the edges of the strip have burrs which on occasion firmly lock one convolution to the next. Consequently, if such a condition occurs, prior art devices were unable to tear the two convolutions loose from one another before a sufficient bending stress had been imparted to the strip

2

as to damage the strip and make it unusable for the purpose intended.

The machine of this invention, however, is provided with a roller arm which serves not only as a speed control device, but which also pulls apart adjacent convolutions of the strip before any major bending stress can be imparted to them.

It is therefore the object of this invention to provide a synchronized coil drive which achieves synchronization by alternating between a slight over-speed and a slight under-speed condition at controllable intervals.

It is another object of the invention to provide a coiled strip-handling device which can handle a coil of strip with its axis in a vertical position.

It is still another object of the invention to provide a device of the type described in which means are provided for separating adjacent convolutions of the strip prior to their being payed-out from the coil of strip.

It is still another object of this invention to provide a device of the type described in which the coil drive is controlled by the degree of looseness of the outermost convolution of the strip.

These and other objects of the invention will become apparent from a perusal of the following specification, taken in connection with the accompanying drawings in which:

FIG. 1 is a plan view of the device of the invention;

FIG. 2 is an elevation of the device of FIG. 1;

FIG. 3 is a detail elevation of the drive mechanism;

FIG. 4 is a detail view of the continuous speed control;

FIG. 5 is a plan view of the device with a coil on it when the pay-out is normal;

FIG. 6 is a view similar to FIG. 5 showing the condition when the rate of strip consumption of the manufacturing machine has slowed somewhat;

FIG. 7 is a view similar to FIG. 5 showing the condition in which the rate of strip consumption of the manufacturing machine has slowed severely;

FIG. 8 is a block diagram depicting the electrical interrelationship of the control components of the device; and

FIG. 9 is a detail perspective view of the loop-forming tensioning arms.

The apparatus of this invention is generally shown at 10 in FIGS. 1 and 2. It consists of a base 12 on which a turntable 14 is rotatably mounted on an axle 16 (FIG. 3) which is supported on ball bearings 18, 20 in the cylindrical center portion 22 of the base 12. The base 12 carries the electrical control mechanism 24 which regulates the speed of the drive motor 26 and turns it on and off, and on which the desired maximum pay-out speed can be set by a control 27 (FIG. 8). The motor 26 which is resiliently mounted on the base 12 in a conventional manner, drives the turntable 14 through a chain drive 28 of a conventional type.

The turntable 14, which is provided with recesses 30 to accommodate a coil handling mechanism shown in my copending application Ser. No. 601,197 filed Dec. 12, 1966, is surrounded with an annular guard 32 which is spirally relieved at 34 to permit pay-out of the strip as best shown in FIG. 5. Mounted on the guard 32 is a speed control mechanism 36, more clearly shown in FIG. 4, which controls the turntable speed in accordance with the diameter of the coil at any given instant by means of an arm 38. The arm 38 carries at its outer end a vertical roller 40 which is held between the next-to-outermost and the second-to-outermost convolutions of the strip coil 42 (FIG. 2) and also separates these two convolutions if they are stuck together by burrs.

Referring to FIGS. 1, 2, and 4, it will be seen that the shaft 44 of arm 38 is rotatably mounted and is provided

with a horizontally extending bracket **46** carrying a pulley **47** about which is threaded a chain **48**. The chain **48** is anchored at a fixed anchor point **49** and is wound about a drum **50** attached to the shaft **52** of an electrical potentiometer schematically depicted as a box **54** in FIG. 4. The other end of the chain **48** is secured to an anchored spring **56**. Thus, pivotal movement of the arm **44** as the strip is unwound controls the angular position of potentiometers **54** in such a manner as to maintain the feed rate of strip **58** independent of the diameter of the coil. The device described is capable of a diameter discrimination of as little as two layers of strip.

When the outermost convolution of strip **58** becomes loose for reasons hereinafter described, the strip **58** is guided toward the guard **32** by a pair of tensioning arms **57, 59** (FIGS. 1 and 5–7) shown in detail in FIG. 9. They are mounted on guard **32** by a bracket **61** which supports a bearing **63**. The bearing **63** pivotally supports a horizontal arm **65** from whose outer end depends a vertically positioned, rubber-surfaced roller **67** which is freely rotatable. The arm **65** is biased in a counterclockwise direction in FIGS. 1 and 9 by a spring **69** attached to a spring bracket **71**. The bracket is arcuately adjustable about bearing **63** to vary the force with which the roller **67** is urged in a counterclockwise direction against the strip **58**. The positioning of arms **57, 59** on the periphery of guard **32** is such that under the greatest tightness of the strip expected to be encountered in operation, the outermost convolution will nowhere touch the next-to-outermost convolution, to avoid feedback of a jerky draw or consumption back into the device.

The operation of the device is as follows: Normally, the strip **58** will be generally in the position of FIG. 5. In that position, both of the proximity switches **60, 64** are open, and the master speed control of the machine is so adjusted that the strip **58** pays out at a rate approximately 5 percent faster than the rate of acceptance of the consuming machine **55**. This being the case, it will readily be seen that the outermost convolution of strip **58** will gradually become slacker and slacker, and the arms **57, 59** will force the outermost convolution of strip toward the guard **32**.

Eventually, the strip **58** comes sufficiently near to the proximity switch **60** to trip it. The proximity switches **60, 64** are so arranged in the control mechanism of the device in a well-known manner that it takes closing of both proximity switches to actuate the speed control mechanism, but that closing of any one of the proximity switches **60, 64** is sufficient to hold the speed control mechanism in the "slow" position once it has been put into the "slow" position by the closing of both proximity switches. Consequently, the closing of proximity switch **60** in the sequence just described has no effect. The device will continue to operate at a speed slightly greater than the acceptance rate of the machine **55**, and the outermost convolution of strip **58** continues to become more loose. Eventually, the outermost convolution becomes loose enough for the strip **58** to close the second proximity switch **64**. At this point, with both proximity switches closed, the speed control of the device shifts to the "slow" position, and the pay-out speed of the strip **58** drops to approximately 5 percent below the acceptance rate of the machine **55**. At this point, it will be readily seen that the outermost convolution of strip **58** will begin to tighten again and first of all the strip will be pulled away from proximity switch **64** so that proximity switch **64** opens. As pointed out above, however, this has no effect as proximity switch **60** alone is sufficient to hold the speed control in the "slow" position. The outermost convolution therefore continues to tighten until finally, it becomes tight enough to pull the strip **58** away from proximity switch **60** and open it also.

With both proximity switches now open, the speed control shifts back to the fast position, and the cycle starts over again. Because of the time delay between the actuation of the two proximity switches in each direction of the cycle, "hunting" is effectively prevented and the device alternates slowly between the fast and slow conditions at a rate dictated essentially by the rate of consumption of the strip by the machine **55**.

It will be understood that the same time delaying effect accomplished by the interaction of proximity switches **60** and **64** described above could be accomplished by a fixed time delay following the actuation, in either direction, of a single proximity switch, or by such other time delaying means as may be appropriate and convenient in a particular application.

If the consuming machine **55** now stops, the resulting loosening of the outermost convolution of strip will first trip proximity switch **60** and then proximity switch **64**. At this point, the speed control slows down, but the device continues to operate. If the machine **55** is still stopped, the outermost convolution of strip **58** will continue to loosen even more, and eventually the strip **58** will come into contact with the limit switch **66** and will trip the same. When this occurs, the turntable is shut off and braked to an immediate stop, so that no further loosening of the outermost convolution can occur.

If the machine **55** is now restarted, the consequent tightening of the outermost convolution of strip **58** first results in drawing the strip **58** away from the limit switch **66** whereupon the turntable starts rotating in the slow position of the speed control. As soon as further tightening of the outermost convolution opens proximity switches **64** and then **60**, the device switches to fast speed, and the cycle of operation continues as previously described.

It will be appreciated that the fast speed of the motor speed control **24** can be preset to any desired amount by the maximum speed setting **27** (FIG. 8) to conform to the requirements of any given consuming machine **55**. The tracking accuracy of arm **44** can be adjusted by adjusting the positioning of pulley **47** on bracket **46** (FIG. 4), and a wide range of speeds can be obtained by adjusting the relative ratio of the speed control servo **54** and the resistance of the machine speed setting control **27** in accordance with well-known electrical engineering principles.

It will be seen that the foregoing apparatus provides a dependable, self starting and stopping hunt-proof device for feeding strip to a consuming machine. The demand cycling method described herein can, it will be appreciated, be equally well applied to a strip winding device as to a strip unwinding device; and of course, the turntable can be built to pay out the strip in a clockwise or counterclockwise direction. Obviously, the invention can be carried out in many different ways, and the embodiment shown and described herein is merely illustrative. Consequently, I do not desire to be limited by the embodiment shown and described, but only by the scope of the following claims.

I claim:

1. A device for paying out strip from a coil to strip-consuming apparatus in synchronism with the strip consumption rate of said apparatus, comprising:

(a) a turntable for rotatably supporting said coil, at least the outermost convolution of said coil being adapted to tighten and loosen in accordance with the tension of the strip being payed out;

(b) means for driving said turntable selectively at a slightly faster and a slightly slower strip pay-out rate than the acceptance rate of said apparatus; and

(c) means for reciprocating said turntable drive rate between said faster and slower rate in accordance with the tightening and loosening of said outermost convolution as a result of the speed differential between said pay-out rate and said acceptance rate.

2. The device of claim **1**, further comprising separating means inserted between adjacent convolutions substantially next inward from said outermost convolution to separate said convolutions if they are stuck together.

3. The device of claim 2, in which servomechanical means are provided to sense the position of said separating means and to control the drive rate of said turntable in accordance with said position.

4. The device of claim 1, in which said reciprocating means include means to switch said drive rate to said lower rate when said outermost convolution reaches a first predetermined degree of looseness, and to switch said drive rate to said faster rate when said outermost convolution tightens beyond a second predetermined lesser degree of looseness.

5. The device of claim 4, further including means for stopping said turntable when said outermost coil loosens to a third predetermined degree of looseness greater than said first degree of looseness.

6. The device of claim 4, further including means biasing said outermost convolution outwardly against the tension in said strip.

7. The device of claim 6, in which said switching means include a pair of proximity switches closed by said strip, respectively, at said second and first degrees of looseness; said switches being so arranged that said drive rate becomes slow only when both said switches close, and becomes fast again only when both said switches are open.

References Cited

UNITED STATES PATENTS

2,161,228 6/1939 Littell ---------- 242—78.6

FRANK J. COHEN, *Primary Examiner.*