May 7, 1968 G. R. JACOBSEN 3,381,713

TURNING VANE AND RAIL CONSTRUCTION

Filed Oct. 14, 1965

Fig. 1

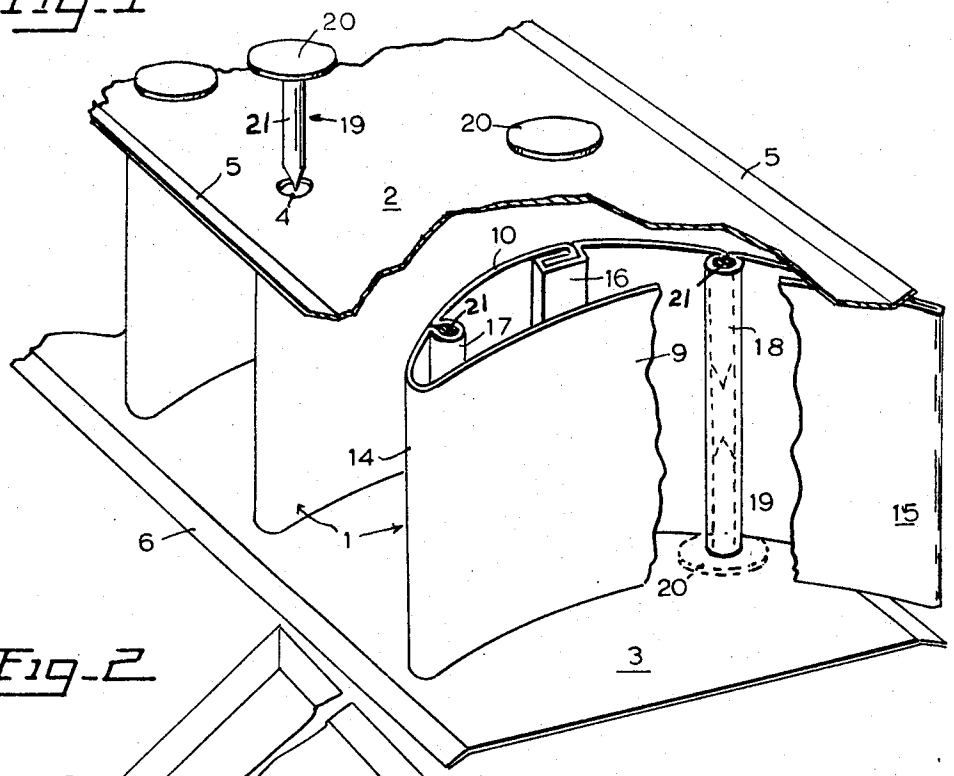

Fig. 2

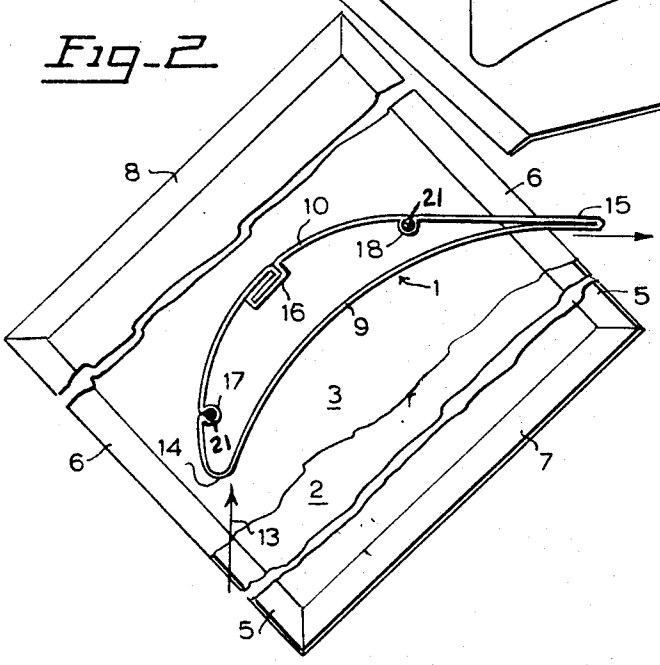

INVENTOR.
GORDON R. JACOBSEN
BY
Boyken, Mohler, Foster & Schlemmer
ATTORNEYS

United States Patent Office

3,381,713

Patented May 7, 1968

1

3,381,713

TURNING VANE AND RAIL CONSTRUCTION

Gordon R. Jacobsen, 4248 Newberry Court,
Palo Alto, Calif. 94306

Filed Oct. 14, 1965, Ser. No. 496,105
6 Claims. (Cl. 138—39)

ABSTRACT OF THE DISCLOSURE

A hollow, air turning vane formed from sheet material to provide a concave front wall having air deflecting surface and a rear wall having a convex rear surface. One of said walls is bent to form parallel, open-ended, cylindrical sections extending transversely across the vane for driving pins or nails into said open ends to secure each vane between rails or the opposed side walls of an air duct.

This invention relates to turning vanes such as used within the corners or bends of air ducts. A cascade or row of such vanes in spaced relation is commonly employed within each angular turn of a rectangular air duct in air conditioning systems and elsewhere to substantially eliminate eddy currents and turbulence in the corners and to insure a steady uniform flow of air through the duct.

A cascade of turning vanes adapted for installation within the bend of an air duct comprises a pair of spaced, opposed elongated rails or strips of sheet metal in side by side relation with the vanes of the row thereof extending between said rails. The vanes themselves are secured to the rails. Heretofore, the common practice has been to form slitted protrusions on the rails, which protrusions project toward each other from the opposed faces of the rails, and the end edges of the vanes extend into and project from the opposite side of the slits of opposed pairs. The projecting portions of the vanes are peened or bent over for securing the vanes to the rails, as is shown in U.S. Letters Patent No. 2,861,597, issued Nov. 25, 1958, to M. M. Gracer.

One type of vane shown in the aforesaid patent is a double vane, in which a pair of transversely bowed strips of different cross sectional curvatures are secured together along two of their opposite edges with their concave surfaces facing in the same direction to space the strips apart intermediate their said opposite edges. The invention hereinafter described shows a double type of turning vane.

One of the objects of the present invention is the provision of means for more economically and more positively securing turning vanes at their ends to the mounting rails, the latter extending transversely across their ends.

Another object of the invention is the provision of an improved double turning vane having a more efficient cross sectional contour, and which vane is formed from a single sheet of material, including improved means for use in securing it to the rails without bending the rails or bending the vanes in the step of securing the vane to the rails.

An added object of the invention is the provision of improved means in a double turning vane for securing the vane to rails, and a still further object of the invention is the provision of the combination of a double turning vane and rails including improved means for securing the vane to the rails.

Other objects and advantages will appear in the description and drawings, in which:

FIG. 1 is a fragmentary, perspective view of part of a cascade or assembly of double vanes showing the means for securing the vanes to the rails, one of the securing means or fasteners being in a position preparatory to being driven into fastening position. Parts of the cascade are broken away and in cross section.

2

FIG. 2 is a fragmentary view part elevational and part sectional view showing an end of one of the vanes, in elevation, in a cascade, and parts of the rails, the latter being broken in length and the fasteners being shown in cross section.

In detail, the vanes of a cascade are generally designated **1**, and the opposed rails are designated **2** and **3** (FIG. 1). Rails **2**, **3** are each formed with a pair of rows of holes **4**, which rows extend longitudinally of the rails **2**, **3**, and the holes or openings in the rows in rail **2** are in registering relation with corresponding holes in the rail **3**. The vanes are secured at their ends to the side rails, as will later be described in detail.

Rails **2**, **3** are of the same uniform width and constitute flat strips of sheet metal in parallel spaced opposed relation when in a position with the vanes extending between them. Marginal portions **5**, **6** of the pair of rails **2**, **3** (FIG. 1) extend slantingly away from each other, as do the corresponding end marginal portions **7**, **8** (FIG. 2). Thus the oppositely outwardly facing surfaces of the pair of rails provide shallow recesses, with the slanted marginal portions defining the sides thereof. The central portions of the rails within and extending between said marginal portions are flat, and the openings or holes **4** are in these central portions, with the holes of the rows in rail **2** in axial alignment with the holes in rail **3**.

Each vane is formed from a single strip of sheet material, such as sheet metal, bowed to different curvatures one dimension between two opposite parallel edges to provide a front wall or blade **9** and a rear wall or blade **10** that are straight and parallel in their dimensions at right angles to dimension in which they are bowed. The concave surfaces of the walls **9**, **10** face in the same direction with the wall **10** developed about a shorter radius than the wall **9**.

The words "front" and "rear" are used relative to the direction of air flow, the front wall having its concavely curved surface positioned to deflect the air while air in the duct passes behind the vanes and past their convex rear surfaces when the latter are positioned in a bend in the duct.

The words "leading" and "trailing" as herein used relate to the edges of each vane that faces toward and away from the oncoming air in a duct. The leading edge faces said oncoming air and the trailing edge faces away from it.

The "longitudinal" dimension of each vane is the dimension in a direction parallel to leading and trailing edges irrespective of whether such dimension is longer or shorter than the transverse dimension, or the direction in which the vane is bowed, since the vanes may be of any desired length. In FIG. 1 they are indicated as being relatively short in length.

The arrow **13** in FIG. 2 indicates the direction of flow of the air, and walls **9**, **10** are rounded at their juncture **14** at the leading edge of the vane in accordance with usual aerodynamical practice to form a curved relatively blunt leading edge, with the space between the walls **9**, **10** being progressively greater toward an intermediate point between the leading and trailing edges and the walls **9**, **10** join at the trailing portion **15** to form a sharp trailing edge. This cross sectional contour generally resembles that of a "high lift" aerofoil of an airplane.

The vanes of a cascade are preferably positioned between and secured to rails **2**, **3** to that the rails themselves, when in the bend with the leading edges **14** facing the flow of air in the duct at one side of the bend, and the trailing edges **15** extend in the direction of the flow of air in the duct at the other side of the bend. This is substantially the same arrangement where conventional vanes are used, such as in the patent cited hereinbefore, except that the

terminal portion of each vane along its trailing edge in the present instance may terminate at a point spaced outwardly of the longitudinal edge of each rail.

The cross sectional contour of the vane shown in FIG. 2 in itself is not new, having been illustrated and described in Reports and Memoranda, No. 1768, published Dec. 11, 1936, by the Ministry of Supply, Aeronautical Research Council, London, England, by Her Majesty's Stationery Office, the article being entitled "Some Experiments With Cascades of Aerofoils," and authored by A. R. Collar, B.A., B.Sc. of the Aerodynamics Dept., N.P.L. The description related to the contour of vanes of a cascade thereof positioned in a wind tunnel.

In the present invention, as already stated, each vane is formed from a single strip of sheet metal to the desired sectional contour shown in FIG. 2 and when so formed the longitudinally extending marginal portions of the strip along its free edges are on the rear wall **10** and said marginal portions are joined by a conventional lock seam **16** in which both marginal portions are folded on themselves in interengaging relation to each other so as to positively lock the marginal portions together against loosening or separating. This is distinguished from a mere lap seam in which one marginal portion is merely crimped over the other instead of being interlocked.

The rear wall **10** is formed with a tubular open ended passageway **17** extending thereacross parallel to seam **10** and spaced between the leading edge **14** and seam **16**. A passageway **18**, corresponding to passageway **17**, is between the trailing edge **15** and said seam **16**. These passageways are positioned so their open ends are in registration with the pairs of openings **4** in rails **2**, **3** when the vanes are positioned between the rails.

Passageways **17**, **18** are cylindrical sections of rear wall **10** that are formed therefrom by bending said sections to cylindrical shape so they are on the rear wall **10** of each vane in positions between walls **9**, **10**. Since the projecting seam **16** and passageways **17**, **18** are disposed to project into the space between the walls **9**, **10** they are out of the air stream, and the convex outer exposed side of rear wall **10** is flush or smooth so there is nothing to disturb the smooth flow of air thereacross.

In making up a cascade of double vanes, the latter are positioned between a pair of the rails **2**, **3** so the ends of the passageways are in registration with the desired holes **4**, and fasteners **19** preferably in the form of flat headed nails, are driven through holes **4** into the open ends of the passageways for tightly securing the vanes to the rails. The flat heads **20** of the nails will be positioned flat against the oppositely outwardly facing surfaces of the rails within the shallow recesses formed by the slanted marginal portions 5–8 of the rails. By this structure there will be no space between free edges of said marginal portions 5–8 and the walls of the air duct against which said rails are to be secured in the conventional manner.

The inside diameters of the passageways **17**, **18** are such that the shanks **21** of the nails or pins **19** will have a tight frictional fit within the passageways when the pins or nails are driven into the passageways.

By the structure described above, no dependence is placed on peened over portions of the sheet metal vanes for securing the vanes to the rails. When such portions are peened or bent over the sides of the slits in which they are fitted they frequently loosen or are broken and also the laborious time consuming step of peening over said portions is many times lengthened by resorting to the use of solder and soldering equipment where said portions are inadequate or insecure.

In the present instance the securement of the vanes to the rails is rapid, positive and permanent, and no portions of the rails project into the air stream between the pair of rails to affect the flow of air past the rails and vanes.

It is to be understood that certain features of the present invention are applicable to vanes of the conventional type

to overcome the difficulties heretofore existing in such vanes.

In the present structure it may be noted that the passageways **17**, **18** are spaced apart so they are adjacent to, but spaced from, the leading and trailing ends of the vane, which would preferably be their positions relative to any double vane in which the rear wall only is secured to the rails.

Although I have described my invention in specific terms, it will be understood that various changes may be made in size, shape, materials and arrangement without departing from the spirit and scope of the invention as defined in the appended claims.

I claim:

1. In a hollow turning vane for installation within the bend of an air duct, and which vane includes a front wall and a rear wall in spaced opposed relation having opposite edges joined to provide a leading edge adapted to face into an oncoming air stream flowing in one direction within said duct, and a trailing edge parallel with said leading edge adapted to face away from said stream, and said vane having opposite end edges extending between the corresponding ends of said leading and trailing edges over which the rails of a pair thereof are adapted to extend and to which said vanes are to be secured, the improvement that comprises:

(a) a pair of open ended passageways on one of said walls parallel with said leading and said trailing edges for receiving fasteners in their open ends in tight engagement with the sides of said passageways for securing said vanes to the rails adapted to extend over said end edges of said vane;

(b) said vane being formed from sheet material, and said passageways being positioned between said front and rear walls and being sections of said read wall bent to tubular form.

2. In a vane as defined in claim **1**:

(c) said vane being formed from a single sheet of material having two parallel opposite edges and bent on itself along a pair of spaced lines parallel with and spaced between said two parallel edges to define said leading and said trailing edges with the portion of said sheet between said pair of lines defining said front wall, and with the portions of said sheet at opposite outer sides of said pair of lines defining said rear wall; and,

(d) said last mentioned portions being connected with a locking seam in interlocking relation;

(e) said passageways being spaced at opposite sides of said seam.

3. In a vane as defined in claim **1**:

(c) said leading edge being convexly rounded and said trailing edge being relatively sharp, and

(d) said passageways being adjacent said leading and trailing ends, respectively.

4. An air guide for use within the bend of an air duct for guiding air past said bend comprising:

(a) a pair of elongated rails of sheet metal in the form of strips with one of their sides in spaced opposed relation to each other;

(b) a row of hollow vanes in spaced side by side relation extending between said sides with their ends against the latter;

(c) said vanes being flat strips of sheet metal substantially correspondingly bowed in one dimension to provide a concave air deflecting surface on one side of each vane when said guide is within the bend of an air duct;

(d) means rigid with each of said vanes positioned at the side thereof opposite to said concave surface, forming an open ended passageway extending normal to the dimension in which said vane is bowed, and having their open ends adjacent to said rails respectively;

(e) fasteners extending through said rails and into said open ended passageways in firm frictional engagement with the sides of the latter, and said fasteners having heads in tight engagement with the oppositely outwardly facing sides of said pair of rails for firmly holding said rails and vanes together,

(f) each of said vanes including an extension integral therewith and rigid relative thereto arcuately extending across the side of each vane that is opposite to said concave surface in spaced relation to said vane;

(g) said passageways being integral with said extension and rigid therewith and disposed between said extension and said vane;

(h) said vane including said extension and said passageways being formed from a single sheet of metal of uniform length equal to the space between said rails, and having an aerofoil cross sectional contour in a plane parallel with said rails generally corresponding to the cross sectional contour of a high lift airplane wing providing a rounded relatively blunt edge along one pair of the corresponding longitudinally extending edges of said rails, and a sharp edge along the other pair of corresponding edges of said rails.

5. In an air guide as defined in claim **4**:

(f) said rails being formed as to provide oppositely outwardly opening recesses at the oppositely outwardly facing sides of said pair of rails within the outlines of the oppositely outwardly projected confines of said rails in which said heads on said fasteners are positioned.

6. In a vane assembly for use within the bend in an air duct, including a hollow turning vane having a front wall and a rear wall in spaced opposed relation having opposite edges joined to provide a leading edge adapted to face into an oncoming air stream flowing in one direction within said duct, and a trailing edge parallel with said leading edge adapted to face away from said stream, and said vanes having opposite ends at the ends of said leading and trailing edges, the improvement comprising:

(a) a pair of parallel open ended passageways integral with one of said walls and positioned between said rear and said front wall, spaced a substantial distance apart, each of said passageways being sections of said one of said walls bent to tubular form extending between said opposite ends parallel with said trailing and said leading edges,

(b) vane supporting means extending across said opposite ends of said vane formed with openings in register with the open ends of said passageways, and fasteners respectively extending through said openings into said passageways in tight engagement with the walls of the latter at said open ends securing said vane to said vane supporting means.

References Cited

UNITED STATES PATENTS

2,297,979	10/1942	Peck	138—39
2,359,579	10/1944	Peck	138—37
2,819,732	1/1958	Paetz	138—46
2,861,597	11/1958	Gracer	138—39
2,884,956	5/1959	Perlin	138—39
2,980,340	4/1961	McEachern	138—37 X

LAVERNE D. GEIGER, *Primary Examiner.*

C. L. HOUCK, *Assistant Examiner.*