April 16, 1968 L. MAGERS, JR 3,377,757

PRESTRESSED STRUCTURE

Filed May 12, 1965 2 Sheets-Sheet 1

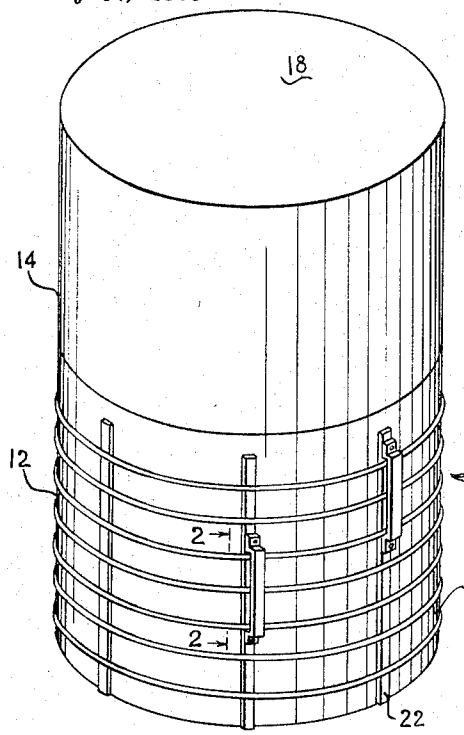


FIG. 1.

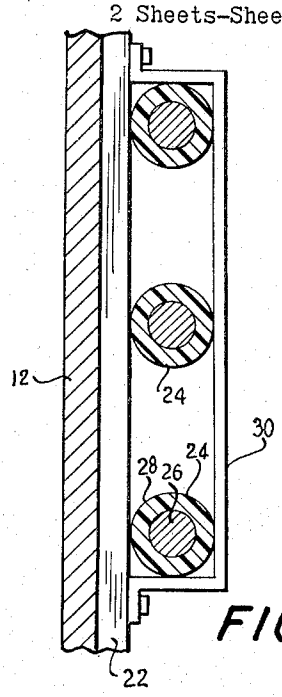


FIG. 2.

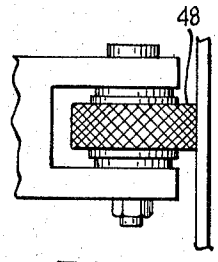


FIG. 5.

FIG. 3.

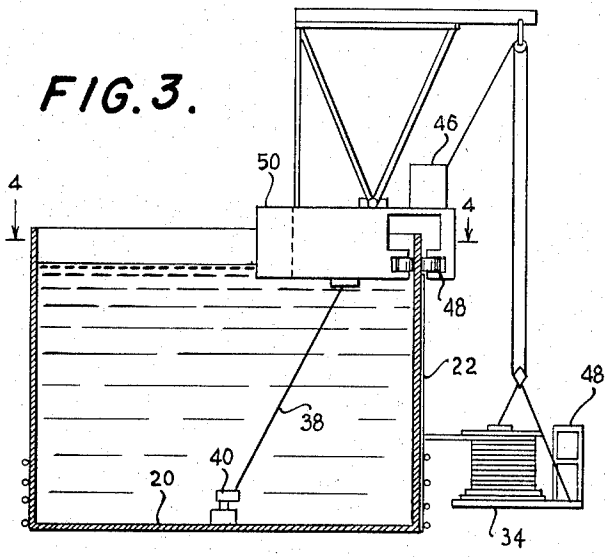


INVENTOR
LEROY MAGERS JR

BY Curtis, Morris & Safford
ATTORNEYS

PRESTRESSED STRUCTURE

Filed May 12, 1965 2 Sheets-Sheet 2

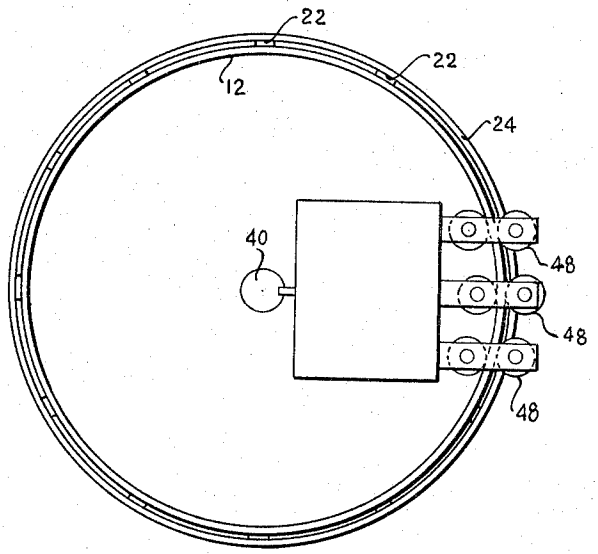


FIG. 4.

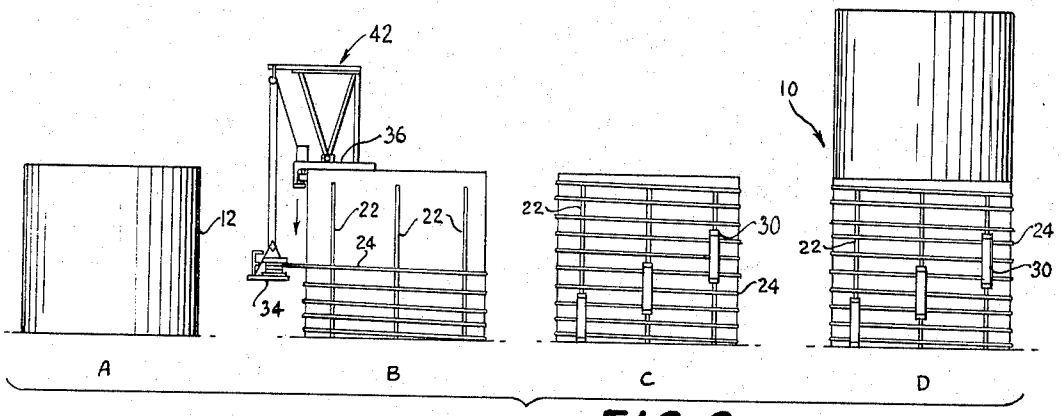


FIG. 6.

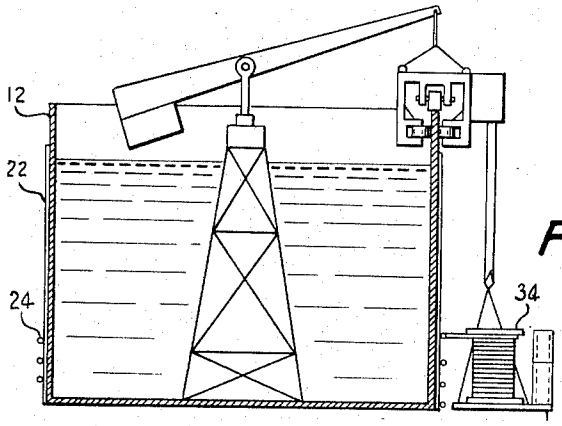


FIG. 7.

INVENTOR
LEROY MAGERS JR
BY
Curtis, Morris & Safford
ATTORNEYS

United States Patent Office

3,377,757

Patented Apr. 16, 1968

1

# 3,377,757
# PRESTRESSED STRUCTURE

Leroy Magers, Jr., West Caldwell, N.J., assignor to The Preload Company, Westbury, N.Y.

Continuation-in-part of application Ser. No. 98,954 Mar. 28, 1961. This application May 12, 1965, Ser. No. 455,118

The portion of the term of the patent subsequent to Mar. 22, 1983, has been disclaimed

7 Claims. (Cl. 52—224)

This invention relates to improved prestressed structures, and in particular, to the protection of the tendons used to prestress the structures; it is also a continuation-in-part of my copending application Ser. No. 98,954, filed Mar. 28, 1961, now U.S. Patent No. 3,241,278, issued Mar. 22, 1966.

Prestressed structures are generally made of concrete and are widely used for various purposes, including storage tanks, silos, reinforcing rings for dome top roofs, and other substantially cylindrical structures. With concrete structures, a thick and rigid core wall of concrete is usually first prestressed by high tensile strength steel tendons and thereafter the tendons are normally covered with a cement mortar coating for some corrosion protection. However, in my copending application the necessity of this cover coating has been eliminated.

Heretofore, as far as I know, it has not been practical to prestress steel tanks and provide the standard corrosion protection by using a cement mortar coating.

Also, the thinness of the side wall of a steel tank (compared to that of a concrete tank) coupled with the usual large diameter of the tank, presented the problem of economically preventing the tank side wall from buckling while it is prestressed.

The advantages of prestressing steel tanks are many. For example, with the ability to prestress steel tanks, it is possible to enlarge the capacity of an existing tank by merely adding an upper addition to it. In many existing steel tank facilities, such as tank farms, additional land is not available to furnish the necessary new area for ground level tanks. Consequently, heretofore expansion of existing farms has not been practical and often impossible.

Accordingly, it is an object of the present invention to provide a prestressed thin side wall steel tank. Further, it is an object to provide a prestressed steel tank in which the tendons are protected from corrosion by preformed means. It is another object to provide a method of prestressing steel tanks having relatively thin side walls without the necessity of using elaborate and costly interior bracing to prevent buckling of the thin walls during the prestressing operations.

It is also an object to provide a tank construction which remains stable under the prestressing load when the tank is empty.

An example of the present invention is disclosed herein and in the accompanying drawings. While the illustrated embodiment is described in detail, it is to be understood that the particular structure and method disclosed are intended as examples for those skilled in the art so that they may understand and appreciate fully the features and advantages of the inventions. However, the illustrated embodiment and described method should not be considered as limiting the scope and spirit of the invention which are defined in the appended claims.

In the drawings:

FIGURE 1 is a perspective view of a steel tank in accordance with the present invention;

FIGURE 2 is an enlarged sectional view of the tank of FIGURE 1 along lines 2—2;

FIGURE 3 is a partially sectional view of a tank being prestressed in accordance with the present invention;

2

FIGURE 4 is a plan view of a tank of FIGURE 3 along lines 4—4;

FIGURE 5 is fragmentary detail of a roller arrangement of the support apparatus of FIGURES 3 and 4;

FIGURE 6 is a series of schematic views showing the various stages in prestressing an existing tank to permit enlargement of it; and

FIGURE 7 is a schematic sectional view of an alternate winding arrangement.

Referring to the drawings and to FIGURE 1 in particular, a prestressed tank **10**, in accordance with the present invention, is shown. The tank **10** is preferably made of steel plate and the specification for the steel will generally be determined by the condition to be encountered by the tank during use. In general, the steel plate will be in accordance with prevailing A.S.T.M. standards.

The steel plate may be joined together by any suitable means such as welding, riveting, or bolting, using suitable gasketing material where necessary when bolting is used.

The tank **10** includes a lower portion **12** and an upper portion **14**, both the lower and upper portion having cylindrical side walls **16**. A top or dome **18** is joined by any well known means to the upper portion **14** and a bottom wall **20** is affixed to the lower portion **12**.

In the illustrated tank **10**, a series of vertical ribs **22**, which are also made of steel, are fastened to the side wall **16** of the tank **10** by welding, riveting or bolting and serve as support means. About the side wall **16** and over the vertical ribs **22**, a series of preformed plastic coated tendons **24** are wound under tension. As the tendons **24** are applied, they are stressed and elongated a desired amount so that the side wall **16** is placed in compression and accordingly, prestressed.

The tendons **24** are advantageously comprised of a high tensile strength steel core **26** and a protective plastic outer coating or covering **28**. The steel core is preferably made of high tensile steel which may be safely used with a working tensile stress of about 150,000 p.s.i. although the usual stress developed in the core **26** will not generally be greater than about 90,000 to 120,000 p.s.i. The plastic coating **28** may be of any suitable plastic material so long as it is flexible, scuff and abrasive resistant, substantially chemically inert and of sufficient thickness so that it will not extrude when the tensile strength and elongation desired in the core is developed.

The plastic coating **28** preferably will be applied about the steel core before the tendon is wrapped about the side wall **16**. An organic plastic coating, such as high density polyethylene, approximately 50 mils thick before prestressing, is suitable. As a minimum thickness about 8 to 10 mils of polyethylene should remain enveloping the steel core **26** and between the outer surface of the wall **16** and the core **26** after the tendon has been stressed and elongated the desired amount.

Desirably, the vertical ribs **22** have a minimum thickness of about a quarter of an inch with beveled or rounded sides. The beveled or rounded sides insure that there will be a minimum of shearing action against the plastic coating when the tendons are tensioned.

Advantageously, a series of clips **20** are provided for positioning the tendons against the ribs **22** and the side wall **16** of the tank. The use of the clips **30** and the vertical ribs **22** helps to prevent the side wall **16** from being buckled inwardly during prestressing operations. A cylindrical wall, even though of minimal thickness, will not buckle so long as it is attached to the element which is creating the compression. Accordingly, the use of the ribs **22** and the clips **30** to hold the tendons **24** in place insures that the cylindrical configuration of the tank side wall will be maintained.

The clips **30** may be fastened to the ribs **22** by any suitable means, such as bolting, welding or riveting. In

actual practice welding will normally be the most economical procedure to use.

After the lower portion **12** of the tank **10** is in place and prestressed, the upper portion **14** may be added as a conventional extension. The upper portion **14** need not be prestressed unless it is desired to increase the load carrying capacity of the upper portion.

The present invention permits a tank consisting originally only of a lower portion **12** to be reinforced by prestressing so that a new upper portion **14** may be added to it. As far as it is known, this was not possible to do heretofore.

To prestress the lower portion **12** of the tank **10**, any suitable prestressing equipment may be used. Such equipment is shown in U.S. Patent No. 2,385,796 issued Oct. 2, 1949, and U.S. Patent No. 2,858,084 issued Oct. 28, 1959.

In prestressing the lower portion **12**, it is usually necessary that the thin steel plate of side wall **16** be properly braced internally to withstand the force developed by the prestressing apparatus and the applied tendons. In order to accomplish this (as shown in FIGURE 3) the tank is filled with a suitable liquid L, usually water. The prestressing apparatus **34** is suspended from a buoyant platform **36** which floats in the liquid L and serves as a positioning carriage. The platform **36** is anchored by a cable **38** to a suitable swivel **40** usually centrally located on the bottom wall **20** of the tank. The apparatus may be of any type as stated heretofore, but in the illustrated embodiment, it comprises a framework **42** mounted on the buoyant platform **36** with a pulley and cable system **44** used to raise and lower the prestressing mechanism **34**.

The pulley and cable system **44** may be activated by any suitable means, such as the motor arrangement **46**.

The prestressing apparatus **34** has its own independent driving motor and gear arrangement **47**. The driving motor **47** propels the apparatus **34** about the tank by means of an endless annulus member **45**, which may be of any suitable construction such as a chain or cable. The apparatus **34** rides on the annulus **45** and the motor through a gear or drum system pulls the apparatus on the annulus. The apparatus **34**, as it is pulled about the tank, tensions the tendons **24** to the desired amount by actually elongating the steel core **26** and the plastic coating **28**.

The platform **36** is advantageously provided with spaced rollers **48** which are positioned in mating relationship on each side of the side wall **16**. The rollers preferably have a resilient covering of any suitable material such as rubber and thereby prevent damage to the side walls during the prestressing operation.

The buoyant platform **36** may, if necessary, be fixed with a counter weight **50** to prevent overturning of the platform during the prestressing operation.

In FIGURE 6, four stages of operation in carrying out the method of the present invention are shown. In FIGURE 6A a steel tank which is not prestressed is shown. In FIGURE 6B the second step in carrying out the method is illustrated. Therein the vertical ribs **22** are shown in place and the prestressing apparatus and the buoyant platform are shown in operation applying the tendons **24** to the tank in a series of continuous convolutions.

In FIGURE 6B it will be noted that the lower portion **12** of the tank **10** is partially filled with water to the indicated liquid level L. By increment filling of the tank during the prestressing operation, internal support is provided until the complete prestressing is finished.

In FIGURE 6C the tank is shown with the prestressing operation completed and the apparatus and buoyant platform removed.

In FIGURE 6D a completed tank with a prestressed lower portion **12** and an unprestressed upper portion **14** is illustrated.

Comparing FIGURES 6A and 6D, it will be noted that the tank capacity has been doubled without any additional surface area being required. This clearly demonstrates the advantages of using prestressed steel tanks.



The use of a plastic coated tendon about the steel tank insures that the tendon will not be exposed to corrosion forces and, in addition, will be protected from any deteriorating gases or materials which may be found in the environment about the tank. The vertical ribs **22**, in addition to serving as reinforcements for the tendon clips **30**, also hold off the tendons so that adequate painting or treatment of the steel surfaces of the side wall **16** is possible, particularly in the areas adjacent to the ribs **22**.

In FIGURE 7 an alternate construction for supporting the prestressing apparatus **34** is shown. As shown therein, a positioning carriage **52** having a frame **54** serves as the platform for the spaced rollers **48** and the motor **46** of the pulley and cable system **44**. The frame **44** is, in turn, supported by a cantilevered and counter balanced crane structure **56** which is rotatably mounted on a temporary, but stationary, tower structure **58**.

In addition, plastic covered cables may be used as the tendons and a jacking method such as that disclosed in U.S. Patent No. 3,123,942 may be used in place of the wire winding apparatus.

From the foregoing it is believed obvious that the present invention fulfills all the aforesaid objects and advantages as well as those which are apparent from the description of the apparatus and method.

What is claimed is:

**1.** A substantially cylindrical prestressed metal structure comprising an annular substantially cylindrical sidewall, a series of convolutions of tendons having high tensile strength steel cores wrapped about the outer surface of the wall under substantial tension, said tendons elongated a desired amount to develop a predetermined tensile stress therein whereby the sidewall is prestressed and circumferentially compressed by the force exerted by the elongated tendons, said tendons including a preformed flexible and scuff and abrasive resistant plastic coating completely enveloping the core of each tendon and applied thereon before said tendons are wrapped and elongated about the sidewall, a portion of said plastic coating being positioned between the outer surface of the sidewall and the steel cores of the tendons, said plastic material of sufficient thickness and possessing sufficient resistance to extrusion to resist the radial force developed by the tensioned tendon whereby the tendon remains enveloped in the plastic coating under said radial force, and a plurality of clip members overlying the tendons and joined to the sidewall to hold the tendons in position and close contact with the sidewall whereby the cylindrical configuration of the sidewall may be maintained.

**2.** A substantially cylindrical prestressed metal structure as defined in claim **1** wherein the thickness of the plastic between the core of the tendon and the outer surface of the wall when the tendon is stressed and elongated the desired amount is about at least 8 mils.

**3.** A substantially cylindrical prestressed metal structure as defined in claim **1** wherein the plastic material is polyethylene.

**4.** A substantially cylindrical prestressed metal structure as defined in claim **1** and further including a plurality of substantially vertical support members mounted on the outer surface of the wall and between the wall and the tendons, at least some of the clip members affixed to at least some of the support members.

**5.** A substantially cylindrical prestressed structure comprising an annular substantially cylindrical steel sidewall, a series of convolutions of tendons having high tensile strength steel cores wrapped about the outer surface of the wall under substantial tension, said tendons elongated a desired amount to develop a predetermined tensile stress therein whereby the sidewall is prestressed and circumferentially compressed by the force exerted by the longated tendons, said tendons further including a pre-

formed flexible and scuff and abrasive resistant plastic coating completely enveloping the core of each tendon and applied thereon before said tendons are wrapped and elongated about the sidewall, a portion of said plastic coating being positioned between the outer surface of the sidewall and the steel cores of the tendons, a plurality of substantially vertical support members mounted on the outer surface of the wall and between the wall and the tendons, a plurality of clip members overlying the tendons and at least some of said clip members attached to the support members.

6. The method of constructing a prestressed steel tank sidewall including the steps of constructing a substantially water tight cylindrical sidewall, filling the interior of the formed sidewall with a liquid whereby the sidewall is internally supported, wrapping a plurality of preformed convolutions of high tensile strength tendons about the sidewall, said tendons comprised of an abrasive and scuff resistant plastic outer coating surrounding an inner steel core, elongating the tendons a desired amount whereby the sidewall is placed in compression, and removing the liquid from within the sidewall so that the sidewall is unsupported internally.



7. The method of constructing a prestressed steel tank sidewall as defined in claim 6, and further including the step of mounting a prestressing unit for tensioning the tendons on a free moving buoyant platform set in the liquid within the sidewall.


**References Cited**

UNITED STATES PATENTS

| | | | |
|---|---|---|---|
| 2,858,992 | 11/1958 | Wentz | 29—452 |
| 881,584 | 3/1908 | Hoffman | 220—71 |
| 2,355,874 | 8/1944 | Laird | 29—431 |
| 2,381,396 | 8/1945 | Kuhn | 220—71 X |
| 2,382,171 | 8/1945 | Pomykala | 50—129 X |
| 2,520,403 | 8/1950 | Hirsh | 29—452 |
| 2,633,629 | 4/1953 | Crookston | 29—452 |
| 3,025,992 | 3/1962 | Humphrey | 29—452 |
| 3,146,549 | 9/1964 | James | 50—129 |


HENRY C. SUTHERLAND, *Primary Examiner.*

JAMES L. RIDGILL, JR., *Assistant Examiner.*