April 2, 1968 L. K. MOORE 3,375,785

WIRE-LINE ACTUATED TIME-DELAY DETONATOR APPARATUS

Filed July 29, 1966 3 Sheets-Sheet 1

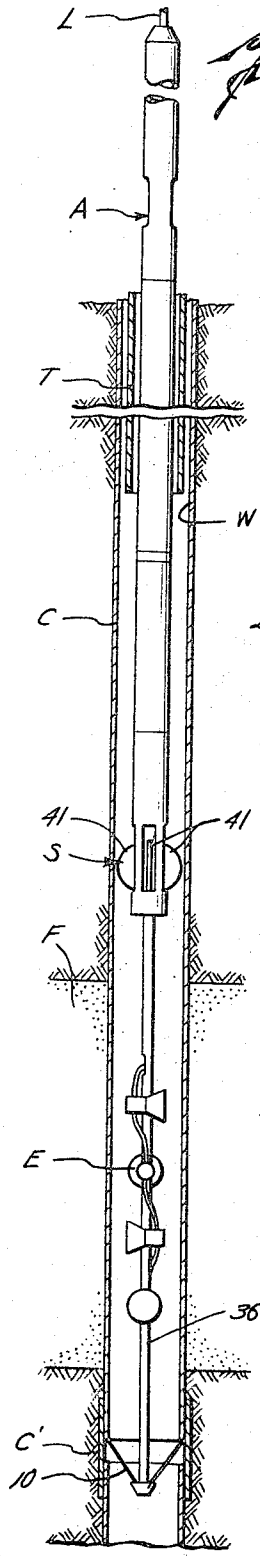

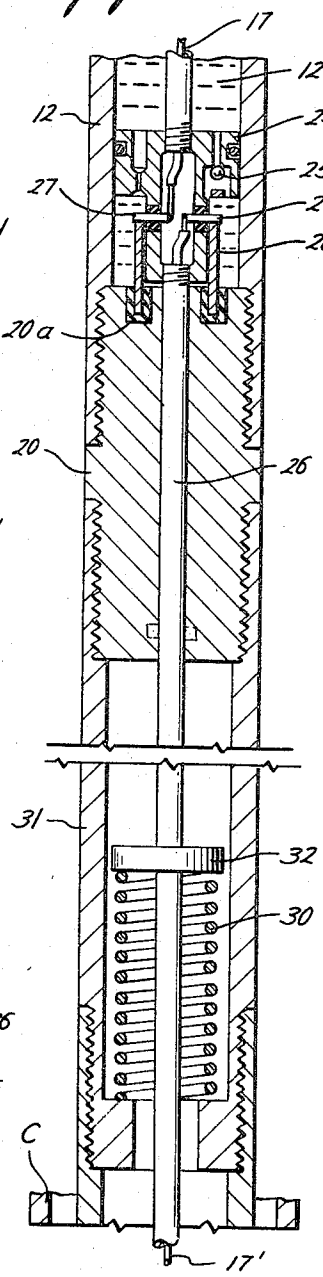

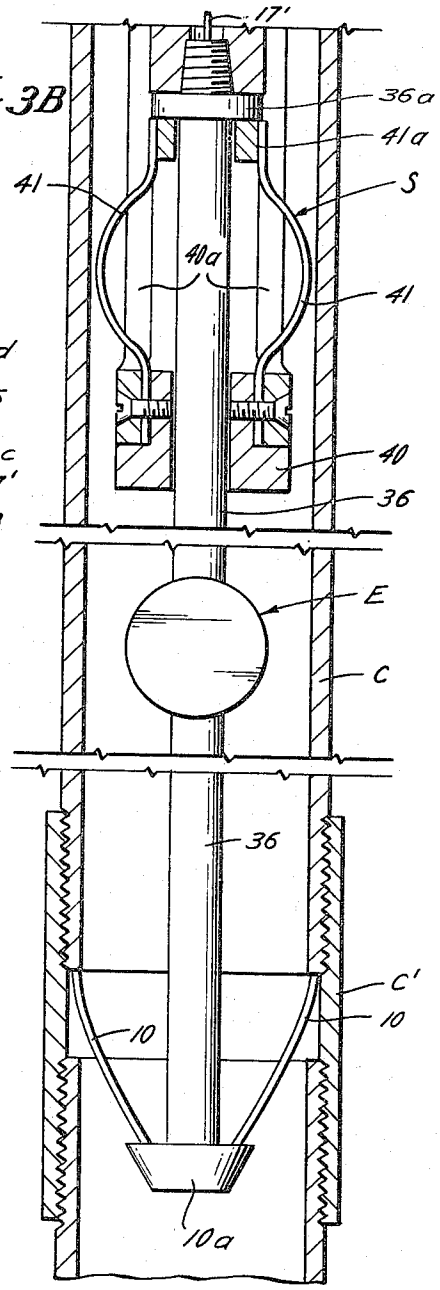

Lawrence K. Moore
INVENTOR.

BY Hayden & Pravel
ATTORNEYS

April 2, 1968 L. K. MOORE 3,375,785

WIRE-LINE ACTUATED TIME-DELAY DETONATOR APPARATUS

Filed July 29, 1966 3 Sheets-Sheet 2

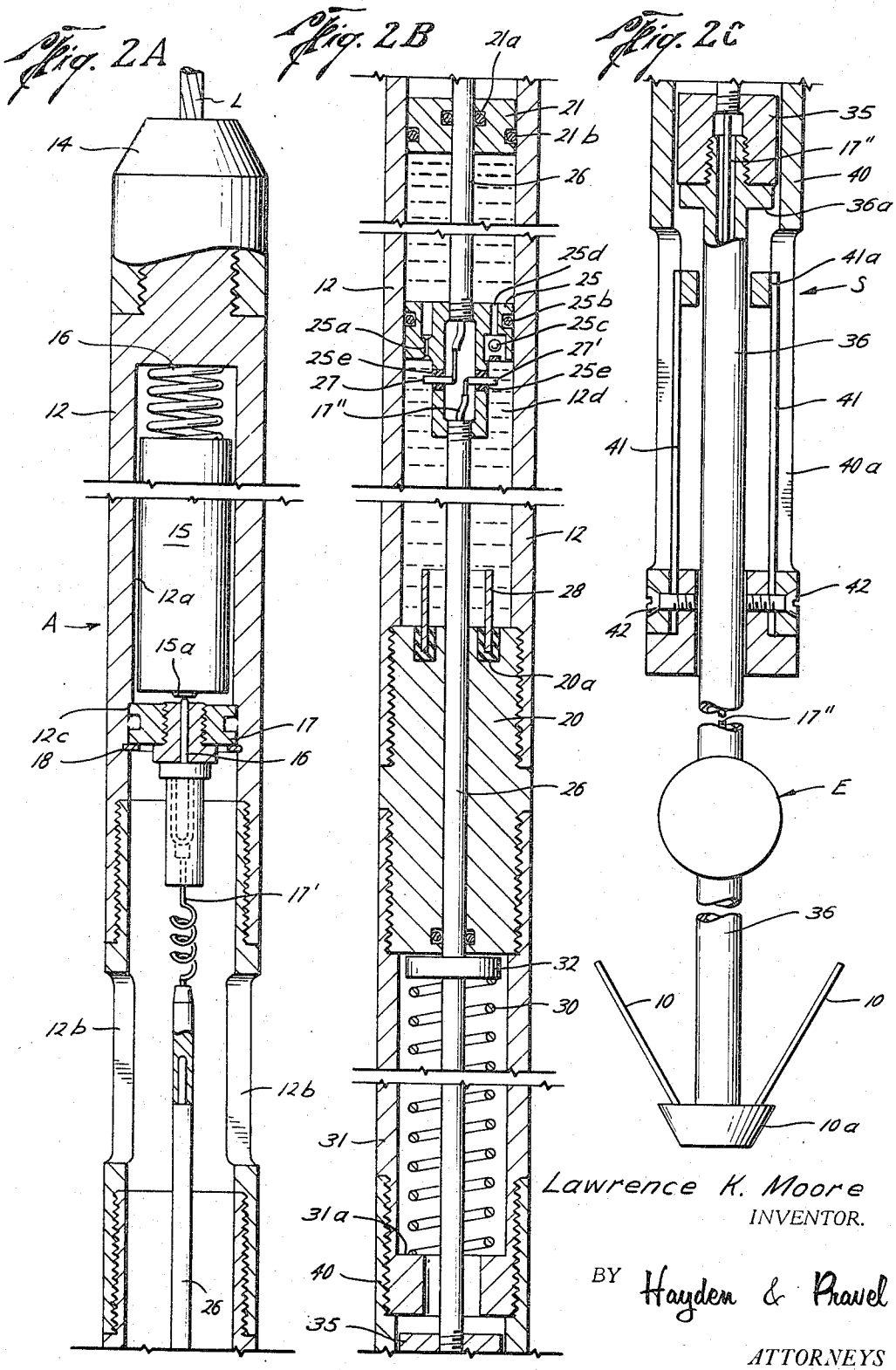

Lawrence K. Moore
INVENTOR.

BY Hayden & Pravel
ATTORNEYS

April 2, 1968 L. K. MOORE 3,375,785

WIRE-LINE ACTUATED TIME-DELAY DETONATOR APPARATUS

Filed July 29, 1966 3 Sheets-Sheet 3

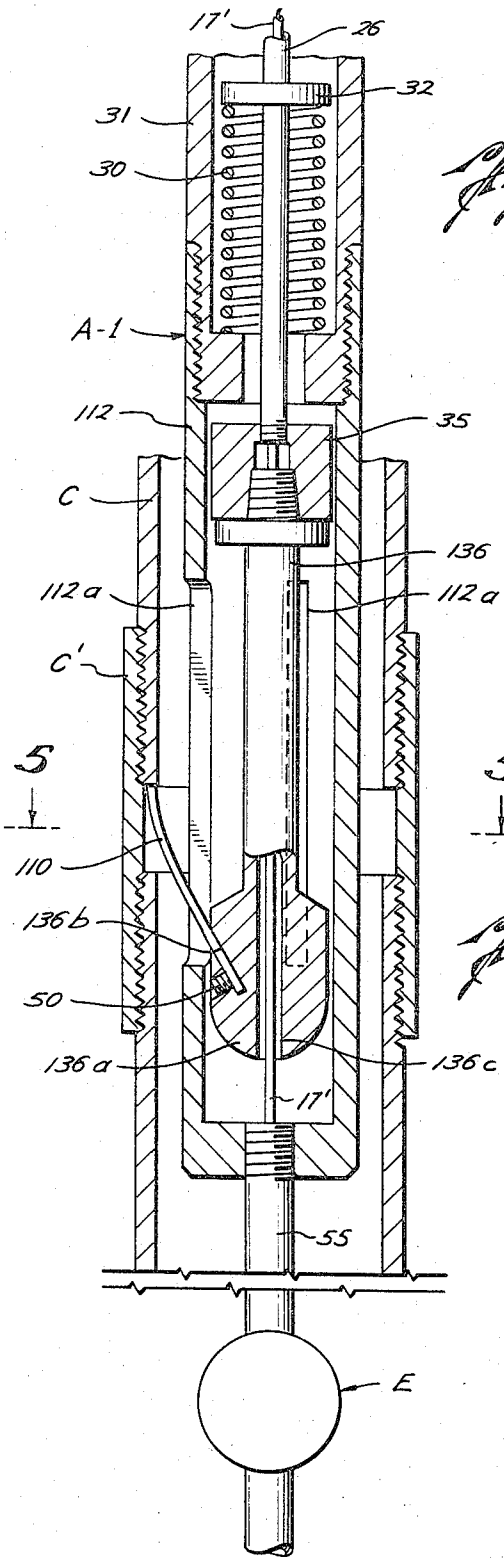

Fig. 4

Fig. 5

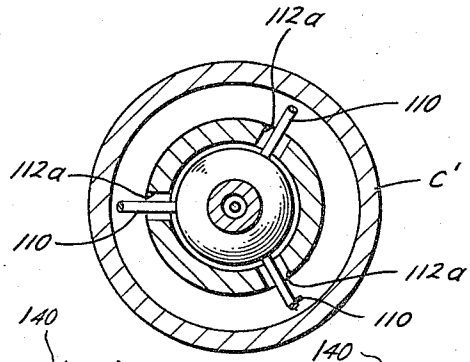

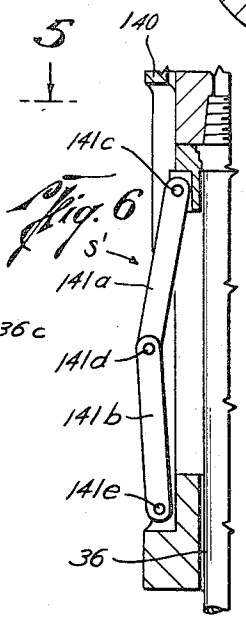

Fig. 6

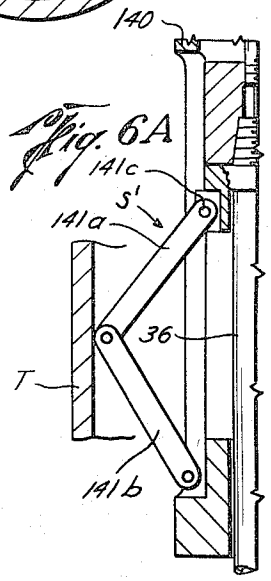

Fig. 6A

Lawrence K. Moore
INVENTOR.

BY Hayden & Pravel

ATTORNEYS

United States Patent Office

3,375,785

Patented Apr. 2, 1968

1

3,375,785
WIRE-LINE ACTUATED TIME-DELAY DETONATOR APPARATUS

Lawrence K. Moore, 3716 Ingold St., Houston, Tex. 77005

Filed July 29, 1966, Ser. No. 573,155
14 Claims. (Cl. 102—20)

ABSTRACT OF THE DISCLOSURE

A time delay apparatus for use with a detonator or the like wherein a housing is supported by a wireline and the time delay mechanism is carried by an inner mandrel disposed in the housing and supported resiliently thereof. A safety mechanism is also provided which prevents actuation of the time delay device until the explosive is at the proper location in the well for firing.

In United States Patent No, 3,180,261 and United States patent application, Ser. No. 448,652, now Patent No. 3,285,171, wire-line actuated time-delay detonator apparatus is disclosed. The present invention relates to apparatus which is an improvement on the apparatus of said Patent No. 3,180,261 and said patent application Ser. No. 448,652 now Patent No. 3,285,171.

An object of this invention is to provide a new and improved wire-line actuated time-delay detonator apparatus wherein the wire-line for manipulating the apparatus is connected to the outer housing thereof, and wherein a time delay mechanism is carried on an inner mandrel disposed in the outer housing and supported resiliently thereof.

Another object of this invention is to provide a new and improved wire-line actuated time-delay apparatus wherein a fluid time-delay means is provided therewith wherein fluid is transferred through a restriction from one chamber to a second chamber without requiring an expansion of the wall of the second chamber to which the fluid is transferred.

A further object of this invention is to provide a new and improved wire-line actuated time-delay device having means therewith to prevent actuation thereof for firing until the explosive suspended from the apparatus is in pipe or casing of a predetermined minimum diameter.

Still another object of this invention is to provide a new and improved wire-line actuated time-delay apparatus wherein the wire-line supports the outer housing and any tool connected therebelow, and wherein an inlet mandrel having a time-delay piston thereon is supported by the housing so that none of the weight of the housing or tool therebelow is carried by the inner mandrel, whereby a relatively heavy tool may be supported without danger of inadvertent operation of the time-delay piston.

The preferred embodiment of this invention will be described hereinafter, together with other features thereof, and additional objects will become evident from such description.

The invention will be more readily understood from a reading of the following specification and by reference to the accompanying drawings forming a part thereof, wherein an example of the invention is shown, and wherein:

FIG. 1 is a view, partly in elevation and partly in section, illustrating one embodiment of the apparatus of this invention;

FIGS. 2A, 2B and 2C are vertical sectional views, partly in elevation, illustrating the upper, intermediate and lower sections, respectively of the embodiment of this invention illustrated in FIG. 1;

FIGS. 3A and 3B are vertical sectional views, partly

2

in elevation, illustrating the intermediate and lower portions of the apparatus illustrated in FIGS. 1 and 2A, 2B and 2C, but in a firing position;

FIG. 4 is a vertical sectional view, partly in elevation, illustrating the intermediate and lower portions of a modified embodiment of the apparatus of the present invention;

FIG. 5 is a sectional view taken on line 5—5 of FIG. 4 to further illustrate the invention;

FIG. 6 is a partial sectional view illustrating a modified safety device in the retracted position; and

FIG. 6A is a view similar to FIG. 6 but illustrating the safety device in an expanded position.

In the drawings, the letter A designates generally the apparatus of this invention which is adapted to be lowered into a well bore W which normally has well tubing T and well casing C therein. The apparatus A is adapted to be lowered and manipulated by a wire-line L which extends to the surface of the well. Such line L is known in the trade as a slick line since it is not an electrical line under normal conditions. As will be more fully explained, the apparatus A is adapted to be lowered into the well pipe or casing C and when it has been positioned at a predetermined part of such casing C by the anchoring of latch fingers **10** in a collar C′ or other internal recess in the casing C, an explosive means E is detonated or fired after an appropriate time-delay. By reason of the time-delay, it is possible to pull the entire apparatus A from the casing C by releasing the latch fingers **10** with an upward pull of the line L and prior to firing the explosive E. Also, as will be explained more fully hereinafter, in the form of the invention illustrated in FIGS. 1–3B, a safety mechanism S is included as a part of the apparatus A for preventing the firing of the explosive means E until such safety mechanism S and the explosive E therebelow are in the casing C or other well pipe of a minimum predetermined diameter.

Considering the invention more in detail, and with particular reference to FIGS. 2A, 2B and 2C, the apparatus A includes an outer housing **12** which is actually made in a plurality of parts as illustrated in the drawings. A rope socket or connector **14** is threaded or otherwise connected to the housing **12** for connecting the slick wire line L to to the apparatus A through the housing **12**.

Within the upper portion of the housing **12**, there is a battery chamber **12*a*** for receiving one or more batteries **15** preferably of the dry cell type. A coil spring **16** or other suitable resilient means is preferably provided to urge the battery contact **15*a*** at the lower end of the lowermost battery **15** into electrical contact with a plug contact **16** which establishes electrical contact with an electrical conductor or wire **17** extending down through the housing **12**, as will be further explained.

Openings **12*b*** are provided in the housing **12** to facilitate access to plug **16** for connecting and disconnecting the wire **17** as desired. The plug **16** is preferably held in place by a ring **17** which is positioned in abutment with a shoulder **12*c*** and is held in such position by a removable snap ring **18** or other suitable holding means.

A fluid chamber **12*d*** (FIG. 2B) is provided in the housing **12** above a connector **20** and below a floating seal at **21**.

The fluid chamber **12*d*** is provided to hold a fluid such as silicone oil in which a time-delay piston **25** is adapted to move. The time-delay piston **25** is mounted on and moves with an inner mandrel at **26** which extends above and below the piston or seal **25**. It is to be noted that at the upper end of the inner mandrel **26** (FIG. 2A), the wire **17** is looped or coiled so as to permit an elongation, of such wire **17** during relative movement of the housing **12** with respect to the mandrel **26** as will be more fully explained. The wire **17** actually extends

downwardly through the inner mandrel **26** and terminates at an electrical contact at **27** carried below the piston **25**. Another electrical contact **27'** is carried by the piston **25** and is spaced from the electrical contact **27** so that the two contacts **27** and **27'** do not engage each other. A continuation of the wire **17** is indicated at **17'** and it is electrically connected to the electrical contact **27'** and extends downwardly through the lower portion of the inner mandrel **26** and ultimately is connected to the explosive means E, which in the form of the invention illustrated in FIG. 1 and FIG. 2C are shaped perforator charges. The wire **17'** is thus electrically separated from the wire **17** just below the piston **25**, but when the contacts **27** and **27'** engage an annular electrical conductor or contact ring at **28**, then the circuit from the wire **17** to the wire **17'** is completed. It is to be noted that the contact ring at **26** is mounted in an electrical non-conductor ring **20***a* mounted in the connector **20** so as to insulate the conductor ring **28** from the conductor metal of the connector **20**. This prevents the wires **17** and **17'** from being "shorted" when the contact is made between the contacts **27** and **27'** and the ring **28**, since the housing **12** and the body of the apparatus A are used for the other side of the electrical circuit leading to the explosive means E.

The floating piston or seal **21** has an inner O-ring **21***a* and sealing engagement with the external surface of the inner mandrel **26**, and an external O-ring **21***b* in engagement with the inner wall of the housing **12**.

The piston **25** is provided with a restriction or orifice **25***a* of a predetermined size through which fluid may flow when the housing **12** is moved upwardly with respect to the piston **25**. It is to be noted that an annular O-ring **25***b* or other suitable seal is provided between the piston **25** and the inner surface or wall of the housing **12** so that fluid must flow through such restriction **25** when there is an upward movement of the housing **12** with respect to the piston **25**. A one way check valve at **25***c* is indicated in the piston **25**, such valve being closed when the housing **12** moves with respect to the piston **25** and being open upon a movement of the housing downwardly with respect to the piston **25**. When the check valve **25***c* is open, fluid may flow more rapidly through the enlarged opening **25***d* from the portion of the chamber **12***d* above the piston **25** to the portion of such chamber **12***d* below the piston **25**. The ball of the check valve **25***c* may be held in a raised or closed position to close the flow through the passage **25***d* by means of a spring if so desired, although a spring is not essential and is therefore not illustrated in the drawings. By reason of the restriction **25***a* in the piston **25**, a time-delay is provided when the housing is being pulled upwardly to move the ring **28** upwardly into contact with the electrical contacts **27** and **27'**. As will be understood, such time-delay is caused by a restraint to the flow of the fluid through the restricted opening **25***a* as it moves from the lower portion of the chamber **12***d* to the upper portion thereof above the piston **25**. It is important to note that the presence of the inner mandrel **26** both above and below the piston **25** avoids a change in the volume as the piston **25** moves longitudinally with respect to the housing **12**. Therefore, the piston **21** does not actually expand or move upwardly during the travel of the piston **25** but instead it merely floats in substantially the same position during the travel of the piston **25**.

It is to be noted that the contacts **27** and **27'** are mounted in insulation or electrical non-conductor material **25***e* to prevent the contacts **27** and **27'** from becoming shorted out through the metal conductor material of the piston **25**.

When the electrical contacts **27** and **27'** engage the electrical contact ring **28**, as will be more fully described hereinafter, the electrical circuit is completed through the wire **17**, the contacts **27** and **27'**, the ring **28** and the lower wire **17'** down to the explosive means E. The other side of the electrical circuit is grounded through the housing **12** from the battery **15** and thus the circuit is electrically completed to the explosive means E upon the engagement of the contacts **27** and **27'** with the electrical contact **28**.

During the normal running in of the apparatus A on the wire line L, the mandrel **26** is supported in the inactive or upper position of FIG. 2B by means of an internally disposed spring **30** which is positioned within a spring housing **31** connected below the coupling **20** and forming an extension of the housing **12**. The spring **30** engages a flange or disk **32** which is a part of or is secured to the inner mandrel **26**. The lower end of the spring **30** rests upon an internal shoulder **31***a* within the spring housing **31** so that upon an upward longitudinal movement of the housing **12** and the spring housing **31** therewith relative to the mandrel **26**, the spring **30** is compressed and it therefore serves as a returning force to return the piston **25** back to the upper or inactive position after the relative upward force on the housing **12** is relieved, as will be more evident hereinafter.

The inner mandrel **26** is held against upward travel during the raising of the housing **12** by latch fingers **10** which are preferably disposed below or in the vicinity of the explosive means E. Such latch fingers **10** are flexible wires which extend upwardly and outwardly so as to project into a collar or recess C' (FIG. 1) upon an upward movement of the apparatus A by lifting with the wire line L. Such latch fingers **10** may be connected to the inner mandrel **26** by any suitable means, but as illustrated in the drawings, the lower end of the mandrel **26** is provided with a box type connector **35** which is threaded to the lower end of the mandrel **26** and which also is threaded to a support tube **36** extending down to the explosive means E and ultimately to the support head **10***a* for the latch fingers **10***a*.

In the preferred form of the invention, a safety mechanism S (FIGS. 1, 2C and 3B) is connected below the spring housing **31**. Such safety mechanism includes a safety body **40** which is threaded to or is otherwise connected to the lower end of the spring housing **31** so as to form a continuation thereof and also a continuation of the housing **12**. The safety housing **40** has a plurality of longitudinal slots **40***a* formed in the wall thereof, preferably three in number. A plurality of laterally extensible stop elements **41**, each of which is shown as a leaf spring, is attached to the body **40** by means of screws **42** or other suitable attaching means. Such stop elements **41** are attached only at the lower end thereof, while their upper ends **41***a* are free from any connection to the housing **40** or any other part of the apparatus. The upper ends **41***a* of the elements **41** are spaced below an annular shoulder **36***a* which is preferably formed on the tubular support **36**, although such upper ends **41***a* may be in contact with the shoulder or abutment means **36***a* at all times if desired.

In any event, upon an upward movement of the housing **12** by pulling upwardly on the wire line L after the latch fingers **10** engage in a collar C', the upper ends **41***a* are brought into engagement with the shoulder **36***a* if they are not already in such engagement, and continued upward movement of the housing **12** with respect to the inner mandrel **26** causes a bowing or outward curvature of the elements **41** to a position substantially shown in FIG. 1 and in FIG. 3B. The extent of such bowing is determined by the length of the elements **41** as compared to the travel of the housing **12** with respect to the inner mandrel **26**. Such relationship is readily adjusted so that when the stop elements **41** are disposed in the casing C below the tubing T, contact is made between the electrical contacts **27** and **27'** and the contact ring **28** prior to or substantially simultaneously with a full expansion of the elements **41** of the safety mechanisms S. Thus, when the safety mechanism S is in the casing C or other well pipe of a predetermined internal diameter which is sufficiently large to prevent engagement of all of the stop

elements **41** with the wall of the casing C or such other well pipe prior to the contact between the electrical contacts **27** and **27'** and the electrical ring **28**, the firing can be effected at the explosive means E. However, if the safety mechanism S is in a section of the tubing T or some well pipe of a smaller minimum diameter than the casing C, when the wire line L is pulled upwardly, and if the mandrel **36** has become caught by mud or is otherwise restrained against upward movement, the elements **41** will be expanded outwardly into engagement with the wall of such tubing T or pipe so as to prevent a further movement of the housing **12** upwardly with respect to the mandrel **26** and such limitation will prevent the engagement of the contacts **27** and **27'** with the contact ring **28**, thereby preventing detonation of the explosive means E.

Therefore, the safety mechanism S assures that the explosive E is in the well pipe of a predetermined minimum diameter such as casing C prior to the firing of such explosive E.

In the use of operation of the apparatus illustrated in FIGS. 1 through 3B, the apparatus A is lowered through the tubing T until the explosive means E has reached an elevation within the casing C at which it is desired to perforate, which elevation is normally in proximity to a well formation such as indicated at F in FIG. 1. Thereafter, the line L is raised to initially engage the resilient latch fingers **10** within the coupling or recess C'.

After the latch fingers **10** have thus been engaged in the collar or recess C', the lower tubular support **36** and the structure extending thereabove including the inner mandrel **26** are anchored against further upward movement while the housing **12** and the part connected therewith are moved upwardly. Therefore, a continued upward movement of the wire line L after the latch fingers **10** are engaged in the collar or recess C' causes a relative movement between the housing **12** and the inner mandrel **26**, resulting in a movement of the contacts **27** and **27'** towards the electrical contact ring **28**. The spring **30** is also compressed during such relative movement as indicated in FIG. 3A.

When the safety mechanism S is employed, it is actuated during the relative longitudinal movement of the housing **12** upwardly with respect to the inner mandrel **26** as previously explained so as to bow or otherwise laterally extend the elements **41** outwardly to the condition illustrated in FIG. 3B. However, contact is made between the electrical contacts **27** and **27'** and the electrical contact ring **28** before the resilient fingers **41** are actually bowed into full contact with the inner surface of the casing C. If the safety mechanism S were still in the tubing T, or in a well pipe of less than the minimum predetermined diameter setting for such springs **41**, the stop elements **41** would engage the inner surface of the tubing T prior to the contact of the contacts **27** and **27'** with the ring **28** and therefore it would be impossible to fire or detonate the explosive E while the apparatus A remained in such position.

In any event, when the safety mechanism S is in the well casing C and is not bowed out sufficiently to contact the wall of the casing C prior to the engagement of the contacts **27** and **27'** with the ring **28**, a detonation of the explosive means E is accomplished upon the completion of the electrical circuit by the closing of the contacts **27** and **27'** with the ring **28**. The battery **15** supplies the electricity for the circuit that accomplishes such detonation. The explosive means E is illustrated in the drawings as a perforator of a known construction which is adapted to be fired for perforating the casing C adjacent to the well formation F for producing fluid in the well known manner. However, it will be understood that the explosive means E may be another type of device or apparatus other than a perforator.

In view of the time-delay provided by the restrained movement of the piston **25** downwardly with respect to the housing **12** through the fluid in the chamber **12*d***, is possible to pull the apparatus A out of the casing C and the tubing T by pulling up on the wire line L rapidly to bend the latch fingers **10** downwardly or to break them prior to the time that the contacts **27** and **27'** reach the ring **28**. The apparatus A can thus be pulled out of the well without firing the explosive means E if this becomes necessary or desirable. Also, in the event the safety mechanism S is positioned within the tubing T when the wire line L is pulled upwardly and the latch fingers **10** are engaged in a collar or recess, the explosive means E cannot be fired, but upon a lowering of the line L the safety mechanism S will return to the inactive or retracted position (FIG. 2C) and the entire apparatus A may then be lowered downwardly in the well to move the safety mechanism S to a position below the tubing T for subsequent operation of the apparatus A to a firing position.

A modified apparatus A–1 is illustrated in part in FIGS. 4 and 5. Some of the parts of the apparatus A–1 are identical with those illustrated in FIGS. 2A and 2B and like parts bear the same numerals and letters. Thus, the inner mandrel **26** in FIG. 4 is identical with the mandrel **26** of FIGS. 2A and 2B and all the parts connected above the flange or disk **32** with respect to the mandrel **26** are identical to those shown in FIGS. 2A and 2B and therefore have been omitted from FIG. 4. The spring housing **31** of FIG. 4 is identical to the spring housing **31** of FIG. 2B and all of the parts connected above the spring housing **31** in FIGS. 2B and 2A are a part of the apparatus A–1 of FIG. 4. It will be noted that the apparatus of FIG. 4 does not include a safety mechanism S and it therefore may be operated in either well tubing or well casing or any other type of well pipe of varying diameters, depending upon the size of the apparatus A–1 and the latch fingers **110** therewith. As illustrated in FIG. 4, the latch fingers **110** are shown as disposed in a collar C' of a casing C, although the collar C' may be formed in a tubing or other well pipe.

The tubular support **136** of FIG. 4 is modified as compared to the tubular support **36** of FIG. 2C, but the support **136** is preferably connected to the box connector **35** in the same manner as the support **36** is connected to the box connector **35** in FIG. 2C. The lower end of the tubular support **136** is preferably enlarged as indicated at **136*a*** and is provided with a plurality of downwardly and inwardly inclined slots **136*b*** for receiving the inner ends of the latch fingers **110**. Set screws **50** are preferably provided to hold the latch fingers **110** in the slots **136*b*** or any other suitable means may be provided. The electrical wires **17'** extends through the bore **136*c*** of the tubular support **136** and continues downwardly therebelow to the explosive means E.

Instead of the safety mechanism S, a housing extension **112** is connected below the spring housing **31** and is provided with longitudinal slots **112*a***, through which the latch fingers **110** extend (FIG. 5). The lower end of the housing extension **112** is connected to the upper end of a tubular pipe or support **55** which directly supports the explosive means E which may be a conventional perforator or other apparatus having an explosive therewith. It is thus to be noted that with the form of the invention illustrated in FIGS. 4 and 5, the relatively heavy perforator apparatus E or other explosive means is supported through the housing **12** and directly by the wire line L without imposing any load on the inner mandrel **26**. This in itself is a safety feature since it reduces the possibility of premature firing by the imposition of the relatively heavy weight of the supported explosive means E on the mandrel **26** which might prematurely close the contacts **27** and **27'** with the electrical contact ring **28**.

The operation or use of the form of the invention shown in FIGS. 4 and 5 is substantially identical to that described in connection with FIGS. 2A–3B. Since the safety mechanism S is not employed with the form shown in FIGS. 4 and 5, the apparatus A–1 may be detonated

in tubing or casing of any size through which the apparatus A–1 may be lowered, but the danger of premature firing of the apparatus A–1 is none the less not great because the weight of the perforator or other explosive means E is carried directly by the wire line L. When the latch fingers **110** have been disposed in a collar or recess such as C′ (FIG. 4), the continued upward pull on the wire line L brings the electrical contacts together to close the electrical circuit to the perforator or other explosive means E in the same manner as described above in connection with the form of the invention shown in FIGS. 2A–2C. The latch fingers **110** may be either bent downwardly or broken off by a rapid upward movement of the wire line L prior to firing the apparatus should it be desirable to come out of the well without detonating the explosive means E.

In FIGS. 6 and 6A, a modified safety mechanism S′ is illustrated, wherein each of the laterally extensible stop elements is formed by a pivoted pair of links **141***a* and **141***b*. The links **141***a* and **141***b* are pivotally connected to each other at pivot pin **141***d*, while the link **141***a* is pivotally connected to the tubular support **36** and thus to the mandrel **26** by a pivot pin **141***c*. The lower link **141***b* is pivotally connected to the housing extension **140** and thus to the housing **12** by a pivot pin **141***e*.

When the housing **12** moves upwardly by pulling on the wire line L, after the support **36** has been caught or otherwise restrained against upward movement, the links expand outwardly to an expanded position and into engagement with the tubing T as shown in FIG. 6A. When the safety mechanism S′ is thus in the tubing T, the outermost parts of the links **141***a* and **141***b* contact the inside of the tubing T or well pipe of less diameter than the casing C, and further longitudinal upward movement of the housing **12** relative to the mandrel **26** is prevented. If the safety mechanism S′ is in the casing C, then the links **141***a* and **141***b* do not engage the casing C and do not interfere with the closing of the electrical contacts for detonation of the explosive means E. The modified safety mechanism S′ of FIGS. 6 and 6A thus serves the same purpose as the safety mechanism S of FIGS. 1, 2C, and 3B.

It will be understood from the foregoing description that the safety mechanism S and the modified safety mechanism S′ may be used with any apparatus to stop or limit relative longitudinal movement of two or more elements such as a rod and a sleeve by engaging the stop elements with the inside of a pipe in which the apparatus is disposed.

The foregoing disclosure and description of the invention are illustrative and explanatory thereof and various changes in size, shape and materials, as well as in the details of the illustrated construction, may be made within the scope of the appended claims without departing from the spirit of the invention.

What is claimed is:

1. A time-delay apparatus for use in a well, comprising:

(a) an outer housing having a fluid chamber therein;

(b) a wire-line secured to said outer housing for supporting and moving same in a well;

(c) an inner mandrel slidably disposed in said outer housing;

(d) a piston mounted on said inner mandrel and disposed in sealing contact with the wall of said fluid chamber for movement in said fluid;

(e) said piston having a restricted passage extending substantially longitudinally therethrough for providing a restraint for the flow of fluid therethrough as the piston and the inner mandrel move longitudinally relative to said housing;

(f) resilient means in said housing urging said piston to an upper position in said housing; and

(g) latch means connected to said inner mandrel for anchoring the inner mandrel and the piston to prevent an upward movement thereof when the housing is pulled upwardly by the wire-line.

2. The apparatus set forth in claim **1**, including:

(a) a first electrical contact on said housing;

(b) a second electrical contact on said mandrel spaced longitudinally from said first electrical contact when the piston is in said upper position and adapted to engage said first electrical contact when the piston has moved to a lower position relative to the housing by a predetermined relative movement between said housing and said mandrel, and

(c) an explosive means disposed below said housing and connected in an electrical circuit with said electrical contacts for detonation upon the engagement of the electrical contacts with each other.

3. The apparatus set forth in claim **1**, including:

(a) an explosive means connected to said inner mandrel below said housing, and

(b) said latch means being connected to said inner mandrel below said housing.

4. The apparatus set forth in claim **1**, including:

(a) an explosive means connected to said housing, and

(b) said latch means connected to said inner mandrel in a position above the explosive means.

5. The apparatus set forth in claim **1**, wherein:

(a) said inner mandrel extends above and below said piston whereby the volume of the fluid and the inner mandrel in the fluid chamber on each side of the piston remains the same throughout the relative movement of the piston and the housing .

6. The apparatus set forth in claim **1**, wherein:

(a) said inner mandrel extends above and below said piston whereby the volume of the fluid and the inner mandrel in the fluid chamber on each side of the piston remains the same throughout the relative movement of the piston and the housing; and

(b) a floating piston disposed at the upper end of said fluid chamber above said piston.

7. The apparatus set forth in claim **1**, including:

(a) a first electrical contact on said housing;

(b) a second electrical contact on said mandrel spaced longitudinally from said first electrical contact when the piston is in said upper position and adapted to engage said first electrical contact when the piston has moved to a lower position relative to the housing by a predetermined relative movement between said housing and said mandrel;

(c) an explosive means disposed below said housing and connected in an electrical circuit with said electrical contacts for detonation upon the engagement of the electrical contacts with each other; and

(d) a safety device connected to the housing and operable to prevent said electrical contacts from engaging each other unless the explosive means is in a well pipe of a minimum predetermined diameter.

8. The apparatus set forth in claim **1**, including:

(a) a first electrical contact on said housing;

(b) a second electrical contact on said mandrel spaced longitudinally from said first electrical contact when the piston is in said upper position and adapted to engage said first electrical contact when the piston has moved to a lower position relative to the housing by a predetermined relative movement between said housing and said mandrel;

(c) an explosive means disposed below said housing and connected in an electrical circuit with said electrical contacts for detonation upon the engagement of the electrical contacts with each other;

(d) a plurality of laterally extensible stop elements carried by said housing; and

(e) abutment means carried by said mandrel and operably engageable by said stop elements to cause said elements to extend laterally outwardly upon an upward longitudinal movement of said housing relative to said mandrel, whereby said elements are adapted to engage the inside of a well pipe to prevent further movement of the housing relative to the inner mandrel so that said electrical contacts cannot move into

engagement to detonate the explosive means unless the elements are in a well pipe of a minimum predetermined diameter.

9. The apparatus set forth in claim **1**, including:

(a) a housing extension connected to the lower end of the housing; and

(b) said latch means including a plurality of latch fingers extending upwardly and outwardly in the vicinity of said housing extension for engagement in a pipe collar or the like to prevent the mandrel from moving upwardly when the housing moves upwardly relative thereto.

10. The apparatus set forth in claim **1**, including:

(a) a first electrical contact on said housing;

(b) a second electrical contact on said mandrel spaced longitudinally from said first electrical contact when the piston is in said upper position and adapted to engage said first electrical contact when the piston has moved to a lower position relative to the housing by a predetermined relative movement between said housing and said mandrel; and

(c) an electrical circuit including said contacts and battery disposed in said housing, which circuit is electrically completed only when said electrical contacts are moved into engagement with each other.

11. A safety device adapted to be used in a well pipe, comprising:

(a) a housing;

(b) a wire line secured to said housing;

(c) a mandrel mounted with said housing for limited relative movement with respect thereto; and

(d) a stop element operably disposed between said housing and said mandrel and adapted to be laterally extended by relative longitudinal movement of said housing and said mandrel with respect to each other upon an upward movement of said wire line for limiting the amount of relative movement of said housing and said mandrel.

12. The structure set forth in claim **11**, including:

(a) means operably connecting said stop elements between said mandrel and said housing for effecting the lateral extension of said stop elements.

13. The structure set forth in claim **11**, wherein:

(a) each of said stop elements includes a pair of links; and

(b) means pivotally connecting each of said pairs of links to each other and between the mandrel and the housing.

14. The structure set forth in claim **11**, wherein:

(a) each of said stop elements includes a leaf spring;

(b) means connecting the lower end of each of said springs to the housing; and

(c) shoulder means on the mandrel engageable by the upper end of each spring during the lateral extension thereof.

References Cited

UNITED STATES PATENTS

2,155,322	4/1939	McCullough	102—21.8
3,157,119	11/1964	Porter	102—21.8
3,180,261	4/1965	Moore	102—21.8

BENJAMIN A. BORCHELT, *Primary Examiner.*

SAMUEL W. ENGLE, *Examiner.*

V. R. PENDEGRASS, *Assistant Examiner.*