March 5, 1968 G. G. BROWN 3,371,986

DOOR AND SEALING ARRANGEMENT THEREFOR

Filed Feb. 24, 1964 2 Sheets-Sheet 1

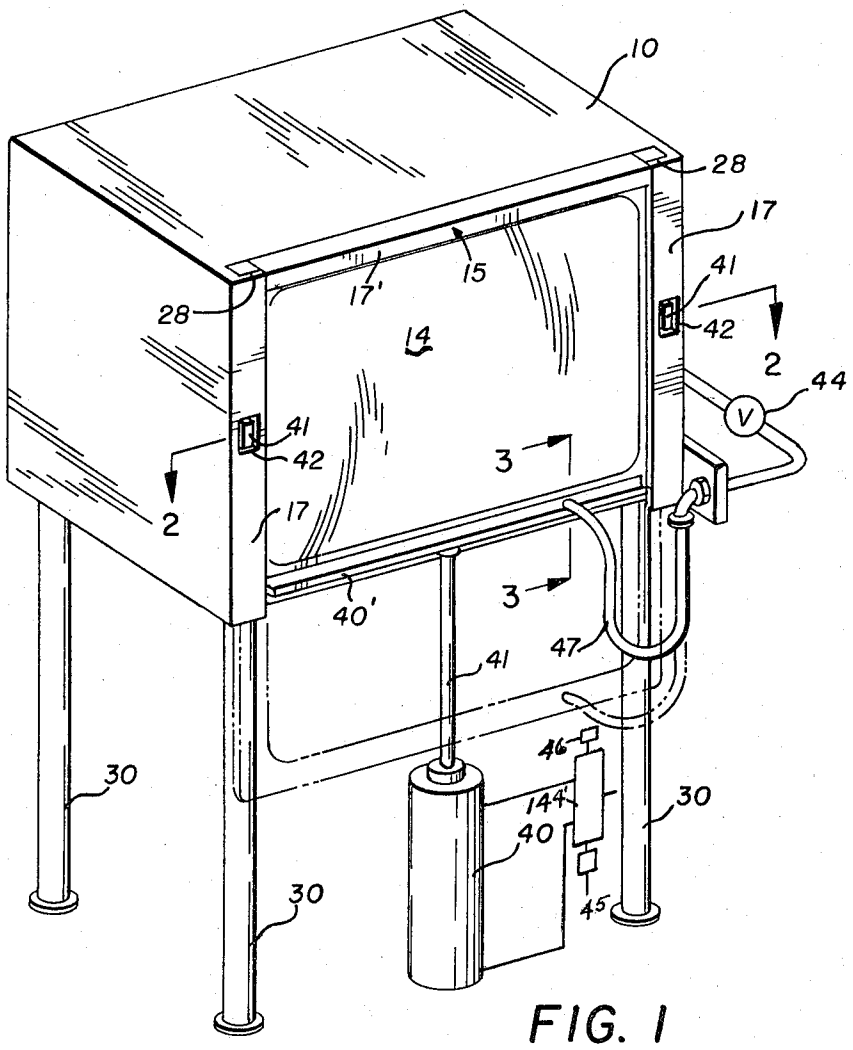

FIG. 1

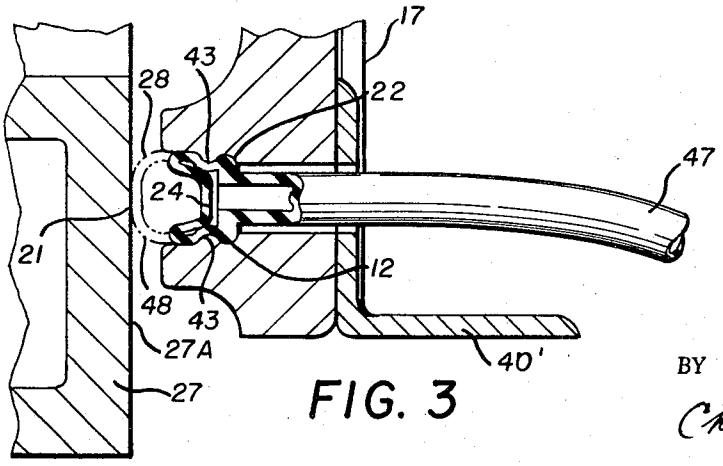

FIG. 3

INVENTOR.
GILBERT G. BROWN

BY

Charles L. Lorenzen
ATTORNEY

DOOR AND SEALING ARRANGEMENT THEREFOR

Filed Feb. 24, 1964 2 Sheets-Sheet 2

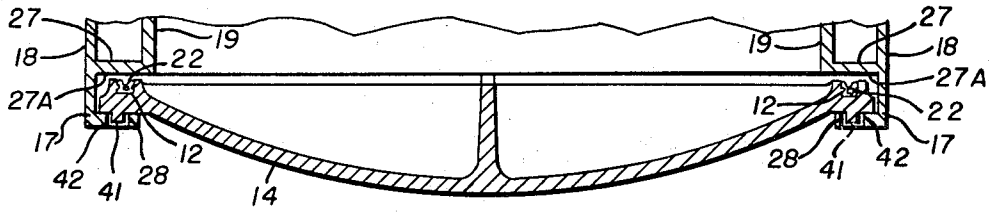

FIG. 2

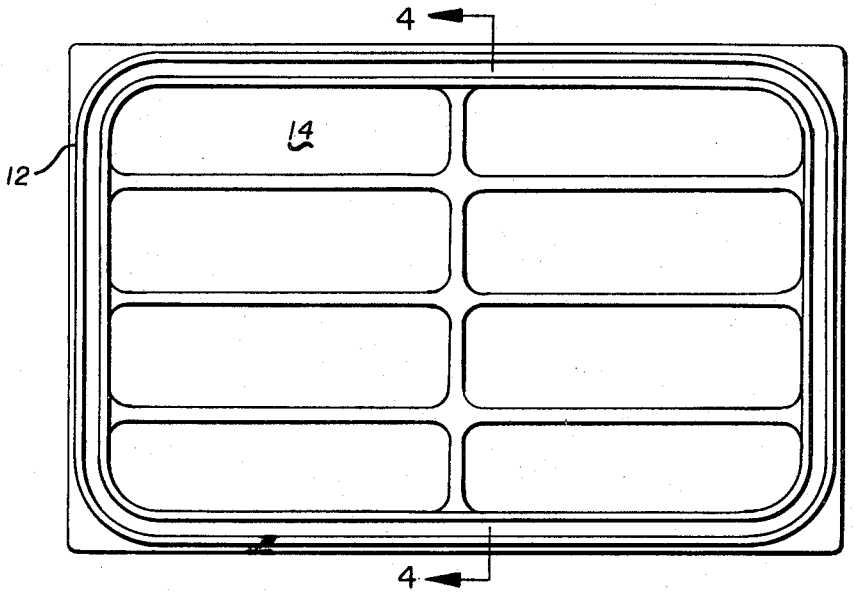

FIG. 5

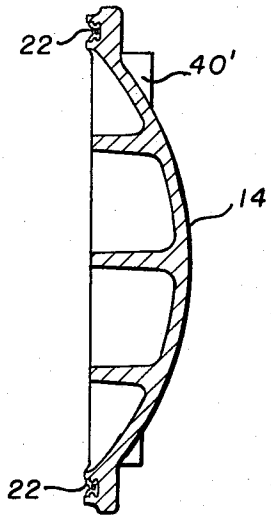

FIG. 4

INVENTOR.
GILBERT G. BROWN
BY
Charles L. Lovercheck
ATTORNEY

United States Patent Office

3,371,986

Patented Mar. 5, 1968

1

3,371,986

DOOR AND SEALING ARRANGEMENT THEREFOR

Gilbert G. Brown, Erie, Pa., assignor to American Sterilizer Company, Erie, Pa., a corporation of Pennsylvania

Filed Feb. 24, 1964, Ser. No. 346,726
5 Claims. (Cl. 21—98)

ABSTRACT OF THE DISCLOSURE

The present invention relates to a sterilizing chamber having a surface around the door and an inflatable seal which is controlled by pressure within the chamber so that the seal will not be released nor will the door be opened until the pressure within the chamber has fallen below a predetermined value. The chamber is characterized by a double wall connected together by a member that defines the surface on which the inflatable seal rests.

This invention relates to doors and, more particularly, to doors in combination with pressure and/or vacuum vessels.

The present invention discloses a door for use on any type of pressure or vacuum vessel such as dishwashers, sterilizers, sanitizers, and other devices which contain a pressure or vacuum. The edges of the door slide behind an overhang on the end plate of the vessel when closed in such manner that three of the door's edges are behind the overhang which is fastened securely to the end plate. When the seal is inflated and/or the shell pressurized, the door will be forced against the overhang and prevent further lateral motion of the door.

The present invention also solves a problem of long standing in guillotine doors. An obvious mechanical weakness is inherent in a guillotine door. That is, the unrestrained side of the door will tend to bulge when the shell is pressurized. This is overcome by welding a reinforcing bar to the unrestrained side. For example, in a specific use of the door, its size is 20" x 30" or six hundred square inches. The internal shell pressure is fifty pounds. This indicates that a total force of 30,000 pounds is acting against the door which is restrained by the overhang on only three sides. Hence, the reinforcing bar on the restrained edge.

It should be of no significance whether the door is flat, dished, concave, or convex. This deals specifically with forces and bending of the door under pressure.

The door may be powered to open and close in any of several ways. For example, (a) an air or hydraulic, or air-draulic (air over fluid) cylinder may supply the motive force. The door may be powered up, then down by gravity by simply bleeding air or oil from the cylinder. (b) The door may be moved by cables wound around a drum and powered by a motor. (c) A threaded rod may be revolved by a motor with a threaded nut fastened to the door, or the rod may be threaded with both a left and right handed thread such as used by the level wind on a fishing reel. When the latter principle is used, the rod is revolved in one direction only and the nut engages the other thread at the end of each stroke.

Presently constructed pressure vessels utilize a diaphragm arrangement for a coincidental locking method so that the door cannot be opened when the shell is

2

pressurized. Pressure in the shell depresses the diaphragm by the unbalanced forces between internal shell pressure and atmosphere. A pin is forced into the door opening mechanism and prevents unauthorized door opening under pressure. This device is quite costly. The present invention discloses a novel method for accomplishing exactly the same results at a cost of approximately one percent of the cost of the diaphragm method. A small rectangular bar, for example, one-fourth inch square and one and one-half inches long is welded or cast in a horizontal mode on the front of the door, one bar at each side thereof. When the door is fully closed, the bars are positioned directly opposite a slot of somewhat larger dimensions. The pressurizing of the seal and/or the shell forces the door outward and the bars are captivated in the slot, preventing the door from opening until the shell and the seal are deflated.

A pressure interlock switch is used in the seal air inflation circuit and electrically tied in with the door actuating mechanism so that the door cannot be opened until the pressure in the seal is reduced to atmospheric. This is very important since, if the seal were inflated and the door powered open, the inflated seal would be sheared off or damaged when it passed the leading edge of the lower section of the opening in the shell. This also prevents the inadvertent opening of the door when the chamber is under pressure.

A pressure switch relates the internal shell pressure to atmospheric and is electrically tied in with the door opening mechanism so that the switch cannot be actuated until the internal shell pressure is within four ounces of atmospheric. The door could move vertically, laterally, or horizontally within the scope of the present invention.

As a matter of convenience the word sterilizer or washer sterilizer is sometimes used herein. It is understood that these words contemplate all pressure vessels wherein a guillotine door can be used to advantage.

It is accordingly an object of the present invention to provide an improved door.

Another object of the invention is to provide a door and sealing means in combination therewith which is simple in construction, economical to manufacture, and simple and efficient to use.

Still another object of the invention is to provide an improved inflatable seal in combination with a door.

It is another object of the invention to provide an improved guillotine type door.

A further object of the invention is to provide an improved locking mechanism for a guillotine type door.

Still a further object of the invention is to provide an improved safety mechanism for a guillotine door.

With the above and other objects in view, the present invention consists of the combination and arrangement of parts hereinafter more fully described, illustrated in the accompanying drawing and more particularly pointed out in the appended claims, it being understood that changes may be made in the form, size, proportions, and minor details of construction without departing from the spirit or sacrificing any of the advantages of the invention.

In the drawing:

FIG. 1 is an isometric view of a washer sterilizer with the improved door installed therein;

FIG. 2 is a cross sectional view taken on line 2—2 of FIG. 1;

FIG. 3 is an enlarged cross sectional view similar to FIG. 2 of the door;

FIG. 4 is a side cross sectional view of the door; and

FIG. 5 is a view of the door taken from inside the washer sterilizer looking out.

Now with more particular reference to the drawing a washer sterilizer **10** is shown having legs **30** and a guillotine type door **14** for closing the door opening of the washer sterilizer. The washer sterilizer may be of any general type of autoclave such as shown, for example, in Patent 3,086,263. Such a sterilizer is usually made with double wall shells such as walls **18** and **19** and may be joined by a connecting member, such as member **27**, having an exposed front surface **27***a* extending around the door opening.

An L-shaped flange **17** could be welded to the side of the washer sterilizer at each side of the door and another flange **15** above the door as shown. The channels formed by flange **17** define two generally parallel, opposed channels, one at each side of the door, the channels opening toward each other, through which the door **14** could slide up and down. The channel formed by flange **15** across the top of the door opening downward forms a channel in which the top of the door is restrained. The door can be moved by any suitable moving means, for example, the cylinder **40** having the piston rod **41** extending therefrom which will move the door up and down. The flanges **17** will overlie the sides of the door to limit its outward movement, yet allow it to move freely between the flange **17** and the surface **27***a*. These flanges **17** must be welded to the washer sterilizer securely enough to withstand the internal pressure which would ordinarily be impressed inside the washer sterilizer against the inside surface of the door **14**, in addition to any force applied by the inflatable seal **22**. The upper edge of the door will slide under flange **17′** when the door is in closed position.

The door **14** has an inwardly facing groove formed in its surface which extends entirely around the door adjacent its outer edge which receives the inflatable seal **22**. The inflatable seal is generally rectangular in cross section and fits into the rectangular groove **12**. The groove **12** will be slightly deeper than the uninflated depth of the inflatable seal **22** so that the seal will collapse and be entirely inside the groove when uninflated and, therefore, it will not interfere with the movement of the door.

The part of the seal **22** adjacent the chamber will generally define a half cylinder when expanded and unrestrained. When the door is closed, the seal will engage surface **27** and the cylindrical surface will be distorted to the shape shown in phantom lines at **28**.

Beads **43** are formed along each of the sides of groove **12** and they extend into it and overlie the bottom thereof. The seal **22** has two grooves, one on each side of it that extend entirely around the gasket. The part of the seal **22** that is received in groove **12** has an outside surface that is an intaglio of the inside surface of groove **12**. Beads **43** are received in the two grooves in seal **22**. These beads thus overlie the part of the seal **22** that is received in groove **12** and hold it firmly against removal therefrom.

The bottom of the door has reinforcing angle **40′** across it welded thereto which acts as a beam to prevent the door from buckling when the chamber is under pressure.

In use, when the seal is deflated, the door will have a clearance between the door and the surface **27***a* so that the door can move toward the surface **27***a* and lug **41** can move out of notch **42**. The door can then be moved freely to open and closed positions by means of a cylinder **40**. When the door is in closed position, the hydraulic fluid or air or some other suitable medium can be injected into the hollow **24** of the inflatable seal. This will expand it and it will tend to assume the position indicated at **48**. This will expand the seal **22** and cause it to engage the surface **27***a*, forcing the door out into engagement with the flange **17**, and, thereby, forming a pressure proof seal between the surface **27***a* and the door. Lugs **41** will be located in notches **42** and the door will thus be held closed.

Even if the cylinder **40** is inadvertently actuated, the lugs **41** will be put in shear and hold the door closed.

The control circuit shown is exemplary of a pressure actuated circuit which can be used to insure that the door is not accidentally opened while the chamber is under pressure. The valve **44** is a pressure actuated four-way valve having a floating spool. The spool floats so that it will not allow the door to close if pressure fails as would be the case if valve spool were spring loaded. When the pressure is present inside the chamber, the valve will be held in position to keep a pressure on the space below the piston in cylinder **40**. When the pressure in the chamber is reduced, the valve will connect the top of the cylinder to pressure and bleed the pressure from below the cylinder. Thus, by opening valve **45**, the door will be opened. The movement up and down of the cylinder itself can be controlled by valves **45** and **46** either manually or by remote control. This same pressure in valve **44** can be referenced to line **47** which will connect to the source of pressure to the inside of seal **22**. Thus, the door cannot move downward so long as the seal **22** is inflated, because of the interlock, until such time as the interlock is closed and it points the spool to move laterally. Obviously, an electric switch mechanism could be substituted for the valve **44**.

The foregoing specification sets forth the invention in its preferred practical forms but the structure shown is capable of modification within a range of equivalents without departing from the invention which is to be understood is broadly novel as is commensurate with the appended claims.

The embodiments of the invention in which an exclusive property or privilege is claimed are defined as follows:

1. In combination, a chamber and a door, said chamber having a lateral opening therein providing a door opening,

a vertically disposed flange fixed to said chamber along each side of said door defining a channel along each side of said door opening,

said channels facing each other,

said flange across the top of said door fixed to said chamber and defining a channel opening,

said door having its lateral edges slidably received in said vertically disposed channels, the top edge of said door being slidable into said downwardly channel opening,

means to move said door to open and to closed position,

an inflatable sealing member on the inner side of said door on the surface thereof adjacent said chamber and disposed adjacent the outer edges of said door and around said opening,

a lug on said door slidable under said vertically disposed flanges, and

an opening in each said vertically disposed flange receiving said lugs when said door is in closed position and forced outwardly when said seal is inflated,

said seal making sealing engagement with said chamber around said door.

2. The combination recited in claim **1** wherein

said chamber has relatively thick walls comprising an inside shell and an outside shell connected by a connecting member generally parallel to said door, and

said door seal makes sealing engagement with outwardly disposed surface disposed on said connecting member.

3. The combination recited in claim **1** wherein

said groove has an inwardly extending bead like flange on each side thereof engaging grooves in said sealing member whereby said sealing member is held in said groove.

4. The combination recited in claim **1** wherein

a member defining a downwardly facing channel is disposed above said opening and attached to said chamber and the top of said door slides into said channel

when said door is in closed position whereby the top of said door is prevented from buckling by said members defining said channel.

5. The combination recited in claim 4 wherein a reinforcing beam member is fixed to the bottom of said door and extends from side to side whereby the bottom edge of said door is reinforced against buckling.

References Cited

UNITED STATES PATENTS

2,358,344	9/1944	Meyer	21—98 X
2,507,360	5/1950	Wicks	49—477 X

JAMES H. TAYMAN, JR., *Primary Examiner.*