WEB WINDING

Filed May 17, 1966 4 Sheets-Sheet 1

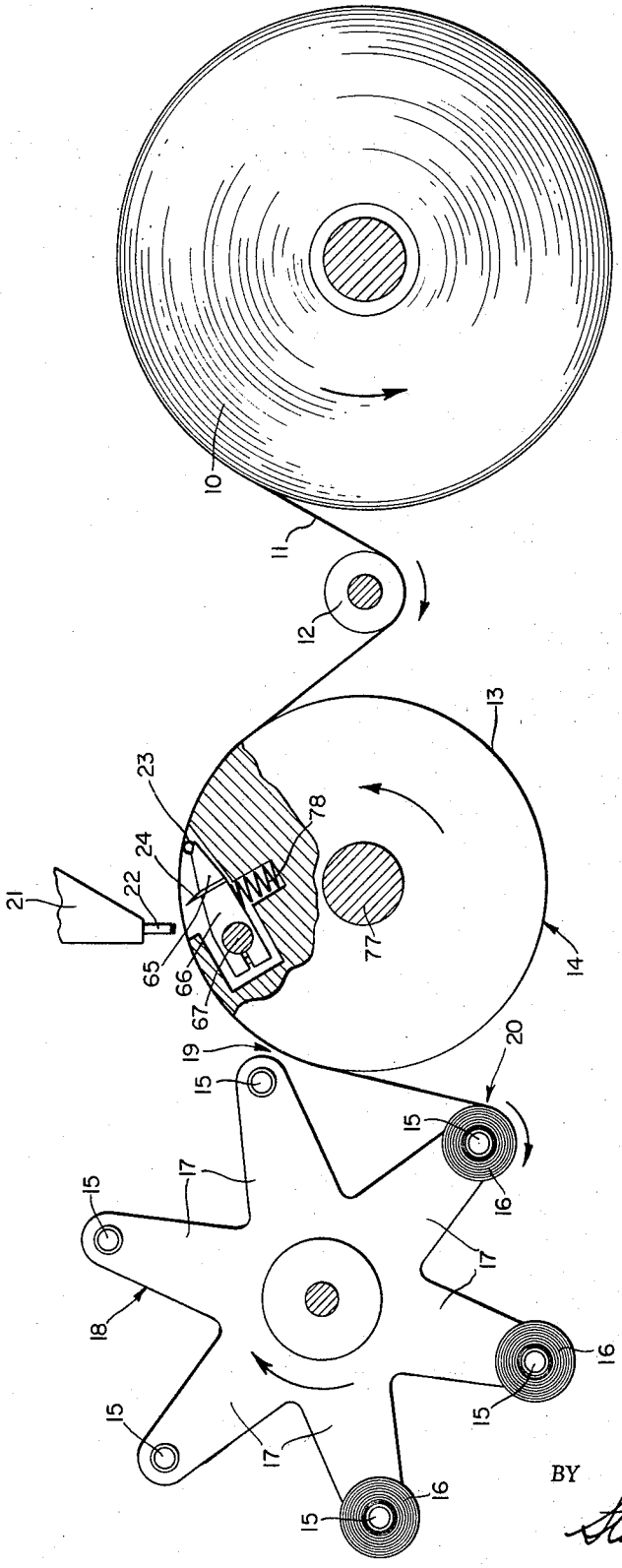

Fig. 1

INVENTOR.
WALTER H. HERMAN
BY
Stanton T. Hadley
ATTORNEY

WEB WINDING

Filed May 17, 1966 4 Sheets-Sheet 2

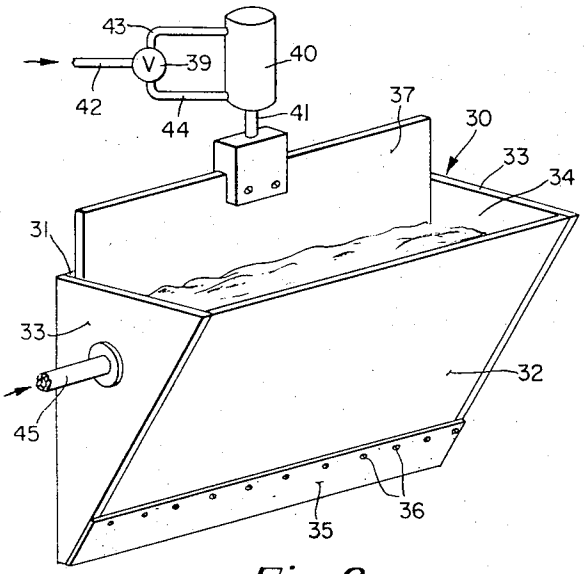

Fig. 2

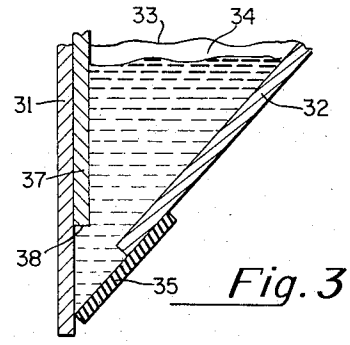

Fig. 3

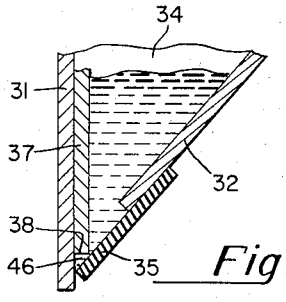

Fig. 4

Fig. 6

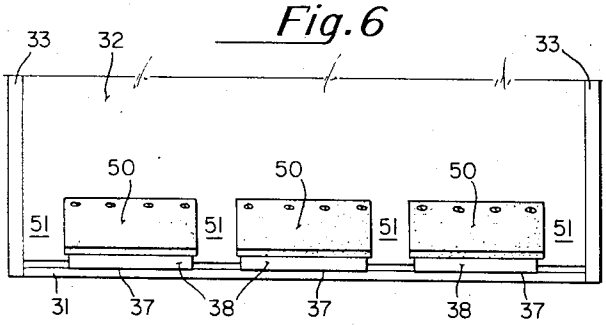

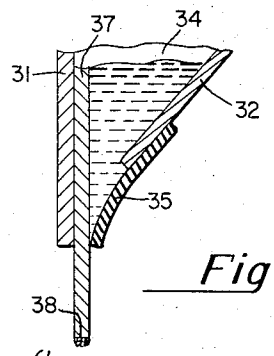

Fig. 5

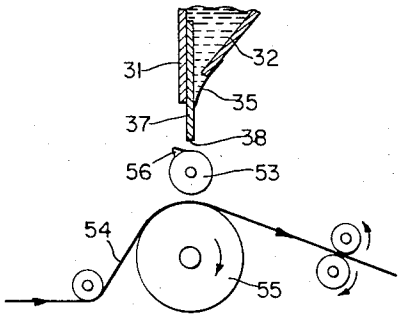

Fig. 7

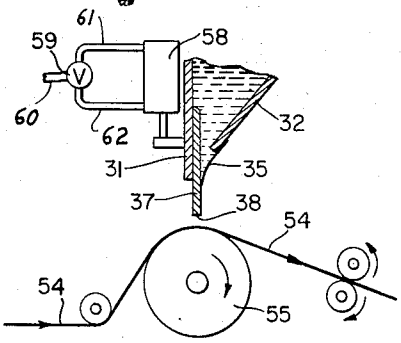

Fig. 8

INVENTOR.
WALTER H. HERMAN
BY
Stanton T. Kelley
ATTORNEY

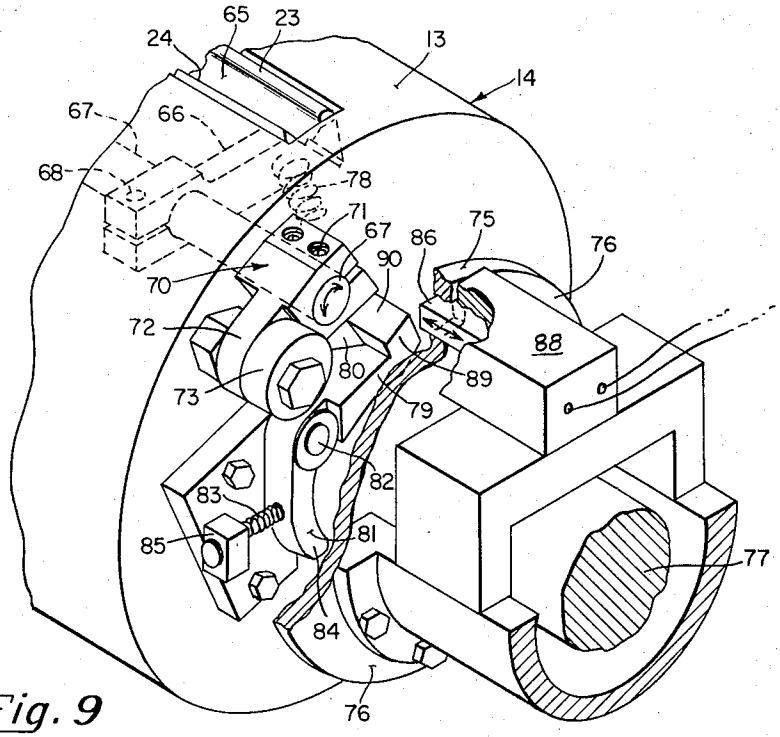

Fig. 9

Fig. 10

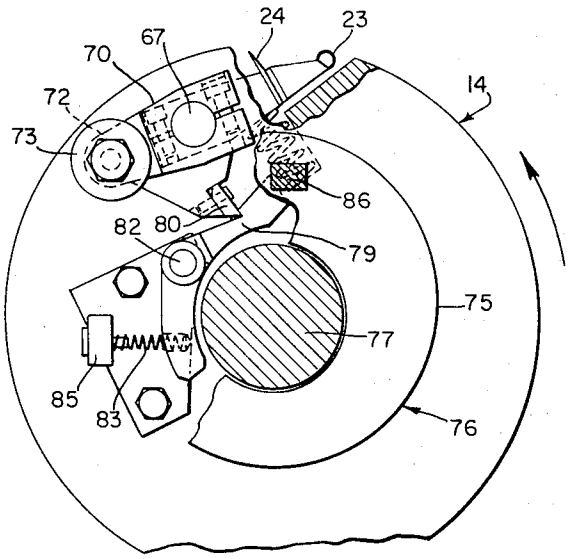

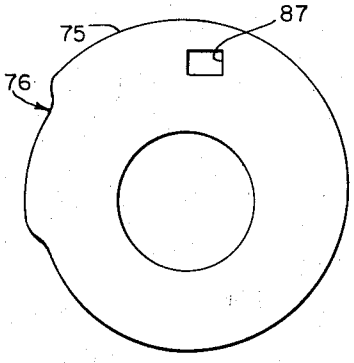

Fig. 11

INVENTOR.
WALTER H. HERMAN
BY Stanton T. Bradley
ATTORNEY

WEB WINDING

Filed May 17, 1966 4 Sheets-Sheet 4

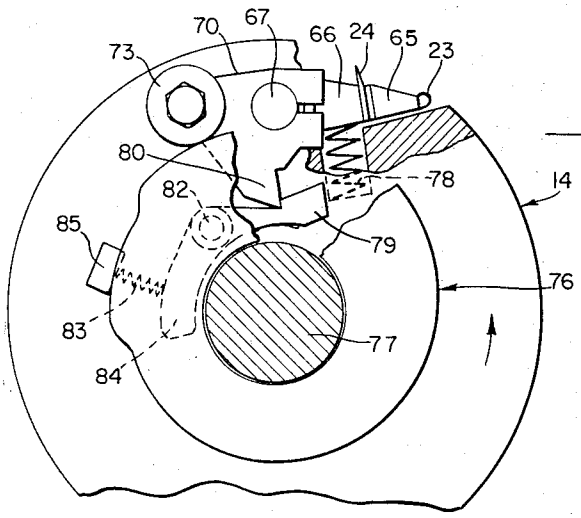

Fig. 12

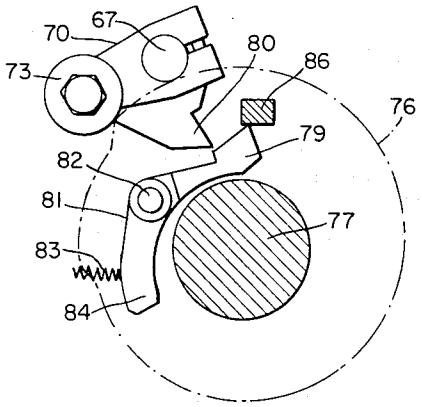

Fig. 13

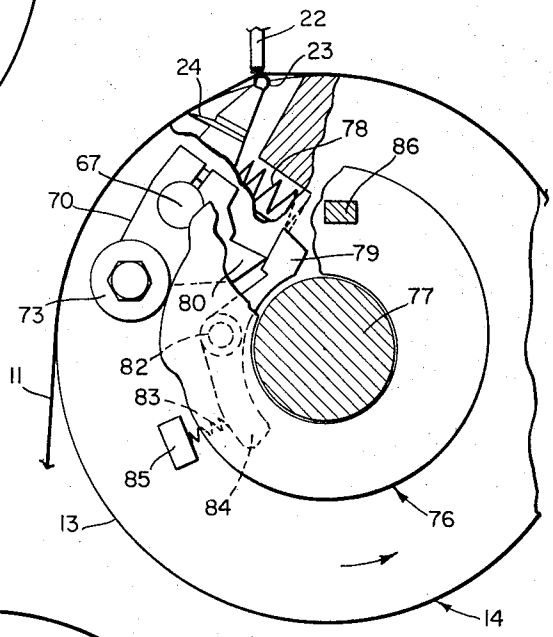

Fig. 14

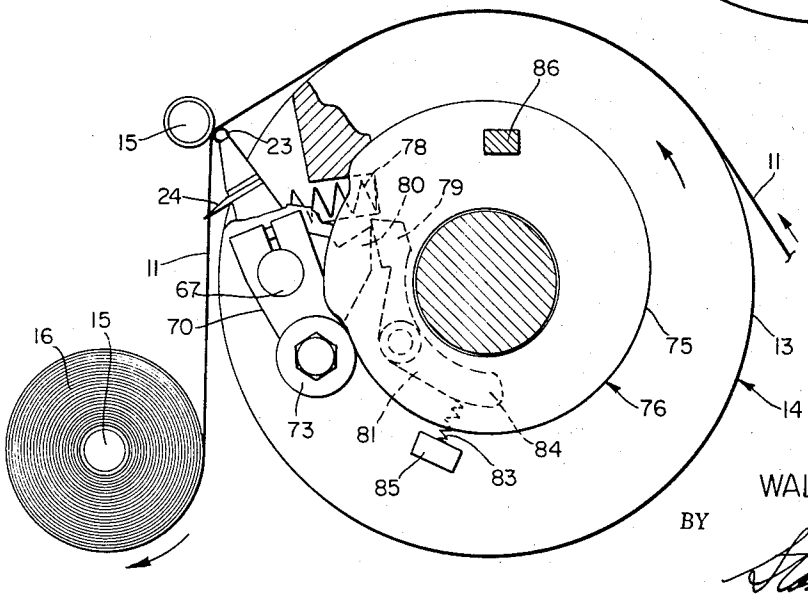

Fig. 15

INVENTOR.
WALTER H. HERMAN
BY
Stanton T. Holley
ATTORNEY

United States Patent Office

3,369,766

Patented Feb. 20, 1968

1

3,369,766
WEB WINDING

Walter H. Herman, South Hadley, Mass., assignor to Scott Paper Company, Philadelphia, Pa., a corporation of Pennsylvania

Filed May 17, 1966, Ser. No. 550,738
11 Claims. (Cl. 242—56)

This invention relates to improvements in web winding, and more particularly, to a new and improved method and apparatus for continuously converting a web of sheet material from a single large parent or mill roll into a plurality of relatively small rolls to be sold to consumers.

In the past, it has been the practice to wind consumer product rolls of sheet material such as toilet tissue, paper toweling, and the like by means of automatic winding equipment of the so-called "continuous" type. One of the problems experienced with this type of equipment has been that of effecting a transfer of the web running to a nearly completed wound roll on one mandrel to the empty core on a succeeding mandrel in order to commence the winding of a new roll. Although a large variety of methods and apparatus have been devised to accomplish this task, none of these have been entirely satisfactory and sufficiently reliable. The defects experienced with these prior methods and apparatus have become more prevalent with the requirement for new higher speed winders capable of continuous operation at web speeds on the order of 2000 feet per minute and higher.

One of the most commonly employed methods for accomplishing transfer of a web to an empty core involves applying adhesive to the surface of the core in a thin layer by means of an applicator roller and thereafter advancing the coated core to a web pick-up position adjacent the bed roll. The core is rapidly rotated prior to or after adhesive application so that the velocity of its surface is substantially equal to the velocity of the traveling web. The web is severed from the previous roll and moved into contact with the coated core to commence the winding of a new roll.

Several problems, common to most known methods of web transfer, are present with the above method. Initially, it will be apparent that in order to insure reliable and successful web transfer, an excessive amount of adhesive must be applied to the core. It is necessary to apply adhesive in stripes to the entire circumference of the core. Additionally, such rapid rotation of the core as is necessary to match its surface velocity to that of the web results in the flinging of some of the glue off of the core and onto the web and surrounding equipment resulting in considerable mess and product contamination. The resulting product rolls have had a substantial number of web layers near the center of the roll adjacent the core adhered together or stained due to permeation or absorption of the excess adhesive on the core through the several web layers. This waste is costly both to the consumer and the manufacturer.

In view of the above shortcomings and difficulties experienced with prior methods and apparatus, it is a principle object of the invention to provide a new and improved method and apparatus for effecting a transfer of the web from a wound roll on one mandrel to an empty core on a succeeding mandrel.

It is an additional object and advantage of the invention to provide a new and improved means for use in combination with web winding equipment which means operate during the rotation of a principle support roll such as a bed roll for causing ejection and retraction of members such as knife blades, etc., from within the surface of the rotating support roll in order to perform functions during the winding operation.

2

In accordance with the method of the invention, a web is advanced in synchronism with a supporting roll and arranged in partial wrapping engagement therewith, thereafter running to a web roll being wound on a first mandrel. A transverse segment of the web in contact with the surface of the support roll is lifted to and supported at a first position outwardly disposed from the surface of the support roll during movement of the web along a portion of the path of the web travel. Adhesive is applied to at least portions of the lifted and supported transverse segment after which the transverse segment is further advanced along the path of web travel toward a pick-up position adjacent to which a successive core is positioned, rotatably supported upon a successive mandrel. The web is severed along a transverse line of severance in front of the transverse segment to form a tail end to the web being wound and an advancing leading end to the web to be wound. Substantially simultaneously therewith the transverse segment is urged outwardly to a second position more remote from the surface of the support roll and the adhesive-coated portions thereof are pressed into contact with the successive core upon which the web is to be wound. In this manner, web transfer is accomplished according to the invention.

Apparatus for accomplishing the method of the invention will be described in detail below and from the description it will be apparent that a large number of variations could be employed to accomplish winding in accordance with the invention. The preferred embodiment of the invention includes means for supporting a web traveling to a roll that is being wound, a plurality of rotatably mounted roll cores, means for successively moving rotatably mounted roll cores to a pickup position and to a winding position, means for lifting and supporting a transverse segment of the web at a first position outwardly spaced from the support means, means for applying adhesive to at least portions of the transverse segment while it is in the first position, means for severing the web along a transverse line in front of the transverse segment, and means for urging the transverse segment toward a second position more remote from the support means into contact with a fresh rotating roll core upon which the web is to be wound to commence the winding of a new roll. In accordance with the invention, the means for severing and the means for urging are preferably adapted for substantially simultaneous operation.

It is an advantage of the invention to provide a means for effecting transfer of a web by which the adhesive coated portion of the web adjacent the advancing leading edge of the web is positively pressed into engagement with the surface of a fresh roll core carried on a rotating mandrel. This insures a reliable attachment of the web to the core, assuring that the commencement of a new roll will begin. It is also believed to be an important feature of the invention that severance of the web from the roll being wound is not performed until the time of attachment of the web to a new core or, in some instances, shortly thereafter.

One feature of the invention which advantageously contributes to the success of the method of web transfer is the use of a new and improved operating mechanism as an element of the invention which moves members from positions within the rotating bed roll in a manner which has not been possible previously in high speed winders. The above, in part, renders the web transfer method of the invention practical and capable of superior performance heretofore unrealized and unexpected.

Additional objects and advantages of the invention will become apparent from the following detailed description thereof, read in conjunction with the accompanying drawings, in which:

FIGURE 1 is a side elevation view, partly schematic, illustrating the general layout of apparatus of the invention,

FIGURE 2 is a sectional elevation view of a glue metering and transferring device emloyed with the invention,

FIGURES 3, 4 and 5 are partial sectional views showing portions of the apparatus of FIGURE 2 and illustrating positions of the apparatus during various steps of the method,

FIGURE 6 is a bottom view of the apparatus shown in FIGURE 2 illustrating a modified embodiment thereof,

FIGURES 7 and 8 are schematic elevation views illustrating the combination of the apparatus shown in FIGURE 2 with different transfer means,

FIGURE 9 is a perspective view showing parts in section of a latched control mechanism employed with the invention,

FIGURE 10 is an elevation view illustrating the latched control mechanism at one position in its operation,

FIGURE 11 is an elevation view of a cam employed with the latched control mechanism of FIGURE 9 for accomplishing the method of the invention, and

FIGURES 12, 13, 14 and 15 are partial elevation views illustrating the position of various portions of the apparatus during sequential steps of the method of the invention.

General description of web winding method and apparatus

Referring to FIGURE 1 of the drawings, the apparatus shown comprises a rotatably mounted parent or mill roll **10** from which a web **11** is withdrawn and fed by means of a guide roll **12** into partial wrapping engagement with the surface **13** of a rotating support roll **14** over which the web **11** is advanced to a wound roll **16** rotatably carried by one of a plurality of mandrels **15**. The mandrels **15** are carried upon the arms **17** of a supporting winder turret **18** which is adapted for rotation, controllable by means of an indexing mechanism such as the type known as a Geneva mechanism. In this manner, the mandrels **15** are carried in revolution past a pickup position, indicated generally by reference numeral **19**, adjacent the surface **13** of support roll **14** and, hence, to a winding position, indicated generally by reference numeral **20**, spaced from the surface of the roll.

A glue metering and dispensing means, illustrated generally by reference numeral **21**, is positioned adjacent the surface **13** of support roll **14** between the pickup position **19** and the point where the web **11** running to the parent roll first contacts surface **13** of support roll **14**. Glue means **21** is adapted to separate a predetermined amount of adhesive from a glue reservoir and to extend it on a tongue member **22** toward the web to a position in which it may be picked up by the web **11** during a subsequent stage in the performance of the method of the invention. Details of glue metering and dispensing device **21** will be subsequently described with reference to FIGURES 2 through 8.

In accordance with the invention, means are provided to lift a transverse segment of the web **11** to a first position outwardly spaced from the surface **13** of support roll **14** to support the transverse segment in this position during a portion of the revolution of support roll **14**. During this portion of the revolution of support roll **14**, the web **11** is moved past a position of interference with the adhesive carried upon the tongue member **22** of glue metering and dispensing device **21** in order to accurately provide a predetermined amount of adhesive to a preselected portion of web **11**. Provision is further made in accordance with the invention for further urging and moving the transverse segment of the web **11** to a second position more outwardly spaced from surface **13** of roll **14** in which it will be pressed into contact with a fresh empty core carried by a succeeding mandrel **15**. Provision is also made to sever the web **11** in front of the transverse segment at a time substantially simultaneous with the pressing of the transverse segment into contact with the fresh core to form the tail end of the preceding wound roll and to commence the winding of a new web roll. In accordance with the invention, the lifting and supporting means **23** and severing means **24** are mounted internally of the support roll **14** and, by a new and improved operating mechanism (not shown in FIGURE 1), these means are controllably operated and ejected outwardly from the surface **13** of support roll **14** and retracted inwardly into the support roll **14** to perform their intended service.

Glue metering and transfer

Referring now to FIGURES 2 through 5 of the drawings, there is shown a housing indicated generally by reference numeral **30**, which includes a front wall **31** and a converging wall **32**, the plane of which is arranged to intersect the plane of front wall **31** at an angle of less than 90°. Two spaced side walls **33** connect with front wall **31** and converging wall **32** to define a chamber **34**, within which adhesive is retained. Converging wall **32** has a flexible portion **35** extending along and comprising its side portion which is disposed adjacent side wall **31** and in contact therewith when in the undistorted or relaxed and closed position. Strip **35** may be comprised of any type of flexible resilient material such as rubber which may be bent to one side or another out of the plane of converging wall **32** upon the application of force. Strip **35** may be sealingly attached to converging wall **32** as by a series of bolts **36**.

A tongue member **37** (number **22** in FIGURE 1), is disposed within the chamber **34** defined by the housing **30** and is mounted for reciprocation in a plane parallel and adjacent to the plane of front wall **31** so that its bottom surface **38** will be advanced toward and away from the line of intersection of the plane of front wall **31** with the plane of converging wall **32**. The bottom edge surface **38** is in a plane parallel to the line of intersection described above. In addition, the plane of bottom edge surface **38** is angularly disposed to the plane of front wall **31** and the plane of converging wall **32**. Bottom edge surface **38** terminates directly at a line of contact with front wall **31**.

The action of tongue member **37** is controlled by a valve **39** which governs the operation of a double action air cylinder **40**. The piston **41** of air cylinder **40** is operably connected to the end of tongue member **37** opposite bottom edge surface **38**. Valve **39** connects air line **42** to air cylinder **40** through feed lines **43** and **44**, alternatively. In other embodiments, the operation of valve **39** may be performed by hand or may be controlled by connecting it with the operation of other equipment such as the web handling machine or continuous winding machine (shown in FIGURE 1) for forming rolled paper products in a manner which is well known or understood in the art and employed with like equipment. Obviously, other types of actuation means could be employed.

In some instances, it is desired to dispense, with a device of this type, metered amounts of an adheive which is relatively fat-drying or which contains relatively volatile ingredient and, therefore, is susceptible to damage or deterioration upon prolonged exposure to air. It is also desired in some instances to continuously circulate glue through a heating means in order to maintain it at the desired viscosity for metering and application. As shown in FIGURE 2, glue may be circulated through the chamber **34** within housing means **30** by means of feeding it into chamber **34** through one or more inlets **45** on housing means **30** and withdrawing it from chamber **34** through one or more outlets (not shown) into opposite end on housing means **30**. In this manner, a heater (not shown) and/or a pump (not shown) may precede inlet **45** and be arranged to circulate glue from a remote supply

reservoir (not shown) through the housing means **30** in a continuous manner thereby insuring at all times a fresh supply of adhesive having the desired properties. The housing means **30** may be fitted with a lid (not shown) which sealingly covers the top portion thereof and is in frictional contact with the moving tongue member **37**.

FIGURES 3, 4 and 5 progressively illustrate the manner in which the adhesive metering and dispensing device of FIGURE 2 operates to dispense a predetermined amount of adhesive. In the light of the above-described structure, it can be seen that when the double action air cylinder **40** is actuated to reciprocably move tongue member **37** along the plane adjacent to front wall **31**, the bottom edge surface **38** will be reciprocably moved from a first position within the chamber **34** spaced from and out of contact with the converging wall **32**, as shown in FIGURE 3, through a second position wherein one edge bounding the surface **38** is in contact with converging wall **32** and, more specifically, the flexible portion **35** extending along and comprising the one side thereof, as shown in FIGURE 4. In this position, a reservoir or cavity **46** is defined by outline of the front wall **31**, the converging wall **32**, side walls **33** and the bottom edge surface **38** such that a metered amount of adhesive is separated and contained therein having a predetermined volume.

As operative movement of tongue member **37** continues prior to completion of one half of a cycle and a corresponding reciprocation, bottom edge surface **38** is moves to a third position wherein it is disposed outside of chamber **34** after the edge contacting the flexible portion **35** has exerted sufficient pressure upon the flexible portion to bend and deflect it downwardly and out of sealing contact with front wall **31**, as shown in FIGURE 5. In this position, the bottom edge surface **38** contains a predetermined metered amount of adhesive which is basically that portion of the adhesive contained within the supply reservoir or cavity **46** which was separated and defined by the portions of the front wall **31**, the bottom edge surface, the side walls **33**, and the converging wall **32**.

An advantageous feature of this apparatus is that the amount of adhesive separated in the manner described above can be closely controlled and easily controlled in an accurate manner. The principal manner of varying the amount resides in varying the thickness of tongue member **37** which results in a larger cross-sectional area for cavity **46**. Alternatively, and perhaps even more expeditiously, the angle of the bottom edge surface **38** may be varied relative to front wall **31** and converging wall **32** to change the volume of a resulting cavity **46** formed during operation.

FIGURE 6 illustrates a modified form of the metering and dispensing device and is a bottom view of the device shown in FIGURE 2. In this embodiment, converging wall **32** has a plurality of flexible portions **50** positioned in spaced relation to each other and separated by a plurality of inflexible integral portions **51** of converging wall **32** which intersect and contact front wall **31** to form a seal. Tongue member **37** has a plurality of spaced slots cut upwardly through the bottom edge surface **38** and corresponding to the integral portions **51**. This results in the formation of a plurality of separate tongue member **37** of narrow width which are passed outward of chamber **34** upon movement of piston **31** through the joint between the flexible portions **50** and front wall **31**.

In operation, the bottom edge surface **38** of each tongue member **37** carries a predetermined amount of adhesive out from the supply chamber **34**. The application of this adhesive to a surface results in an intermittent treated line.

From the above, it can be seen that the apparatus described in several embodiments accomplishes separation of a metered amount of adhesive from a supply contained within a supply reservoir and transfers it to a remote position for application to a web. In accordance with the invention, the tongue member **37** carrying a metered amount of adhesive thereon, may be advanced into a position of interference with the lifted and supported transverse segment of a moving web, whereupon adhesive transfer occurs.

FIGURES 7 and 8 illustrate two alternative methods for handling the metered amount of adhesive after its separation from the parent supply in order that it may be transferred to the desired portion of the surface of a moving paper web. FIGURE 7 contemplates employing with the adhesive metering and dispensing device **21** a separate transfer means which in the embodiment shown comprises a rotatably mounted cylinder **53** positioned between the bottom edge surface **38** of a tongue member **37** of a metering device and the surface of a moving paper web **54** which represents the surface to which adhesive is to be applied. Web **54** is supported in partial wrapping engagement with the surface of a rotatably mounted supported roll **55**. Cylinder **53** has a protuberance **55** extending outwardly from its surface which protuberance extends longitudinally from one end of roll **53** to the other. The relationship of transfer roll **53** is such that, upon rotation, protuberance **56** is moved past a position of interference with the outwardly extending bottom surface **38** of tongue member **37** of the metering and dispensing device. Upon contact, the protuberance serves as a transfer bar and wipes the metered amount of adhesive from the bottom edge surface **38**. Upon further rotation, the transfer bar or protuberance **56** contacts the preselected portion of the surface of moving web **56** and applies or transfers a metered amount of adhesive to the web. It can be seen that the movement and timing of contact of the web by transfer bar **56** may be controlled in a manner whereby it bears some relationship to movement of the web or another work piece, as is understood in the art.

FIGURE 8 illustrates another embodiment of apparatus involving the metering and dispensing device shown in FIGURE 2 for transferring the measured amount of adhesive contained on bottom edge surface **38** to a desired surface. As shown in FIGURE 9, an actuation means such as double action air cylinder **58** is attached to front wall **31** of the housing **30** of a metering and dispensing device **21** and is arranged to advance and withdraw the entire metering and dispensing device **21** to a position where the bottom edge surface **38** of an outwardly extending tongue member **37** containing a metered amount of adhesive thereupon would contact a desired surface such as the surface of a moving paper web **34** at a predetermined time. In a manner similar to that employed in FIGURE 7, a moving paper web **54** could be supported in partial wrapping engagement with a rotatably mounted support roll **55**. A valve **59** is arranged to control the operation of double action air cylinder **58** by means of air from line **60** fed through line **61** or line **62**. Air cylinder **58** would advance and withdraw the bottom edge surface **38** into contact with the surface of the moving web **54** at a predetermined time whereby accomplishing adhesive transfer.

Latched cut-off mechanism

Referring now to FIGURES 9 and 10, support roll **14** has an elongate slot or opening in the surface thereof cut in a direction substantially parallel to the axis of the roll **14** and forming a cavity in the roll **14** into which a knife **24** and a resilient support member **23** are movably positioned substantially parallel to each other. The knife **24** and the support member **23** are carried by holders **65** which are mounted upon a plurality of arms **66** positioned along the length of support roll and fixedly secured by means of a bolt **68** to a rocker shaft **67** passing through and journaled within the ends of the support roll **14** of selective rotation. Holders **65** are advantageously formed of a resilient material such as light gauge spring steel so as to

provide a resilient support for the web **11**, the usefulness of which will be subsequently pointed out.

An arm **70** is located beyond the end of support roll **14** and is similarly fixedly mounted upon and secured to rocker shaft **67** by means of a bolt **71**. Arm **70** as an extension **72** to which is rotatably attached a cam follower **73**. Cam follower **73** rests upon a camming surface **75** formed by a stationary cam **76** which is mounted upon and fixed to stationary shaft **77** which carries journal bearings upon which support roll **14** is rotatably mounted. Spring bias means **78** are located within support roll **14** and adapted to continuously urge arms **66** outwardly in order to project knife **24** and resilient member **23** outwardly through the opening in the surface **13** of the support roll shell **14**.

Arm **70** has a hook portion **80** extending downwardly alongside end of support roll **14** and adjacent to but spaced from stationary cam **76**. Hook portion **80** is arranged so that, absent from any influencing force, it is caught by the latch end **79** of a latch member **81** pivotably attached by a pin **82** to a rotating end portion of the support roll. The opposite end **84** of latch member **81** is under constant bias pressure toward the axis of support roll **14** by means of a spring **83** disposed between an upstanding projection **85** secured to the end of support roll **14** and end **84**. This causes latch end **79** of latch member **81** to be moved radially outwardly from the shaft **77** when not otherwise restrained. When the portion of stationary cam **76** having the largest radius is beneath the cam follower **73**, the latch end **79** will exert substantially no retaining force upon hook portion **80** since movement of hook portion **80** is prevented by cam follower **73** upon cam **76**. However, when cam follower **73**, during revolution of support roll **14**, rides upon the portion of stationary cam **76** having a lesser radius, latch end **79** exerts a holding force on hook portion **80** and prevents outward movement of knife member **24** and resilient support member **23** in response to urging by the spring bias means **78** carried within support roll **14**.

Provision is made in accordance with the invention to automatically prevent engagement of latch end **79** with hook portion **80** at a predetermined point during the operation of the winding apparatus whereby outward movement of knife **24** and resilient support member **23** is permitted in response to urging by spring bias means **78**. Accordingly, a movable dog **86** is positioned in a cutout **87** through stationary cam **76** and operatively attached to a solenoid **88** which is connected electrically to the winder controls (not shown) extension or movement toward the end of roll **14** at predetermined points during the winding process.

In this manner, the dog **86** is axially advanced into a position of interference with an outwardly dependent portion **89** on the latch end **79** of the rotating latch member **81** so that, as the latch member **81** is carried in revolution by the support roll **14**, the upper surface **90** of the depending portion **89** on the latch end **79** thereof collides with the dog **86**, causing latch end **79** to be forced inwardly toward axis of stationary shaft **77** at the point where, in normal operation, it had previously engaged hook portion **80** to prevent the forward movement of hook portion **80** and upward movement of knife **24** and resilient support member **23**. Thus, during the next cycle or revolution of the support roll **14**, the knife **24** and the resilient support member **23** are permitted to respond to the path dictated by the shape of the stationary cam **76** upon the cam follower **73** rides since hook portion **80** is not engaged by latch end **79** as long as the dog **86** remains extended toward the end of roll **14**.

In accordance with one feature of the invention, it can be seen from the above that the mechanism described provides a new and improved means for controlling the operation of operative members carried in openings within the surface of a rotating drum or cylinder. It will be readily apparent that the mechanism described will have use with a large variety of mechanical equipment, that the stationary cam **76** may be shaped in a variety of ways in order to effect movement of these members at precisely predetermined points or locations on the arc path of the support roll.

FIGURE 11 illustrates the desired shape of a stationary cam **76** used in accordance with the method of the present invention and it will be noticed that the camming surface portion of lesser distance from the axis of stationary shaft and subsequently into a second camming surface portion of even lesser distance from the axis of the stationary shaft. At the first shelf, the knife **24** advanced toward the position where the knife edge is substantially flush with the surface **13** of the support roll **14** while the resilient member **23** advances to a position outwardly spaced from the surface **13** of the support roll **14**. This is from ¼ inch to about 1 inch outward from the surface **13** of the support roll **14**. In this position, as will be seen from a more detailed description of the method of the invention, the web **11** is supported by the resilient support means **23** into a position of interference with the extended tongue **22** of the glue metering and dispensing device **21** so as to receive the application of a metered amount of adhesive in the desired area.

At this point, the cam follower **73** drops into the second depressed camming surface portion of stationary cam **76** and permits movement of the knife **24** to a position outwardly spaced from the surface **13** of the support roll **14** and movement of the resilient support member **23** to a second position more remote from the surface **13** of the support roll **14** than was the first position. Again, as will be described in greater detail subsequently, this movement is arranged to occur at the precise point during the revolution of the support roll **14** at which the knife has moved through the pickup position **19** and the transverse segment having adhesive thereon is adjacent the fresh core on a succeeding mandrel **15**. The second position now held by the resilient support means **23** is located such that the support means **23** presses the transverse segment of the web **11** carried thereon into contact with a fresh core and simultaneously the knife blade **24** transversely severs the web **11** to form a tail on the web of the preceding wound roll **16**.

Description of operation

The critical steps of the method of the invention as performed by apparatus of the invention as illustrated above are shown by partial schematic views in FIGURES 12, 13, 14, and 15. Referring to FIGURE 12, the position of the knife **24** and the resilient support means **23** may be seen as the cam follower **73** rides upon the highest portion of the stationary cam **76** or when the latch end **79** of latch member **81** is engaged with the hook portion **80** which forces the knife **24** and the supporting member **23** to hold the same position. FIGURE 13 illustrates the manner in which dog **86** applies a camming action to the latch end **79** of latch member **81** to prevent hooking engagement of end **79** with hook member **80** of arm **70**. It will be apparent that this action only occurs upon advancement of dog **86** by the solenoid or other actuating means.

FIGURE 14 illustrates the position of the knife and the resilient support member as the cam follower **73** moves into the first depressed portion or shelf area on stationary cam **76** after the dog **86** has been advanced into an interfering position with the upper surface **90** of depending portion **89** on the latch end **79** of latch member **81**. Here it can be seen that the knife **24** rides flush with the surface **13** of support roll **14** and resilient support member **23** holds the web **11** in a position outwardly spaced from the surface **13** of support roll **14**, in which position the web **11** contacts the extended tongue **22** of glue metering and dispensing device **21**. In this manner, the adhesive carried on the tongue **22** is transferred to the web **11** at the desired location.

Looking now at FIGURE 15, the position of the knife **24** and the resilient support member **23** may be seen after

the cam follower 73 has dropped into the second depressed portion or shelf area of stationary cam 76. Here it can be seen that the resilient support 23 has thrust the transverse segment of web 11 into contact with the surface of a fresh core carried by a succeeding mandrel at the pickup position while the knife 24 has substantially simultaneously severed the web 11 in front of the transverse segment to which adhesive was applied. In this manner, the winding of a new roll 16 is commenced.

From the above description, it will be apparent that various modifications can be made in the details of the apparatus described therein without departing from the spirit and scope of the invention. For example, many different means could be employed to lift and support transverse web segments above the surface of the rotating support roll. The description is for purposes of illustration of the invention and is not intended to limit the scope of the invention except as may be required by the claims.

What we claim is:

1. In a continuous winding process, a method for effecting transfer of a moving flexible web running in partial wrapping engagement over a support roll to a web roll being wound on a first core to a second core to start the winding of another web roll, which comprises lifting and supporting a transverse segment of the web to a first position outwardly spaced from the surface of said support roll, applying adhesive to at least portions of said lifted and supported transverse segment, advancing said transverse segment toward a pickup position, and simultaneously severing said web along a transverse line of severance in front of said transverse segment to form a tail end to the web being wound and an advancing leading end to the web to be wound and urging said transverse segment outwardly to a second position more remote from the surface of said support roll into contact with a fresh rotating core upon which the web is to be wound to commence the winding of a new roll.

2. A method according to claim 1, wherein said lifted and supported segment is substantially parallel with the axis of said support roll.

3. A method according to claim 1, wherein said first position is radially outwardly spaced between about ¼ inch and 1 inch from the surface of said support roll.

4. A method according to claim 1, wherein said second position is radially outwardly spaced between about ½ inch and 2 inches from the surface of said support roll.

5. A method according to claim 1, wherein said transverse segment is lifted and supported above the surface of said support roll through an arc path traveled by said support roll of up to about 300 degrees.

6. Apparatus for transferring a moving flexible web to a roll core to start the winding of a web roll while the web is traveling to a roll that is being wound, comprising support means for supporting the web traveling to the roll, a plurality of rotatably mounted roll cores, means for successively moving said rotatably mounted roll cores to a pickup position and to a winding position, means for lifting and supporting a transverse segment of the web to a first position outwardly spaced from said support means, means for applying adhesive to at least portions of said transverse segment while in said first position, means for severing said web along a transverse line in front of said transverse segment, and means for urging said transverse segment toward a second position more remote from said support means into contact with a fresh rotating roll core upon which the web is to be wound to commence the winding of a new roll.

7. Apparatus according to claim 6, wherein said means for severing and said means for urging are adapted for substantially simultaneous operation.

8. Apparatus according to claim 6, wherein said support means comprise a rotatably-mounted cylindrical shell, and said lifting and supporting means are carried within said shell and disposed beneath the outside surface of said shell, said lifting and supporting means being adapted for outward advancement through at least one opening in the surface of said shell into said first and second positions, and said apparatus includes means actuating said lifting and supporting means.

9. Apparatus according to claim 8, wherein said means actuating said lifting and supporting means comprise a stationary cam, a cam follower operably attached to said lifting and supporting means and latch means allowing said cam follower to contact the camming surface of said stationary cam only during predetermined revolutions of said cylindrical shell.

10. Apparatus according to claim 9, wherein said cam follower is rotatably mounted upon and fixedly connected to a rocker shaft extending transversely through said roll by a rocker arm, said rocker shaft is fixedly connected to said lift and supporting means, said latch means include a latch member biased into hooking engagement with said rocker arm, and said apparatus includes control means for selectively preventing engagement of said latch member with said rocker arm during predetermined revolutions of said support roll.

11. Apparatus according to claim 10, wherein said latch member is carried in revolution on the end of said support roll, and said control means include a dogging member movable into the path of said latch member to prevent hooking engagement of said rocker arm and means to advance and withdraw said dogging member at preselected times.

References Cited

UNITED STATES PATENTS

2,512,900	6/1950	Kwitek	242—56.6
2,769,600	11/1956	Kwitek et al.	242—56.6
3,128,057	4/1964	Barnhart et al.	242—56
3,179,348	4/1965	Nystrand et al.	242—56

WILLIAM S. BURDEN, *Primary Examiner.*