GAS FLOW MONITOR

Filed Dec. 8, 1964

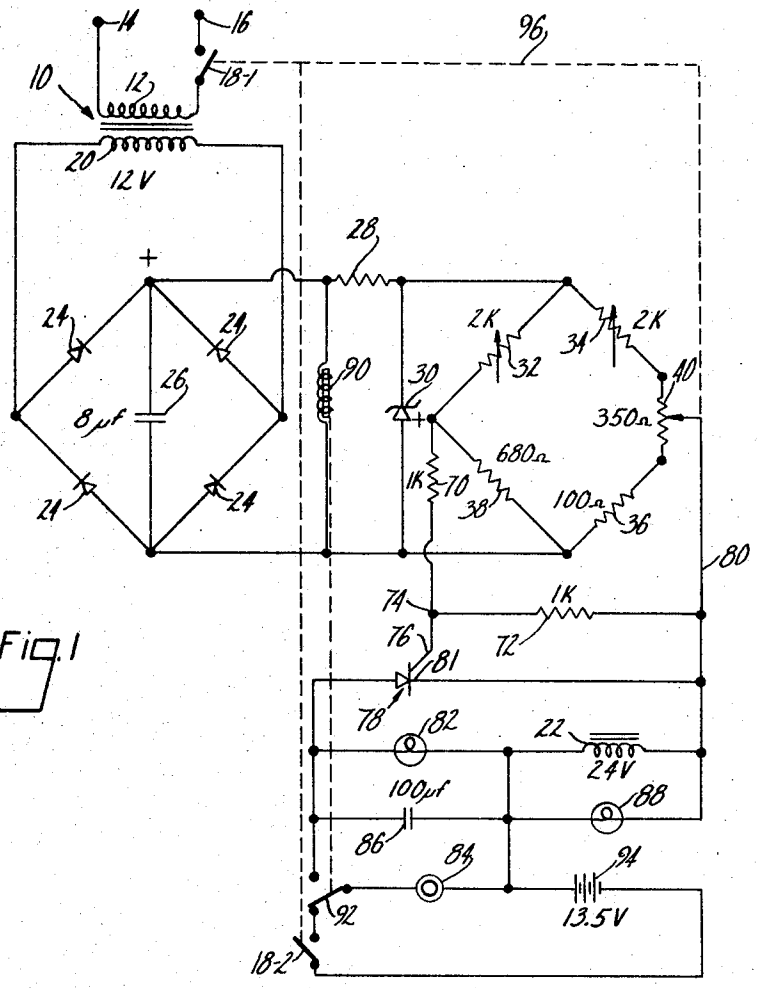

Fig. 1

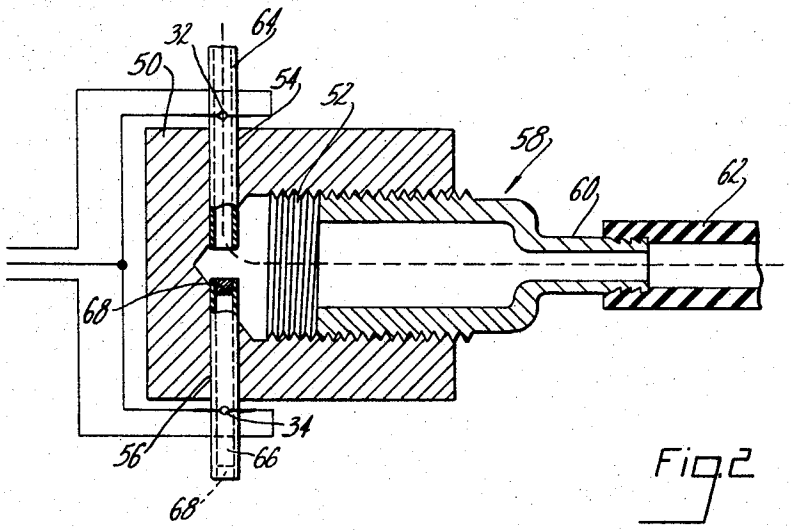

Fig. 2

United States Patent Office

3,368,212

Patented Feb. 6, 1968

1

3,368,212
GAS FLOW MONITOR

Stephen D. Klyce, Harvard, Mass.; Stephen D. Klyce, Jr., executor of said Stephen D. Klyce, deceased, assignor to J. H. Emerson Company, Cambridge, Mass., a corporation of Massachusetts

Filed Dec. 8, 1964, Ser. No. 416,777
7 Claims. (Cl. 340—239)

ABSTRACT OF THE DISCLOSURE

A system for supervising the respiration of a patient includes a brass block having a main threaded bore for connection to a respiration sensing device and two transverse channels which intersect the main bore. A 0.053 inch I.D. nylon tube in each channel supports a thermistor. One tube is blocked and the other tube is exposed to gas flow through the main bore. The two thermistors are connected in a bridge circuit which controls, via a silicon controlled rectifier, an audible alarm oscillator and a pilot light to operate the alarm and light whenever gas flow due to the patient's breathing falls below a preestablished value. A power failure alarm operates the oscillator only should system power fail.

This invention relates to electronic condition detection apparatus and more particularly to electronic apparatus for monitoring flow conditions.

It is frequently desirable to monitor gas flow in a manner which introduces minimal interference with the gas flow condition being supervised. For example, in the care and treatment of infants or other patients who may need respiratory support, it is not always possible to have a nurse in attendance. In connection with the treatment of such patients, it would be desirable to provide an arrangement whereby the respiration of the patient could be continuously monitored, and should an abnormal condition develop, an alarm would be generated which would call for prompt assistance to the patient by a nurse, for example. Such apparatus should be capable of accurately monitoring the flow condition while not interfering with the air flow in the breathing circuit of the patient. As each patient must be individually monitored, the monitoring apparatus should be simple and relatively economical, while capable of adjustment to supervise the relatively wide range of gas flow conditions which may be encountered in such applications.

Accordingly, it is an object of this invention to provide novel and improved apparatus for monitoring the breathing conditions of a patient.

Another and more general object of the invention is to provide novel and improved gas flow detection apparatus which is reliable and effective in operation and yet relatively simple and economical in construction.

In accordance with the invention there is provided a gas flow monitor employing a thermally responsive gas flow sensing element. The sensing element is connected in electrical circuit in one leg of a bridge type of sensing circuit. A corresponding compensating thermally responsive element is preferably connected in the adjacent leg of the bridge sensing circuit and provides compensation for changes in ambient conditions to which the gas flow detector apparatus is exposed. One diagonal of the bridge circuit is energized from a suitable DC energizing source, and an output signal derived from the other diagonal of the bridge circuit is applied to a gate controlled asymmetrically conductive device (silicon controlled rectifier). In the particular embodiment described hereinafter in detail, the output signal from the bridge circuit is applied between the gate electrode and the cathode electrode of

2

the rectifier device. Facility for adjustment of the bridge circuit enables compensation for the pressure of the gas flow condition to which the sensing element is to be exposed. Output or alarm devices are connected directly in series with the gate controlled device and a power source, and when the bridge output signal applied to the gate controlled device permits that device to conduct, the output device or devices are energized and signal the sensed change in flow condition. The apparatus is sensitive and responds to gas flow changes of relatively small magnitude while sensing only a fraction of the total gas flow required for adequate breathing, for example. In addition, the apparatus readily may accommodate a warning circuit which operates when the supply power fails, for example. Apparatus constructed in accordance with the invention is simple to adjust and operate. It is relatively economical to manufacture and is reliable in operation. Gas flow rates as low as a few cubic centimeters per minute may be monitored at pressures as low as 0.001 inch of water. While the invention has particular utility for monitoring the breathing conditions of patients, it also has general utility in monitoring of other gas flow conditions, as in industrial operations.

Other objects, features and advantages of the invention will be seen as the following description of a particular embodiment thereof progresses, in conjunction with the drawing, in which:

FIG. 1 is a schematic diagram of the gas flow detector constructed in accordance with the invention; and

FIG. 2 is a diagrammatic view of the mounting of the sensor element employed in conjunction with the system indicated in FIG. 1.

The gas flow monitor apparatus shown in the schematic diagram of FIG. 1 employs a dual secondary step-down transformer **10** which has its primary winding **12** arranged for connection to a 110 volt source via terminals **14**, **16**. Switch **18–1** controls the application of energy to transformer **10**, and that transformer, when energized, produces a twelve volt signal as an output from one secondary winding **20** and a twenty-four volt signal from its other secondary winding **22**. The twelve volt signal is applied to a full wave bridge rectifier circuit which includes four diodes **24**. A smoothing capacitor **26** is connected across one diagonal of that bridge circuit. The output signal from that diagonal of the bridge is transmitted through resistor **28** and regulated by Zener voltage regulator diode **30** for application to the monitor bridge circuit that includes two identical temperature variable resistance elements **32**, **34**, two fixed resistance elements **36**, **38**, and a potentiometer **40**. The rectified DC signal from the bridge rectifier circuit is connected to one diagonal of the monitor bridge and an output signal voltage is extracted from the other diagonal of that bridge.

Both variable resistance elements **32**, **34** are thermistors, and their resistance characteristics change as a function of the temperature to which they are exposed. The thermistors are self-heated to above any forseeable ambient temperature so that the temperature of the air flowing by the sensing bead portion does not affect accuracy. Element **32** is the gas flow sensing element and is directly exposed to a fraction of the gas flow to be monitored, while element **34** is a compensating element and is connected in the bridge circuit so that its change in resistance, in response to changes in ambient conditions to which the monitoring apparatus is exposed, compensates for corresponding changes in the resistance of monitor element **32** produced by ambient changes.

The monitor thermistor **32** is disposed in a portion of the gas stream which is to be supervised by means of the mounting arrangement shown in FIG. 2. That mounting includes a thermally conductive block **50** of brass which has a main threaded longitudinal bore **52** that extends ap-

proximately two-thirds the length of the block, and two transverse channels 54, 56 which intersect the main bore adjacent its bottom. A coupling 58 is threadedly secured in bore 52 and has an extension portion 60 to which a rubber tube 62 or other suitable conduit is attached. Tube 62 is connected to the bypass gas flow extracting element—a needle disposed in the gas flow line to be supervised, for example. Nylon tubes 64, 66 are inserted in channels 54, 56, respectively, and in each tube is disposed one of the thermistors, thermistor 32 being disposed in tube 64 and thermistor 34 being disposed in tube 66. Each nylon tube has an I.D. of 0.053" and receives the thermistor bead that is 0.043" in diameter. The two thermistors thus are supported in symmetrical insulated relation on block 50. Tube 64 is unblocked and forms a part of the flow passage for the portion of the gas flow to be sensed, but tube 66 has plugs 68 in each end. Thus, the two thermistors are identically mounted closely adjacent heat sink block 50, but only the sensing thermistor 32 is exposed to gas flow, which flow may take place in either direction along the path indicated by dashed lines.

The illustrated apparatus is useful for monitoring gas flow produced by breathing of a patient, and in such monitoring only a small fraction of the total gas flow produced by the patient is monitored so that the possible interference with breathing is nonexistent. The monitor may be coupled to a pneumograph which encircles the patient's chest or may be inserted directly in the patient's breathing circuit if such breathing is being supported mechanically. For example, a hose through which the gas is flowing may be pierced with a needle which is connected to tube 62 for conducting a minor portion of the air flow in the hose past the monitoring thermistor 32 to cause a temperature drop therein. With the mounting of sensor element 32 as shown in FIG. 2, less than 0.1% of the air used by the patient is lost.

This monitor bridge has an output circuit that includes series resistor 70 and parallel resistor 72. (For increased sensitivity these resistors may be omitted and the value of resistor 38 changed to 470 ohms.) The junction 74 of those two resistors is connected to the gate electrode 76 of silicon controlled rectifier 78, while the other line 80 of the bridge output circuit is connected to the cathode electrode 81 of the silicon controlled rectifier. In series with the silicon controlled rectifier 78 is the twenty-four volt secondary 22 of transformer 10 and a group of parallel devices which include an alarm light 82, an audible alarm oscillator device 84 sold under the trademark "Sonalert," and a smoothing capacitor 86 to improve the operation of the audible alarm. A pilot light 88 is connected across secondary winding 22.

In operation of the apparatus, when switch 18–1 is closed, power is applied via secondary 20 and the diode bridge rectifier to the monitor bridge. (Pilot lamp 88 is energized by secondary 22 as a visual indication that the apparatus is energized.) Monitor element 32 is disposed in a bypass of the gas flow to be monitored, and potentiometer 40 is adjusted until the audible alarm 84 is first sounded. The device is then attached to a pneumograph or other air flow source. Any air flow past the sensor 32 will cause its temperature and resistance to drop, thereby decreasing the voltage applied to the gate 76 and causing the silicon controlled rectifier 78 to cease firing and shut off the alarm. If the air flow by the sensor 32 decreases, the sensor's resistance and temperature increases, causing the voltage to gate 76 to increase and the silicon controlled rectifier to fire and sound the alarm 84. Potentiometer 40 is adjusted to a position of greater circuit insensitivity if the flow and/or pressure to be measured is greater. For monitoring intermittant flow such as breathing, the potentiometer 40 is adjusted to a sufficiently insensitive point so the alarm does not sound between breaths. The thermistors 32, 34 preferably are also large enough to retain sufficient heat to cause a delay before the silicon controlled rectifier fires, so that it does not fire between breaths. In other applications where gas flow is in one direction, the gas flow is preferably through block 50 prior to passing thermistor 32 so as to reduce the effect of transient variations in temperature of the gas flow.

A power failure alarm may be connected in the circuit through the provision of relay coil 90 which controls contacts 92 and a battery 94. Switch 18–2, which is operated simultaneously with line switch 18–1, completes the circuit between battery 94 and oscillator 84. However, relay coil 90 is immediately energized and opens contacts 92 so that the oscillator circuit is not energized from battery 94. Should power fail, relay 90 will be deenergized and contacts 92 close so the oscillator 84 is energized and produces an audible alarm. It will be noted that the battery 94 is connected in circuit only under power failure conditions and the only circuit component connected to the battery 94 on such conditions is the audible alarm oscillator 84 so that the battery drain is minimal. (In the preferred embodiment the control for potentiometer 40 is mounted on the same shaft as the control for switches 18–1, 18–2 and this coupling is indicated by dashed line 96.)

While a particular embodiment of the invention and modifications thereof have been shown and described, still other modifications thereof will be obvious to those of ordinary skill in the art, and therefore, it is not intended that the invention be limited to the disclosed embodiment or to details thereof, and departures may be made therefrom within the spirit and scope of the invention as defined in the claims.

What is claimed is:

1. Gas flow monitoring apparatus comprising a resistance bridge circuit having four legs and defining two diagonals,

an electrical resistance element disposed in each leg of said bridge, one of said resistance elements having a resistance characteristic that varies as a function of the temperature of the resistance element,

a second one of said resistance elements being identical to said one resistance element and connected in a different leg of said bridge circuit to compensate for changes in ambient temperature to which said first resistance element is exposed,

a mounting structure for said two identical resistance elements comprising a thermally conductive mass having a gas flow passage therethrough for connection to the gas flow to be monitored,

means supporting said one resistance element in said gas flow passage in close proximity to but spaced from said thermally conductive mass, and

means supporting said second one of said resistance elements outside said gas flow passage but otherwise in a similar position relative to said thermally conductive mass,

circuit means for applying an energizing signal across one diagonal of said bridge,

a gate controlled asymmetrically conductive device having first and second main circuit terminals and a gate terminal,

means connecting said gate terminal and one of said main circuit terminals across the other diagonal of said bridge, and

an indicator device connected between said first and second main circuit terminals.

2. The apparatus as claimed in claim 1 and further including adjustment means in said bridge circuit for varying the electrical resistance in two of said bridge legs to control the conduction of said asymmetrically conductive device.

3. Gas flow monitoring apparatus comprising a gate controlled asymmetrically conductive device having first and second main circuit terminals and a gate electrode,

an output device for providing an indication of the sensed gas flow condition,

means connecting said main circuit terminals and said output device in series,

a monitor bridge circuit coupled to said gate electrode of said asymmetrically conductive device,

said monitor bridge circuit having four legs and including a gas flow sensing element connected in one leg of said bridge circuit, said element having an electrical characteristic that varies as a function of the gas flow past said sensing element,

a second element having an electrical characteristic identical with said gas flow sensing element connected in a second leg of said bridge circuit to compensate for changes in ambient temperature to which said gas flow sensing element is exposed,

means to energize said monitor bridge circuit, and

a mounting structure for said two identical elements comprising a thermally conductive mass having a gas flow passage therethrough for connection to the gas flow to be monitored,

means supporting said gas flow sensing element in said gas flow passage in close proximity to but spaced from said thermally conductive mass, and

means supporting said second element outside of said gas flow passage but otherwise in a similar position relative to said thermally conductive mass.

4. Gas flow monitoring apparatus comprising a transformer having a primary winding and two secondary windings,

rectifier means coupled to one of said secondary windings,

a gate controlled asymmetrically conductive device having first and second main circuit terminals and a gate terminal,

an output device for providing an indication of the sensed gas flow condition,

means connecting said first and second main circuit terminals, said output device, and the other of said secondary windings in series,

a monitor bridge circuit coupled between said rectifier means and said gate terminal of said asymmetrically conductive device,

said monitor bridge circuit having four legs and including a first resistance element connected in one leg of said bridge circuit, said first element having a

resistance characteristic that varies as a function of the temperature of the resistance element, a second resistance element identical to said first resistance element connected in said bridge circuit to compensate for changes in ambient temperature to which said first resistance element is exposed, and

a mounting structure for said first and second resistance elements comprising a thermally conductive mass having a gas flow passage therethrough for connection to the gas flow to be monitored,

means supporting said first resistance element in said gas flow passage in close proximity to but spaced from said thermally conductive mass, and

means supporting said second resistance element in corresponding position relative to said thermally conductive mass.

5. The apparatus as claimed in claim **4** wherein each said resistance element support means is a plastic tube,

the tube supporting said first resistance element defining a portion of said gas flow passage, and

the tube supporting said second resistance element being blocked to prevent gas flow past said second resistance element.

6. The apparatus as claimed in claim **4** and further including an auxiliary power source connected for energizing only said output device,

relay means including contacts in circuit with said auxiliary source, and

means responsive to the energization of said transformer to operate said relay means and move said contacts to open the circuit between said auxiliary source and said output device.

7. The apparatus as claimed in claim **4** wherein each of said identical resistance elements is a thermistor.

References Cited

UNITED STATES PATENTS

2,439,331	4/1948	Bean	340—333
2,499,806	3/1950	Wouk et al.	340—237
3,258,655	6/1966	Pinckaers	317—148.5

JOHN W. CALDWELL, *Primary Examiner.*

MAX L. LEVY, NEIL C. READ, *Examiners.*

D. MYER, *Assistant Examiner.*