Jan. 30, 1968

A. O. TOFTE

APPARATUS FOR MIXING OF BLEACHING AGENTS INTO CELLULOSIC PULP

Filed Feb. 28, 1966

3,366,367

Fig. 1

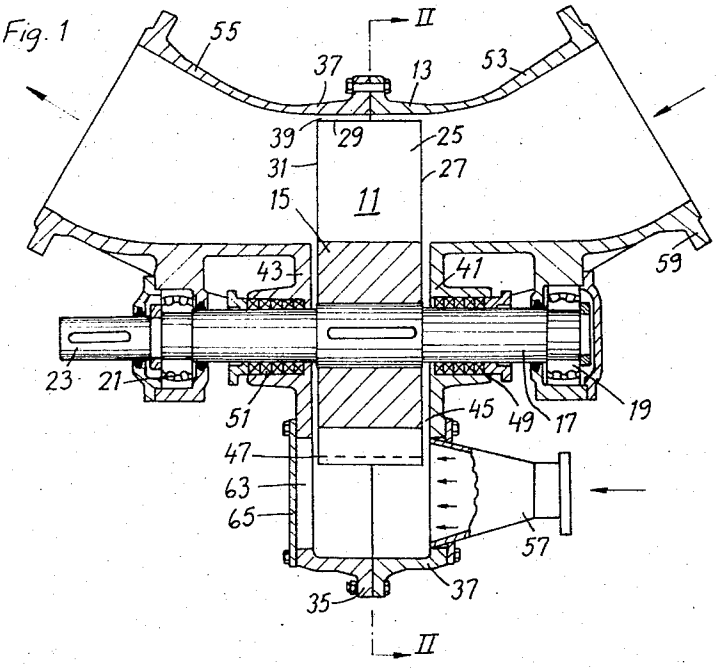

Fig. 2

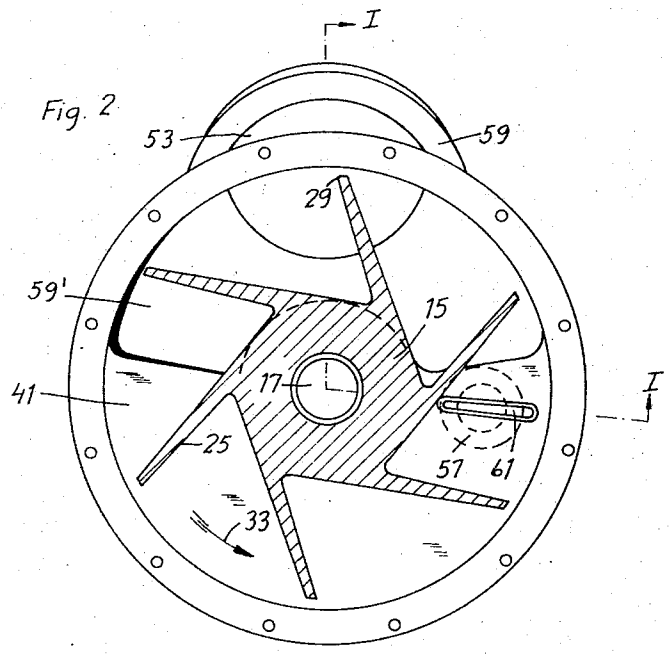

Inventor
Arne Olav Tofte
By Cushman, Darby & Cushman
Attorneys

United States Patent Office

3,366,367

Patented Jan. 30, 1968

1

3,366,367
APPARATUS FOR MIXING OF BLEACHING AGENTS INTO CELLULOSIC PULP

Arve Olav Tofte, Karlstad, Sweden, assignor to Aktiebolaget Kamyr, Karlstad, Sweden, a company of Sweden

Filed Feb. 28, 1966, Ser. No. 530,483
Claims priority, application Sweden, Mar. 5, 1965, 2,863/65
4 Claims. (Cl. 259—9)

ABSTRACT OF THE DISCLOSURE

An improved mixing apparatus utilizes a rotary vane wheel to mix a bleaching agent into successive layers of cellulosic pulp as the pulp is rotated past an inlet through which the bleaching agent is introduced. The bleaching agent inlet may have the configuration of a narrow sector of a circular zone on a plane past which the rotary vane wheel sweeps, and the pump may be delivered into and out of the rotating vane wheel through orifices which are essentially coextensive.

The invention relates to an apparatus for mixing of bleaching agents into cellulosic pulp, particularly high-density pulp, by means of a rotary vane wheel towards which pulp supplied through a pulp inlet is conveyed in such a manner as to bring the pulp to pass axially between the vanes while taking part in the rotation of the vane wheel.

The object of the invention is to cause successive layers of the pulp supplied through the pulp inlet to move with a great velocity past an orifice through which a bleaching agent is supplied, in order thereby to spread the bleaching agent into the pulp evenly and efficiently. The characterizing feature of the apparatus according to the invention whereby said object is reached, consists in that a casing surrounding the vane wheel comprises a plane wall perpendicular to the axis of the wheel and situated closely up to the vane wheel and laterally of the pulp inlet, the orifice of a bleaching agent inlet being located in said wall and the vane wheel being arranged to move the pulp with the full speed of the wheel along said wall and past said orifice.

Other features of the invention will appear from the following description of an embodiment of a mixing apparatus which is shown in the accompanying drawing and to which the invention is applied. FIG. 1 is a longitudinal sectional view taken along the broken line I—I in FIG. 2, and FIG. 2 is a cross-sectional view taken along the line II—II in FIG. 1.

The mixing apparatus comprises a rotary vane wheel **11** inserted in a surrounding casing **13**. The hub **15** of the vane wheel is keyed to a shaft **17** supported by ball bearings **19**, **21** and the end **23** of which is adapted for connection to a motor. A number of vanes **25** preferably integral with the hub project outwardly therefrom. Each of said vanes has the shape of a thin flat plate with two opposite rectangular broad faces and three narrow edge faces **27**, **29**, **31**. The edge faces **27** of all the vanes are situated in one and the same plane which is perpendicular to the axis and also coincides with one plane end face of the hub of the vane wheel. The same applies to the edge faces **31** at the opposite end of the vane wheel. The vanes may be truly radial, preferably however, they are directed somewhat forwardly in the direction of rotation of the vane wheel, as indicated by the arrow **33** in FIG. 2, so that they are tangentially or radially-tangentially attached to the hub **15**. The edge faces **29** run parallelly to and all at the same distance from the axis so that they

2

all describe the same cylindrical surface during the rotation of the vane wheel.

The casing **13** is composed of two symmetrical halves joined by means of a flange connection **35**. On opposite sides of and next to the plane of division the casing has a cylindrical wall **37** which is concentric to and closely surrounds the vane wheel so that merely a very small interspace **39** is formed between said wall **37** and the parallel edges **29** of the vanes. Perpendicular to the cylindrical wall **37** and to the shaft of the vane wheel there are two plane parallel walls **41**, **43** which between themselves embrace the vane wheel so that merely very narrow interspaces **45**, **47** are left open between said walls and the opposed plane end faces of the vane wheel. The shaft **17** extends through said walls **41**, **43** and is sealed thereto by means of stuffing boxes **49**, **51**.

The above-described casing further comprises a pulp inlet **53**, a pulp outlet **55** and a bleaching agent inlet **57**. The pulp inlet **53** ends with an orifice **59'** in the wall **41**, which orifice has the approximate configuration of a sector of the circular zone or annular area described by the edges **27** of the vanes. The extension of said sector corresponds to a centre angle of about 120 to 180 degrees. Therefore the remaining part of the wall **41** has the shape of a central complete circular area of a diameter equal to that of the hub **15**, which over an angle of 240 to 180 degrees is integral with a circular sector of a greater diameter. The pulp inlet **53** is formed with a circular flange **59** for connection to a pulp supply conduit, the inlet constituting a somewhat curved transition piece, the cross-section of which gradually changes from circular shape to sector shape. The pulp outlet **55** is shaped similarly to the inlet and has a sector-shaped orifice preferably coextensive and situated opposite to the orifice **59** at the other side of the vane wheel.

The axially directed bleaching agent inlet **57** opens out into the wall **41**. The orifice **61** thereof is sector-shaped and extends transversely over the annular area of the wall swept over by the edges **27** of the vanes. The orifice **61** is elongated and the two long sides are radially directed.

The other plane wall **43** of the casing is formed with an aperture **63** located opposite to the orifice **61**. Said aperture which is normally covered by a lid **65**, makes it possible to move the bleaching agent inlet **57** to the other side when local conditions require, or to use two bleaching agent inlets simultaneously.

When pulp that is pumped in through the inlet **53** reaches the vane wheel, successive layers thereof will be caught by the vane edges **27** and forced to take part in the rotation of the vane wheel. The axial extension of the vane wheel is so great that it is not possible for the pulp to follow the vane wheel merely with a reduced speed, which would involve agitation by the vanes. As the vane edges move past the sharp border edge of the orifice **59** and the wall **41**, successive batches of the pulp will be confined into completely closed compartments formed between the vanes and the walls **41**, **43**, **37** of the casing, the pulp therefore being forced to sweep over the wall **41** at a rate accurately determined by the speed of rotation of the vane wheel. As the pulp batches are moved past the orifice **61**, the bleaching agent is spread into the pulp with the correct radial distribution. After any particular pulp batch has followed the vane wheel during a number of revolutions, the same is pushed out through the pulp outlet **55**, the continuous pressure feed of the pulp through the inlet **53** causing a step-wise axial displacement of the pulp confined between the vanes each time a particular compartment is placed between the opposed sector-shaped orifices of the pulp inlet and outlet.

I claim:

1. In apparatus for mixing of bleaching agents into

cellulosic pulp, particularly high-density pulp, said apparatus being of a type having a casing enclosing a driven vane wheel which has a plurality of vanes disposed substantially radially about an axis of rotation of said vane wheel and including means for mounting and rotating the vane wheel within the casing, said apparatus further having a pulp inlet for admitting pulp axially between the vanes of the wheel in a sector of the vane wheel, while it is rotating, so that pulp is carried between the vanes of the wheel during rotation of the wheel, the improvement comprising:

the casing having a plane wall perpendicular to the axis of rotation of the vane wheel and located closely to the vane wheel and laterally of the pulp inlet, said plane wall having an orifice therethrough for receiving bleaching agent which is admitted through an inlet into said casing, said vane wheel being arranged to move pulp along said plane wall and past the orifice of the bleaching agent inlet, said orifice of the pulp inlet having a configuration of a sector of the circular zone described by one end edge of each vane of the wheel, said sector extending over a centre angle of 120 to 180 degrees.

2. In apparatus for mixing of bleaching agents into cellulosic pulp, particularly high-density pulp, said apparatus being of a type having a casing enclosing a driven vane wheel which has a plurality of vanes disposed substantially radially about an axis of rotation of said vane wheel and including means for mounting and rotating the vane wheel within the casing, said apparatus further having a pulp inlet for admitting pulp axially between the vanes of the wheel in a sector of the vane wheel, while it is rotating, so that pulp is carried between the vanes of the wheel during rotation of the wheel, the improvement comprising:

the casing having a plane wall perpendicular to the axis of rotation of the vane wheel and located closely to the vane wheel and laterally of the pulp inlet, said plane wall having an orifice therethrough for receiving bleaching agent which is admitted through an inlet into said casing, said vane wheel being arranged to move pulp along said plane wall and past the orifice of the bleaching agent inlet, said bleaching agent inlet being axially directed with its orifice in said plane wall having the approximate configuration of a narrow sector of the circular zone of said wall swept over by the end edges of the vanes of the wheel.

3. In apparatus for mixing of bleaching agents into cellulosic pulp, particularly high-density pulp, said apparatus being of a type having a casing enclosing a driven vane wheel which has a plurality of vanes disposed substantially radially about an axis of rotation of said vane wheel and including means for mounting and rotating the vane wheel within the casing, said apparatus further having a pulp inlet for admitting pulp axially between the vanes of the wheel in a sector of the vane wheel, while it is rotating, so that pulp is carried between the vanes of the wheel during rotation of the wheel, the improvement comprising:

the casing having a plane wall perpendicular to the axis of rotation of the vane wheel and located closely to the vane wheel and laterally of the pulp inlet, said plane wall having an orifice therethrough for receiving bleaching agent which is admitted through an inlet into said casing, said vane wheel being arranged to move pulp along said plane wall and past the orifice of the bleaching agent inlet, said casing being provided with an outlet for pulp mixed with bleaching agent, the orifice of said outlet being opposite and coextensive to the orifice of the pulp inlet, and said casing further having a second plane wall laterally of said pulp outlet orifice and perpendicular to the axis of the vane wheel and situated closely up to the vane wheel.

4. Apparatus according to claim 3, characterized in that the vanes extend substantially radially and tangentially from the hub of the wheel, and have plane broad faces which are parallel to the shaft and of an axial extension differing very little from the distance between the two plane walls of the casing.

References Cited

UNITED STATES PATENTS

1,409,827	3/1922	Callahan	259—7
2,514,254	7/1950	Paulus	259—9

FOREIGN PATENTS

100,006	5/1962	Norway.

WALTER A. SCHEEL, *Primary Examiner.*

JOHN M. BELL, *Assistant Examiner.*