Dec. 26, 1967 K. H. GUTNER 3,360,075

BED LADDER HOOK

Filed June 30, 1966

FIG. 1

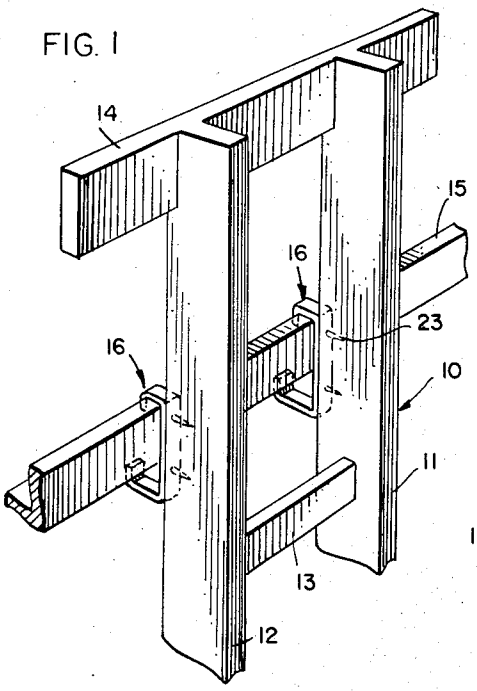

FIG. 2

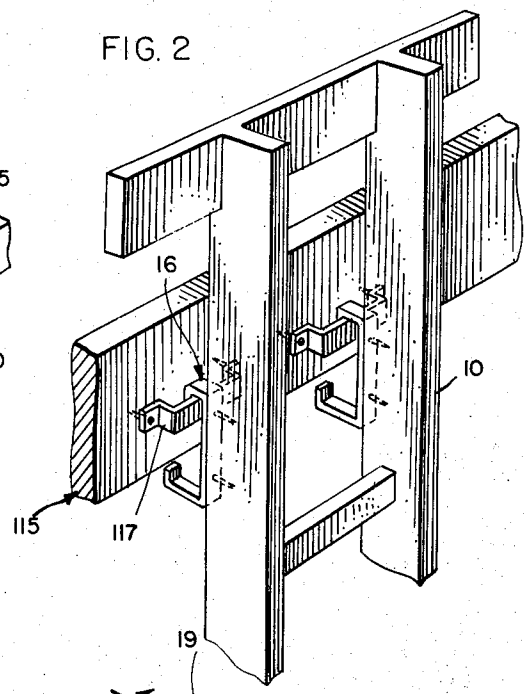

FIG. 3

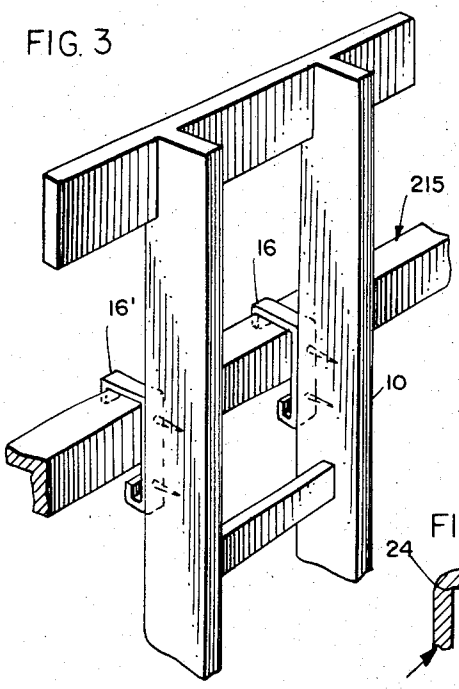

FIG. 4

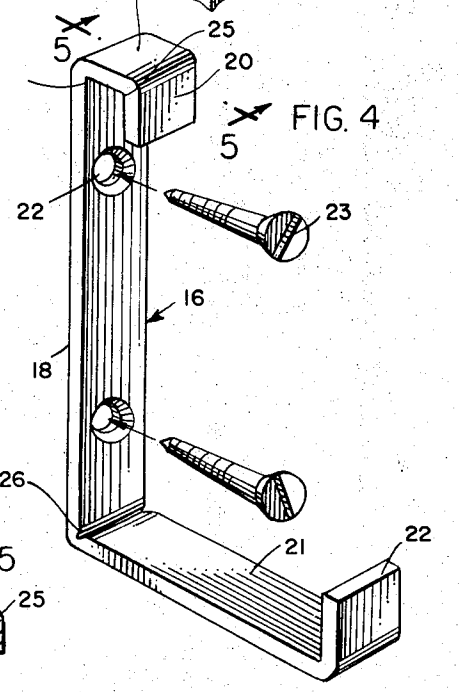

FIG. 5

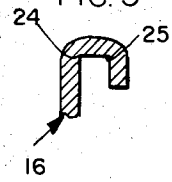

INVENTOR:
KENNETH H. GUTNER
BY

Dawson, Tilton, Fallon, Lungmus & Alexander
ATT'YS

United States Patent Office

3,360,075

Patented Dec. 26, 1967

1

3,360,075
BED LADDER HOOK

Kenneth H. Gutner, 591 Roger Williams,
Highland Park, Ill. 60035

Filed June 30, 1966, Ser. No. 562,959
1 Claim. (Cl. 182—106)

ABSTRACT OF THE DISCLOSURE

A bed ladder hook useful in mounting a ladder on a bunkie-type bed which has a right angle configuration equipped with transverse creases developed during the forming of the hook.

Bed ladders have a tendency to slide or tip and for that purpose hooks are installed which releasably anchor the ladder to the bed. The inventive hook is quite versatile, being adapted to anchor a ladder to a variety of beds such as the angle-iron rail bed, the link-spring bed and the bunkie-type bed. In each of these instances, the anchorage is secure against movement and the provision of such a hook constitutes an object of this invention. This is particularly advantageous in ladders that are rounded since these tend to pivot undesirably. Other objects and advantages of the invention may be seen in the details of construction and operation as set down in this specification.

The invention is explained in conjunction with an illustrative embodiment in the accompanying drawing, in which—

FIG. 1 is a fragmentary perspective view of a ladder and bed wherein the inventive hook is used to couple a ladder to an angle-iron rail of a bed;

FIG. 2 is a fragmentary perspective view of a bed ladder and bed combination wherein the inventive hook is employed to couple the ladder to a bunkie-type bed;

FIG. 3 is a fragmentary perspective view of a bed ladder and bed combination wherein the inventive hooks are employed to couple the ladder to a bed having a link-spring type construction;

FIG. 4 is an exploded perspective view of the inventive hook and its associated screw means; and

FIG. 5 is a fragmentary sectional view taken along the sight line **5—5** applied to FIG. 4.

In the illustration given and with particular reference to FIG. 1, the numeral **10** designates generally a ladder equipped with the usual longitudinally-extending rails **11** and **12**, and rungs as at **13**. The upper end of the ladder **10** is equipped with a guard as at **14**. The ladder **10** is seen to be temporarily installed or mounted on an angle-iron rail **15** of a bed (not shown). For this purpose, the ladder **10** is equipped with hooks generally designated **16**.

The showings in FIGS. 2 and 3 are essentially similar to that just described with respect to FIG. 1. In each case, a ladder **10** is detachably mounted to a bed (not shown). In FIG. 2, the bed in question is a so-called bunkie bed having a substantial side including a wood portion as at **115** and which is seen to be equipped with generally U-shaped clips **117** for engagement by the hooks **16**.

In FIG. 3, the bed in question is equipped with a link-spring frame as at **215**. The showing in FIG. 3 differs from that in FIGS. 1 and 2 additionally in the orientation of the hooks which are designated **16'**.

Irrespective of the orientation of the bed ladder hooks, the configuration is that as seen in FIGS. 4 and 5 and the hook is seen to include a bight portion **18** adapted

2

to abut the inner side of a given longitudinally-extending rail. At its upper end, as shown in FIG. 4, the hook **16** is equipped with an integral, horizontally-extending arm portion designated **19** and which is seen to be generally L-shaped in side elevation, to provide a terminal part as at **20**, which extends in the direction of the lower arm portion **21**. The lower arm portion **21** also extends horizontally and is also L-shaped, having a terminal part as at **22** projecting toward the upper arm portion. As with the arm portion **19**, the arm portion **21** is integral with the bight portion **18**. The bight portion **18** is seen to be apertured and counter-sunk as at **22** for the receipt of wood screws **23** to secure the hook to its associated ladder rail.

The upper arm portion (as shown in FIGS. 1, 2, 4 and 5), is equipped with creases in the metal of construction, i.e., steel, as at **24** and **25**, the creases **24** and **25** extending essentially transverse of the length of the relatively elongated hook **16**. In this fashion, I form a shape with essentially right-angled corners in the area of the creases, which develops an advantageous stabilizing action. Heretofore, the ladders in bed installations had a tendency to pivot or tip about the hooks or rails so as to lack essential stability. I also eliminate the curvature in the other arm portion as at **26** and **27** relative to arm portion **21**. Thus, the inventive arrangement applies to all the installations shown. Even further, the invention finds advantageous use in a bracket with only one arm portion.

While in the foregoing specification a detailed description of an embodiment of the invention has been set down for purpose of illustration, many variations of the details herein given may be made by those skilled in the art without departing from the spirit and scope of the invention.

I claim:

A bed ladder hook comprising a relatively elongated unitary metal member having a bight portion adapted to be secured to a bed ladder and be disposed generally vertically when the ladder is disposed generally vertically, said member including an upper arm portion extending generally horizontally from the upper end of said bight portion and integral therewith, said arm portion being generally L-shaped to provide a terminal part extending toward the other end of said main portion said arm portion being formed with a pair of transverse creases confronting the other end of said main portion to develop a right-angle configuration in said arm portion, said creases being located at the juncture of said main portion and said arm portion and the juncture of said terminal part with the remainder of said arm portion, the horizontal dimension between said bight portion and the terminal part of said arm portion being at least about ¼″ whereby said member is mountable on said bed ladder with said arm portion uppermost to engage a clip provided on the side rail of the bunkie bed and maintain said bed ladder in its generally vertical orientation.

References Cited

UNITED STATES PATENTS

2,570,365	10/1951	Michael et al.	248—304 X
2,675,982	4/1954	Budy	248—211
2,764,383	9/1956	Wood	248—301 X
2,993,672	7/1967	Bower et al.	248—211
3,008,534	11/1961	Von Canon	182—106
3,159,369	12/1964	Wiczer	248—301 X
3,312,115	4/1967	Braselmann	248—410

CASMIR A. NUNBERG, *Primary Examiner.*