Nov. 14, 1967 W. N. SUTLIFF ET AL 3,352,359

APPARATUS FOR STEAM TREATING A DEEP WELL

Filed June 10, 1965 3 Sheets-Sheet 1

Fig. 1.

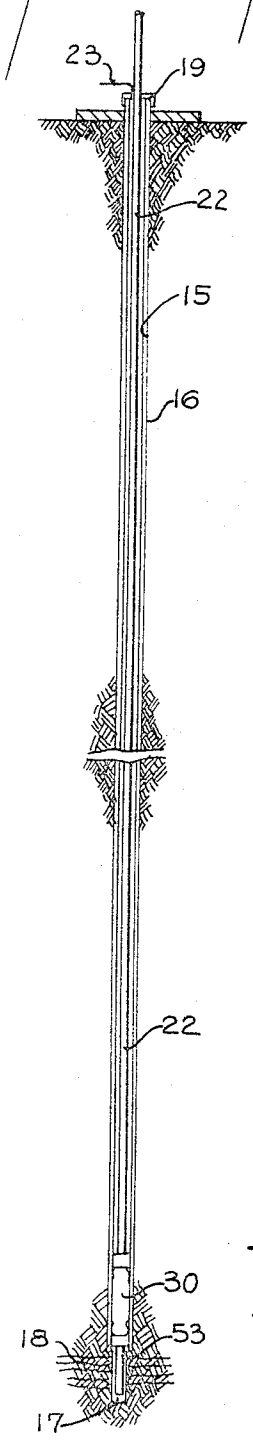

Fig. 2a.

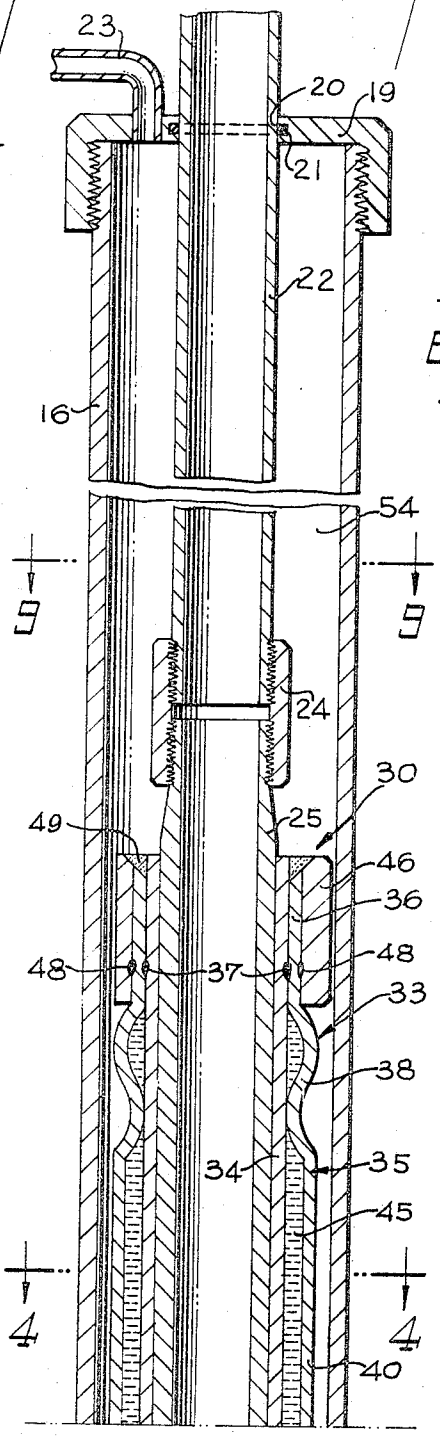

Fig. 2b.

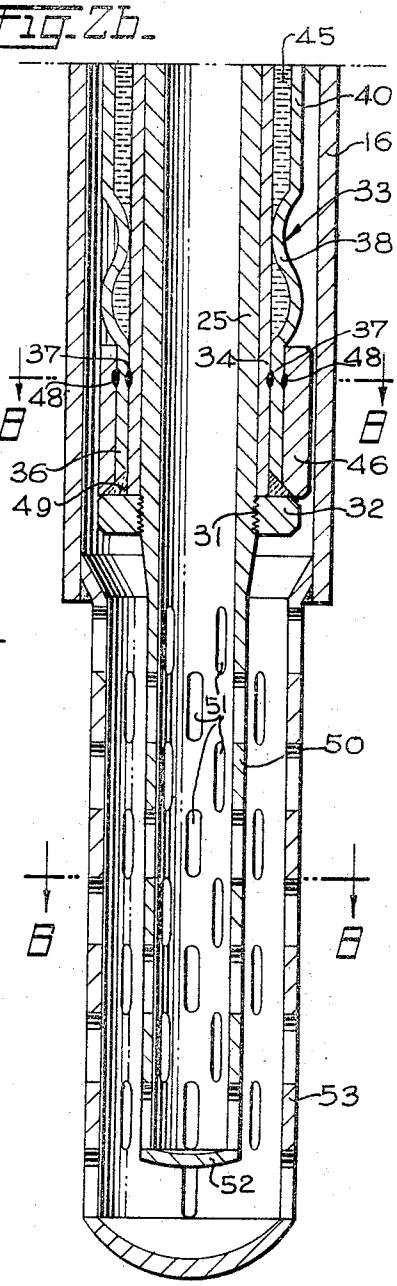

WAYNE N. SUTLIFF &
MERYL W. SUTLIFF,
INVENTORS.

BY

ATTORNEY.

APPARATUS FOR STEAM TREATING A DEEP WELL

Filed June 10, 1965 3 Sheets-Sheet 2

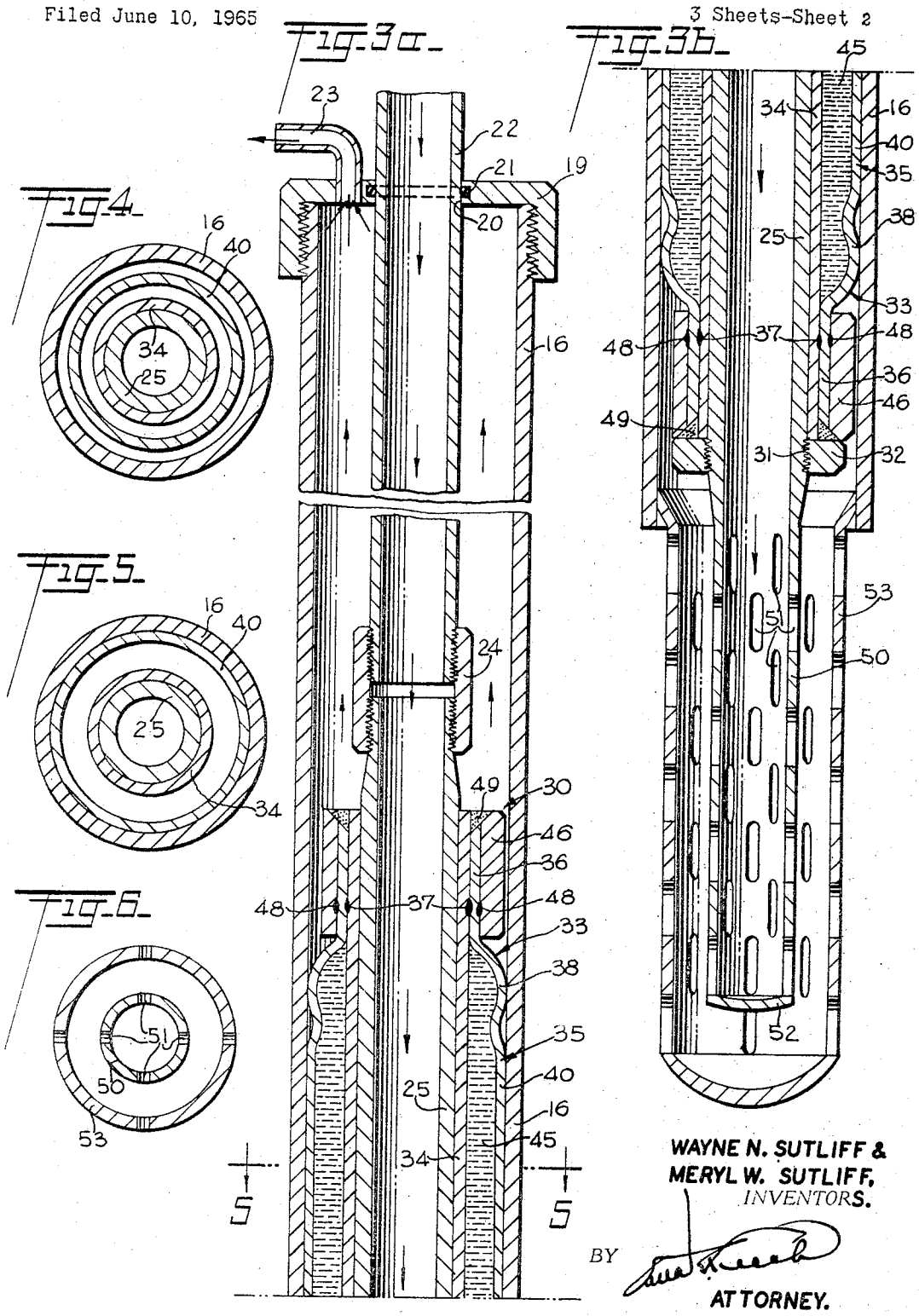

WAYNE N. SUTLIFF &
MERYL W. SUTLIFF,
INVENTORS.
BY
ATTORNEY.

APPARATUS FOR STEAM TREATING A DEEP WELL

Filed June 10, 1965 3 Sheets-Sheet 3

Fig. 7

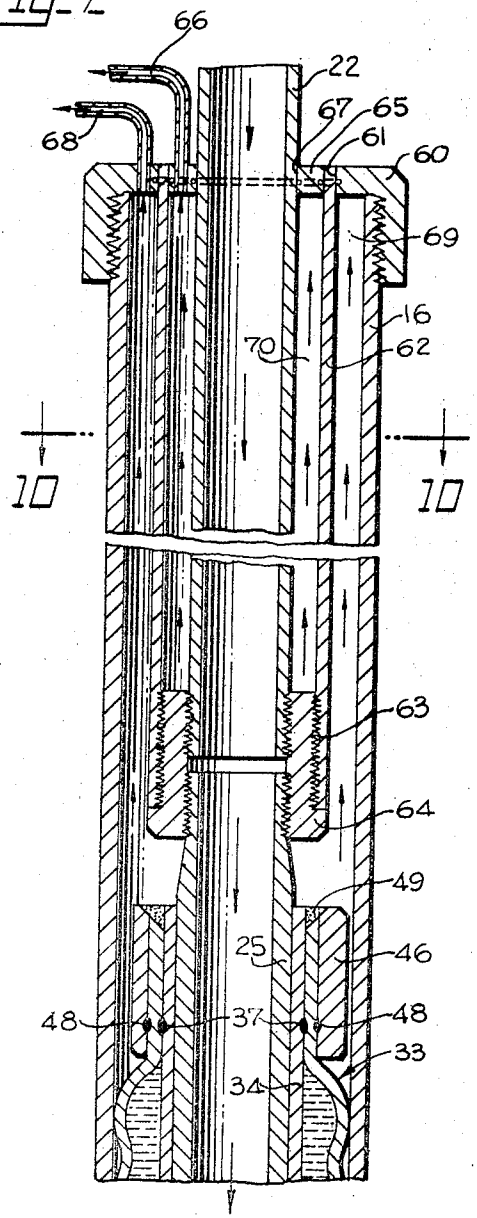

Fig. 8

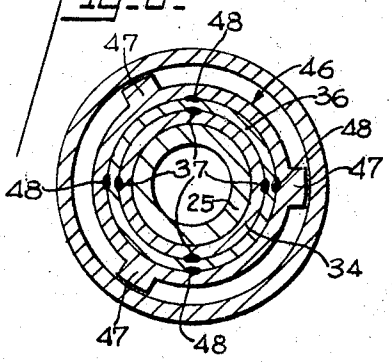

Fig. 9

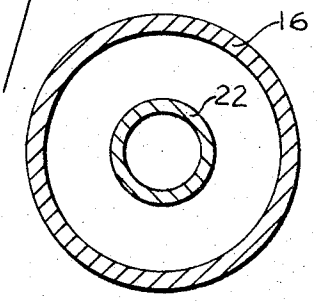

Fig. 10

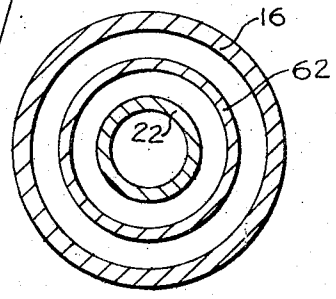

WAYNE N. SUTLIFF &
MERYL W. SUTLIFF,
INVENTORS.

BY
ATTORNEY.

United States Patent Office

3,352,359

Patented Nov. 14, 1967

1

3,352,359
APPARATUS FOR STEAM TREATING A DEEP WELL

Wayne N. Sutliff and Meryl W. Sutliff, Bakersfield, Calif., assignors to St. Louis Janitor Supply Co., doing business as Navy Brand Manufacturing Company, St. Louis, Mo., a corporation of Missouri

Filed June 10, 1965, Ser. No. 462,925
4 Claims. (Cl. 166—53)

ABSTRACT OF THE DISCLOSURE

The invention is used in an oil well having a well casing and a casing head at the upper end thereof, and includes a steam pipe which extends downwardly through the casing head making a tight fit therewith, said steam pipe terminating at its lower end in an oil bearing stratum for delivery of steam into the latter under high pressure. A thermal responsive packer surrounds the lower end portion of the steam pipe and responds to being heated by the steam by expanding into contact with the casing thereby sealing off the area between the steam pipe and the casing and thereby confining the steam delivered downwardly through the pipe to the oil bearing stratum being treated. Means is also provided for producing a vacuum around the steam pipe throughout its length to insulate said pipe against loss of heat radially therefrom.

BACKGROUND OF THE INVENTION

(1) *Field of the invention*

The art of increasing the productivity of a deep oil well and particularly to lowering the viscosity of the oil in the oil bearing strata of the well by steam treating the latter.

(2) *Description of the prior art*

The general modus operandi of steam treating a deep well is to force large quantities of steam at high pressure and temperature into the oil bearing strata of the well so as to decrease the viscosity of the oil and thereby increase the rate at which said oil may be recovered. Examples of this operation are disclosed in the cited U.S. patents to P. J. Closmann et al. Nos. 3,221,813 and 3,280,909.

SUMMARY OF THE INVENTION

The present invention seeks to attain a relatively high degree of heat efficiency in the application of steam treating to deep oil wells by providing a novel and highly efficient thermo-responsive packer which surrounds the lower end of the steam pipe and which contains a thermo-responsive material such as water or paraffin. The heating of this material by steam delivered downwardly through the steam pipe expands the tubular metal sleeve confining this material, which is of a relatively ductile metal such as aluminum, until this sleeve has expanded into packing relation with the casing and effectively seals off the space between the steam pipe and the casing thereby confining the steam delivered downwardly through the steam pipe to the oil bearing stratum directly therebelow.

The invention also includes a means for jacketing the steam pipe in a vacuum throughout its length whereby radiation of heat from the steam pipe is greatly reduced, thereby permitting steam to be delivered with increased efficiency and relatively small drop in temperature to the oil bearing stratum of the well.

BRIEF DESCRIPTION OF THE DRAWING

FIG. 1 is a diagrammatic vertical sectional view of an oil well and illustrates a preferred embodiment of the present invention installed therein.

2

FIG. 2 (embracing FIGS. 2*a* and 2*b*) is an enlarged vertical sectional view of FIG. 1 and illustrates the packer of the apparatus of the invention with the expansible jacket thereof in retracted condition as when introduced into the well.

FIG. 3 (embracing FIGS. 3*a* and 3*b*) is a view similar to FIG. 2 and shows the packer jacket of the invention as when expanded into sealing engagement with the well casing.

FIG. 4 is a cross-sectional view taken on the line **4—4** of FIG. 2*a*.

FIG. 5 is a cross-sectional view taken on the line **5—5** of FIG. 3*a*.

FIG. 6 is a cross-sectional view taken on the line **6—6** of FIG. 2*b*.

FIG. 7 is a view similar to FIG. 3*a* and illustrates a modified embodiment of the present invention in which an auxiliary vacuum insulation sleeve is provided for the steam pipe of the invention.

FIG. 8 is a cross-sectional view taken on the line **8—8** of FIG. 2*b*.

FIG. 9 is a cross-sectional view taken on the line **9—9** of FIG. 2*a*.

FIG. 10 is a cross-sectional view taken on the line **10—10** of FIG. 7.

Referring specifically to the drawings and particularly to FIG. 1, the invention is there shown as installed in a deep well **15**, having a casing **16**, the lower portion **17** of said well extending below said casing into an oil bearing stratum **18**. The upper end of the casing **16** has a casing head **19** provided with a central opening **20** having an O-ring **21** to form a seal between said opening and a steam pipe **22** of the invention which slidably fits said hole and extends downwardly therethrough to the lower end of the casing **16**. The casing head **19** also has a vacuum pipe **23**, the purpose of which will be explained hereinafter. A short distance above the lower end of the casing **16**, the steam pipe **22** connects through a coupling **24** with the upper end of a relatively heavy-walled tubular mandrel **25** which constitutes a continuation downwardly of the steam pipe **22** and offers a means by which a packer **30** of the invention is supported on said steam pipe. Near its lower end, the mandrel **25** is provided with threads **31** on which is screwed a jacket supporting nut **32**. Closely surrounding the mandrel **25** and supported for lengthwise expansion thereon by the nut **32** is a radially thermo-expansive packer jacket **33**. This jacket is preferably made of a ductile metal, such as aluminum, and includes inner and outer concentric tubes **34** and **35**. The inner tube is cylindrical in form and closely slidably fits the mandrel **25**. The outer tube **35** has end portions **36** which closely fit the corresponding portions of the inner tube **34** and are welded thereto as by spot welding **37**. The outer tube **35** has annularly convoluted portions **38** just inwardly from said end portions thereof, and a central cylindrical section **40** which is spaced radially from the inner tube **34** to provide an annular space **45**. Snugly fitting onto the end portions **36** of outer tube **35** are a pair of annular guide shoes **46** having radially projecting lugs **47** which slidably engage the interior surface of the casing **16** so as to maintain the packer **30** in centralized relation with the casing while being introduced into the well. The guide shoes **46** are secured in place, after the packer jacket **33** has thus been assembled by spot welding **48**. The shoes **46** and components of the jacket are then united by annular welding **49** applied at each end of the jacket so that the annular space **45** is hermetically closed. Prior to the assembly of packer jacket **33**, however, a quantity of thermo-responsive material such as water or paraffin is placed in the annular space **45** so that this space is substantially filled therewith.

As shown in FIG. 2, the central section **40** of the outer

tube **35** of the packer jacket **33**, when in its contracted condition is closely spaced from the inner surface of the casing **16**.

The tubular mandrel **25** is preferably integrally connected at its lower end with a relatively thin walled tube **50** having multiple perforations **51**, and being closed at its lower end by a plate **52**.

Before the steam pipe **22** is inserted into the casing **16**, the latter may be provided with a perforated liner **53** which is generally suspended from a lower portion of the casing **16** and extended downwardly into the lower portion **17** of the well. When the steam pipe **22**, with the packer **30** suspended thereon, is then extended into the well, the lowering of the pipe is halted when the packer reaches the position in which this is shown in FIG. 2 and in which the downwardly extending perforated tube **50** provided on the lower end of the packer extends into the perforated liner **53**. Thus the interior of the steam pipe **22** connects through the perforations **51** with the interior of the perforated liner **53** and through the perforations in the latter with the lower portion **17** of the well **15**.

OPERATION

In preparing to operate the apparatus above described in performing the method of the present invention, suitable means (not shown) are provided for delivering large quantities of steam at high temperature and pressure to the upper end of the steam pipe **22** and a high capacity evacuating pump is provided and connected to the vacuum pipe **23**. At the start of the operation, steam is delivered downwardly through the steam pipe **22** so that this flows outwardly through the perforations **51** in tube **50** and through the perforations of the liner **53** into the lower portions **17** of the well **15** and, the packer **30** not as yet being set, this steam flows upwardly past said packer and into the space between the casing and the steam pipe where this steam is condensed by the low temperature of the casing so as to provide a semi vacuum in the space **54** within said casing and surrounding said steam pipe. As the casing gets warmed up so that the steam is not condensed, this is drawn off from the upper end of the space **54** through the vacuum pipe **23**.

The flow of steam just mentioned gradually raises the temperature of the steam pipe **22** to a point well above the melting or vapor point of the thermo-responsive material contained within the annular space **45** within the packer jacket **33**. As this temperature rises, said material vaporizes and produces a high pressure within the space **45** which expands the outer tube **35** of the packer jacket **33** until this tightly conforms to the inner surface of the casing **16** as shown in FIGS. 3 and 5 thereby sealing off the lower end of the annular space **54** formed within the casing **16** around the pipe **2**. With the packer **30** thus set against the inner face of the casing **16**, any return upwardly of the steam delivered downwardly through steam pipe **22** is prevented and the delivery of further steam down said pipe builds up a very high steam pressure within the lower portion **17** of the deep well **15**. This steam is thus caused to penetrate the oil bearing strata **18** forming the walls of this lower well portion.

To assist in conserving the steam used in this operation and increasing the over-all efficiency of the apparatus, the evacuator connected to vacuum pipe **23** is maintained in operation and a relatively high vacuum is drawn on the annular space **54** to which the vacuum pipe **23** connects. The effect of this vacuum is of course to insulate the steam pipe **22** and substantially inhibit radiation of heat therefrom. It is thus possible to deliver steam at a much higher temperature into the lower end of the well **15** than would otherwise be possible and to continue to deliver steam at this temperature with a minimum loss through radiation of heat from the steam pipe **22**.

When the teratment above described of the deep well **15** has continued for the desired length of time, the delivery of steam to the steam pipe **22** is halted which results in the gradually cooling of the steam pipe and the packer **30** until the temperature of the latter is below the condensing or solidifying temperature of the material which substantially occupies the annular space **45** of the packer **30**. When this decrease in temperature has occurred, the vacuum produced thereby in annular space **45** contracts the outer tube **35** away from contact with the casing **16** and thus permits the ready withdrawal of the steam pipe **22** and packer **30** from the well **15**.

Referring now to FIGS. 7 and 10, a modified form of the above described apparatus of the invention is illustrated in which the upper end of casing **16** is covered by a casing head **60** having a central opening **61** for slidably receiving an auxiliary vacuum insulating sleeve **62**, the lower end of which screws onto external threads **63** of a coupling **64** which take the place of the coupling **24** in the apparatus. The upper end of sleeve **62** has an internal collar **65** which is fitted with a vacuum pipe **66** and has an axial hole **67** which slidably receives the steam pipe **22**. The casing head **60** is also equipped with a vacuum pipe **68** which communicates with the space **69** formed between casing **16** and sleeve **62**.

In the operation of the modified form of apparatus just described, the vacuum pipe **68** connects to the power evacuator above described as connecting with vacuum pipe **23** and a separate evacuator (also not shown) is provided which connects with vacuum pipe **66**. During the operation of the modified apparatus both of these evacuators are power driven to separately impose an approximate vacuum on both the space **69** and the space **70** which is formed between the insulating sleeve **62** and the steam pipe **22**. An auxiliary vacuum insulation heat barrier is thus formed immediately about the steam pipe **22** which augments the insulating effect of the approximate vacuum also maintained in the space **68** between the casing and the sleeve **62**.

It is thus seen that we have produced an apparatus for steam treating a deep well by which are obtained all of the objects and advantages set forth hereinabove as goals of the present invention.

While only a single preferred embodiment and one modified form of the apparatus of the invention have been disclosed herein, it is to be understood that this is for illustrative purposes only and that various further changes and modifications might be made therein without departing from the spirit of the invention or the scope of the appended claims.

The claims are:

1. An apparatus for steam treating a deep well having a casing, with said well extending into an oil bearing stratum below said casing, said apparatus comprising: a pipe adapted to be extended downwardly through said casing to conduct steam under high temperature and pressure to the portion of said well beneath said casing; and a thermo-responsive packer mounted on a lower portion of said pipe and positioned within a lower portion of said casing when said pipe is so extended downwardly, said packer including an expansible thin walled annular hollow sealed jacket of relatively soft metal surrounding and snugly fitting said steam pipe and closely spaced from said casing, and a body of thermo-responsive material substantially occupying the space within said jacket having a high co-efficient of thermo-expansion, said packer responding to being heated by super-heated steam delivered downwardly through said pipe by expanding into tight sealing engagement with said casing thereby packing off the lower end of the space within said casing surrounding said pipe above said packer.

2. An apparatus as recited in claim **1** wherein there is incorporated with said pipe, as a section thereof, a heavy walled tubular packer mandrel on which said annular jacket is mounted, said jacket snugly fitting said mandrel and being free to extend lengthwise relative to

said mandrel; and means to limit endwise movement of said jacket on said mandrel.

3. An apparatus as recited in claim 2 wherein said jacket comprises inner and outer tubes of aluminum, or other metal of comparable ductility, which are integrally united at their opposite ends to produce an annular hollow space within said jacket said jacket being substantially filled with said thermo-responsive material, said outer tube having annular convolution means formed therein to permit a middle portion at least of said outer tube to expand radially into sealing engagement with said well casing under the pressure produced in said jacket by the heating of said thermo-responsive material.

4. An apparatus as recited in claim 1 wherein said steam pipe is provided with a tubular vacuum insulating sleeve which surrounds said pipe between said packer and the top of the well; and means for drawing a vacuum on the space between said pipe and said sleeve.

References Cited

UNITED STATES PATENTS

1,413,197	4/1922	Swan	166—57
2,942,668	6/1960	Maly et al.	277—26 X
3,053,321	9/1962	Ortloff	277—26 X
3,221,813	12/1965	Closmann et al.	166—40 X
3,272,521	9/1966	McNenny	277—26 X
3,280,909	10/1966	Closmann et al.	166—11

FOREIGN PATENTS

566,125	12/1944	Great Britain.

CHARLES E. O'CONNELL, *Primary Examiner.*

STEPHEN J. NOVOSAD, *Examiner.*

UNITED STATES PATENT OFFICE

CERTIFICATE OF CORRECTION

Patent No. 3,352,359 November 14, 1967

Wayne N. Sutliff et al.

It is hereby certified that error appears in the above numbered patent requiring correction and that the said Letters Patent should read as corrected below.

In the heading to the printed specification, lines 4 to 7, for "Wayne N. Sutliff and Meryl W. Sutliff, Bakersfield, Calif. assignors to St. Louis Janitor Supply Co., doing business as Navy Brand Manufacturing Company, St. Louis, Mo., a corporation of Missouri" read -- Wayne N. Sutliff, 2901 Glenwood Circle, and Meryl W. Sutliff, 2920 Monterey St., Bakersfield, Calif. 93306 --.

Signed and sealed this 26th day of November 1968.

(SEAL)
Attest:

Edward M. Fletcher, Jr.
Attesting Officer

EDWARD J. BRENNER
Commissioner of Patents