Oct. 24, 1967 T. P. STAFFORD 3,348,543

PARENTERAL LIQUID ADMINISTRATION APPARATUS

Filed Oct. 20, 1965

FIG. 1.

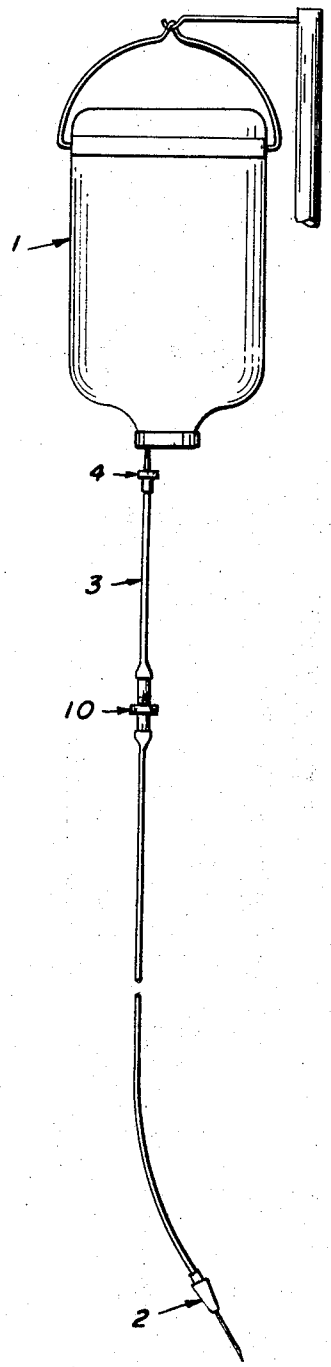

FIG. 2.

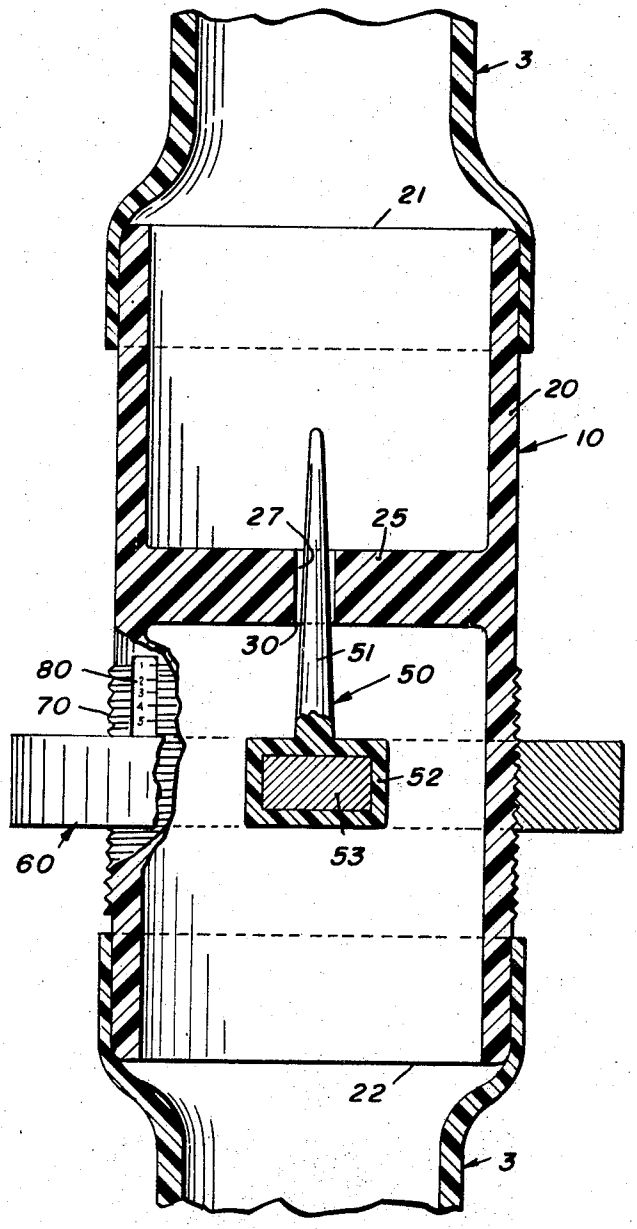

INVENTOR

THOMAS P. STAFFORD

BY

Larry N. Barger

ATTORNEY

United States Patent Office

3,348,543

Patented Oct. 24, 1967

1

3,348,543
PARENTERAL LIQUID ADMINISTRATION APPARATUS

Thomas P. Stafford, Glendale, Calif., assignor to Don Baxter, Inc., Glendale, Calif., a corporation of Nevada

Filed Oct. 20, 1965, Ser. No. 498,535
4 Claims. (Cl. 128—214)

ABSTRACT OF THE DISCLOSURE

In a parenteral administration system an improved magnetically controlled flow meter connected in series with a conduit, parenteral solution body and an administration needle, in which the flow meter has a freely magnetically-suspended tapered spire-like valve member pointed upstream and extending through a transverse aperture formed in a transverse partition and a manually controlled magnet is adjustably mounted on the flow meter in relation to a calibrated gauge whereby dispensing of liquid can be accurately adjusted.

This invention pertains to apparatus for administering parenteral liquids from a container to a patient and more particularly it relates to a magnetically operated control for varying the rate at which liquid flows to the patient.

Parenteral liquids, as for example normal saline or 5% dextrose in water, are supplied to hospitals in containers or bottles. When administered, a long, flexible plastic tube called in "administration set" with a venous needle at one end is connected at an opposite end to the container. In the past, liquid flow rates through this "administration set" were controlled by pinching or crimping the flexible tube with a clamp mounted externally of the tube. Many types of clamps were used as, for instance, screw clamps, metal bend clamps, roller clamps, etc.

The main weakness with all of these clamps that pinch the tube was that often they did not hold a particular set flow rate. When a flexible plastic tube is crimped, it tends to cold flow and thus become more flattened or pinched. With one of the above clamps set at a particular setting, it was not uncommon for the flow rate through the administration set to steadily decrease until the rate was as little as fifty or sixty percent of the original setting. This gradual shutting down of liquid flow because of the cold flow and the plastic tubing required considerable attention and resetting by a nurse to maintain a desired liquid flow rate to a patient.

It is an object of this invention to provide a parenteral liquid flow control device which will hold a constant flow rate.

Another object of this invention is to provide a magnetically operated parenteral liquid control device that will keep a constant liquid flow rate through a parenteral liquid administration apparatus.

Still another object of this invention is to provide a variable flow parenteral liquid administration apparatus with a magnetically controlled flow regulator that gives a direct reading of liquid flow rate through the parenteral liquid administration apparatus.

Other objects of this invention will become apparent upon further description with reference to the following drawings, in which:

FIGURE 1 is a front elevational view of the variable flow parenteral liquid administration apparatus connected to a parenteral liquid container; and

FIGURE 2 is an enlarged sectional view of the magnetically operated flow regulator in a flexible tube line of the parenteral liquid administration apparatus.

One specific embodiment of my invention is shown in the attached drawings. In FIGURE 1, the parenteral

2

liquid administration apparatus or "administration set" comprises a flexible tube **3** with a hollow piercing spike **4** attached at an upper end thereof which is shown connected to a parenteral liquid container **1**. In use, liquid flows in a continuous channel from parenteral liquid container **1** through flexible tube **3** and through hollow venous needle **2** which is inserted in a patient's vein. Disposed in the flexible tube **3** intermediate its upper and lower ends is a magnetically actuated flow regulator **10** which controls how fast liquid is administered to the patient.

This flow regulator is shown more clearly in the enlarged sectional view of FIGURE 2. Flow regulator **10** has a rigid tubular body **20** with a passage therethrough from an upstream end **21** to a downstream end **22**. This passage connects with the liquid channel through flexible tube **3**. Thus, before liquid from parenteral liquid container **1** can reach venous needle **2**, it must pass through the passage in rigid tubular body **20**.

Inside rigid tubular body **20** is a valving arrangement including a flange **25** integral with a wall of the tubular body and extending inwardly to a valve seat **30** which surrounds orifice **27**. A movable valve member labeled generally as **50** has an elongated tapered portion **51** extending into orifice **27** and preferably projecting through it and also has an enlarged portion **52** connected to elongated tapered portion **51**. In FIGURE 2, the elongated tapered portion **51** is shown with a round cross-section but it could be of a different shape that has a cross-section progressively increasing along its length. As the entire movable valve member **50** moves longitudinally relative to the rigid tubular body **20**, the elongated tapered portion **51** varies the amount of liquid flowing through orifice **27**. To completely shut off liquid flow through rigid tubular body **20**, movable valve member **50** is moved upwardly until elongated portion **51** seats against the valve seat **30**.

A collar **60** and enlarged portion **52** of movable valve member **50** are magnetically coupled so longitudinal movement of collar **60** relative to the rigid tubular body **20** likewise moves valve member **50** relative to tubular body **20**. The precise flow rate in cubic centimeters per hour or per minute can be read directly from calibrations **80** on rigid tubular body **20**. Collar **60** is supported by thread **70** on the exterior of rigid tubular body **20** and longitudinal movement relative thereto is accomplished by rotating the collar **60** about rigid tubular body **20**. Collar **60** and enlarged portion **52** can be entirely of a magnetic material such as illustrated by collar **60** in FIGURE 2, or they can have magnetic metal encased in a nonmagnetic substance as ceramic or thermoplastic, such as illustrated by enlarged portion **52** in FIGURE 2.

In this specification and the attached claims, the term "magnetic" is used to denote a material or substance which can be attracted or repelled by magnetic force. In "magnetically coupling" collar **60** and movable valve member **50** together, either one or both could contain a permanent magnet.

As shown in FIGURE 2, the elongated tapered portion **51** of movable valve member **50** tapers radially inwardly in the direction of the upstream end **21** of rigid tubular body **20**. I have found this to be the preferable orientation with liquid flowing through orifice **27** trying to push the elongated tapered portion out of orifice **27**. This pushing force is counteracted by magnetic section **53** and collar **60**. With movable valve member **50** inverted so the elongated tapered portion **51** tapers radially inwardly toward the downstream end **22** of rigid tubular body **20**, I have found that occasionally liquid flowing past elongated tapered portion **51** will suck it down into orifice **27**, wedging it against valve seat **30**. This can happen when the flow regulator is set at very slow flow rates.

The flow meter of this invention holds an amazingly

steady flow rate. As mentioned previously, some of the prior flexible tube pinching clamps allowed the flow rate to vary as much as fifty percent because of the cold flow in the plastic tubing. For example, when 5% dextrose solution in distilled water was fed to my flow regulator which had been set at eighty-three drops per minute, the following were the results of a sixty-minute run:

Time:	Rate of drops per minute
Start	83
+5 minutes	82
+30 minutes	81
+60 minutes (end)	81

The calculated efficiency is

$$\frac{81}{83}\times 100=97.8\,\%$$

However, since the loss in head accounts for about two drops per minute, this flow regulator has a near perfect efficiency for holding a flow rate.

In this specification I have used a specific embodiment of my invention to illustrate the invention. It is, however, understood that persons skilled in the art can make certain modifications to this embodiment without departing from the spirit and scope of this invention.

I claim:

1. A variable flow liquid administration system comprising in combination a container, conduit means, and venous needle means all connected in series, said container including a liquid to be administered, and flow-regulating means interposed in said conduit means and connected in series therewith, said regulating means comprising:

an elongated tubular body having an upper inlet and a lower outlet respectively connected in series to said conduit means, said body having a single intermediate flange disposed transversely between said inlet and outlet and defining separate chambers, said chamber above said flange containing and being filled with said liquid to be administered, said flange including a longitudinally extending orifice having a substantially uniform cross section, said flange including a lower seat surrounding said orifice; a magnetically attractive, manually-controllable element circumposed on said tubular body and adjustably secured thereto, said manually-controllable element having a longitudinal range of adjustment greater than the longitudinal length of said orifice; and a valve member including an enlarged, lower magnetically attractive enlarged portion magnetically coupled to said manually-controllable element and freely suspended in said body beneath said flange so that there is substantially no frictional resistance to movement thereof, said valve member including an elongated, integral and upwardly tapered stem tapered from said enlarged portion and extending through said orifice and therebeyond whereby fine incremental adjustments of said liquid are provided over a wide range and at a substantially constant rate; the liquid in said upper chamber flowing around said tapered stem and preventing drag on said stem and tending to prevent impaction of said stem in said orifice and providing a liquid flowing cushion thereabout whereby the adjustments of said valve member are substantially instantaneous.

2. A variable flow liquid administration system as set forth in claim 1 in which said tubular body includes a plurality of calibrations extending longitudinally therealong and in alignment with an edge of said manually controllable element and providing a direct reading of the flow rate through said system.

3. A variable flow liquid administration system as claimed in claim 1 in which said magnetically attractive manually-controllable element comprises an annular collar threadedly engaged on the outer surface of said body.

4. A variable flow liquid administration system as claimed in claim 1 in which said enlarged lower portion of said valve member comprises a magnetically attractive core encased in a plastic material formed integral with said elongated, upwardly tapered stem.

References Cited

UNITED STATES PATENTS

2,442,599	6/1948	Herrick et al.	251—65
2,533,491	12/1950	McMahon et al.	251—65
2,536,813	1/1951	Jones et al.	251—65
2,700,395	1/1955	Young	251—65
3,204,633	9/1965	Hofstra	222—158 X

FOREIGN PATENTS

1,092,940	11/1960	Germany.
744,858	2/1956	Great Britain.

ROBERT B. REEVES, *Primary Examiner.*

HADD S. LANE, *Examiner.*