SPRING CUSHION EGG FLAT

Filed Dec. 14, 1964 3 Sheets-Sheet 1

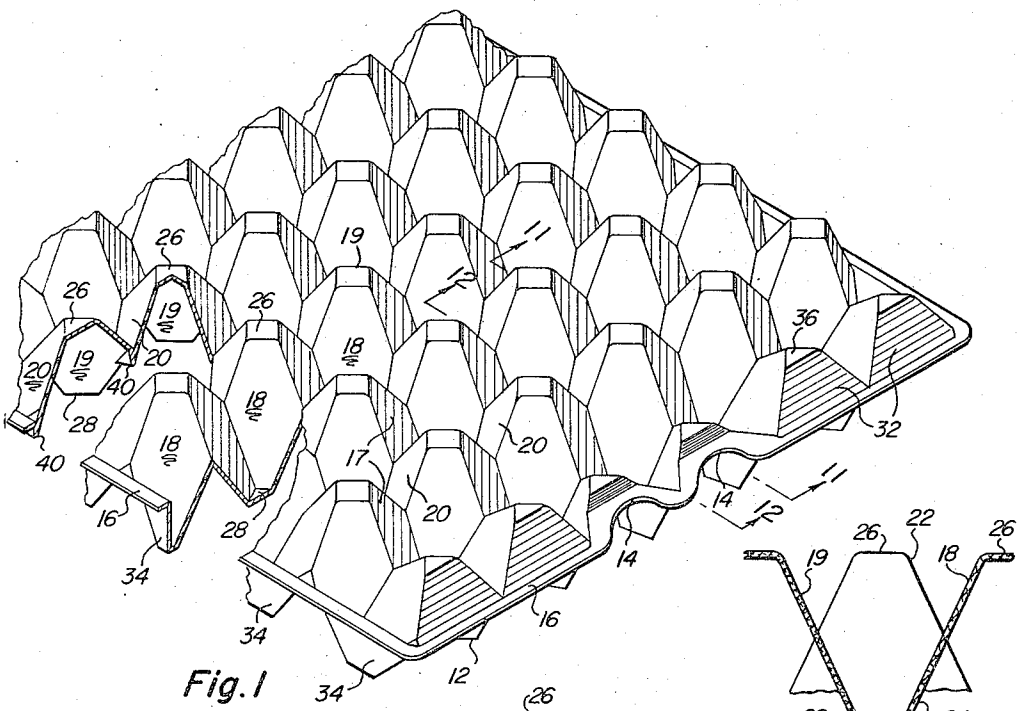

Fig. 1

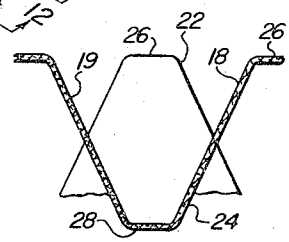

Fig. 9

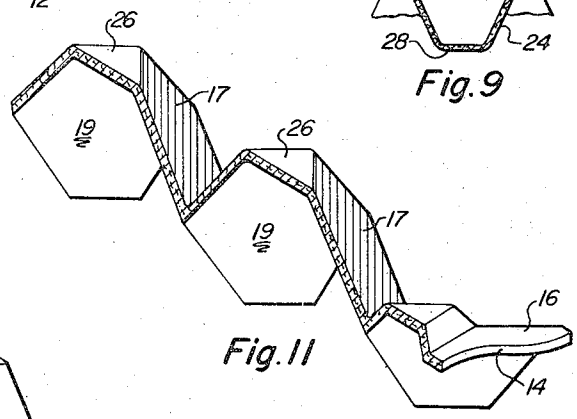

Fig. 11

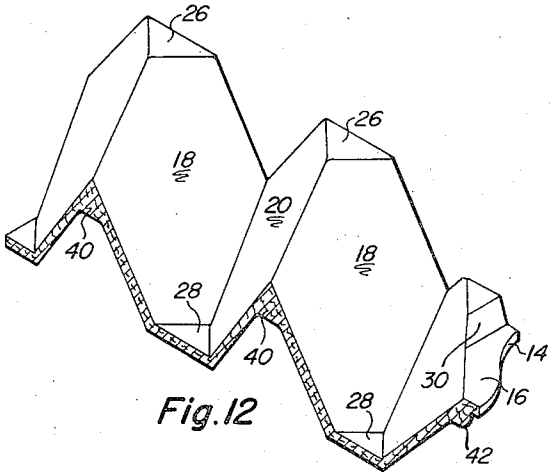

Fig. 12

AMMON M. LEITZEL
INVENTOR

BY
BUCKHORN, BLORE, KLARQUIST & SPARKMAN
ATTORNEYS

SPRING CUSHION EGG FLAT

Filed Dec. 14, 1964 3 Sheets-Sheet 2

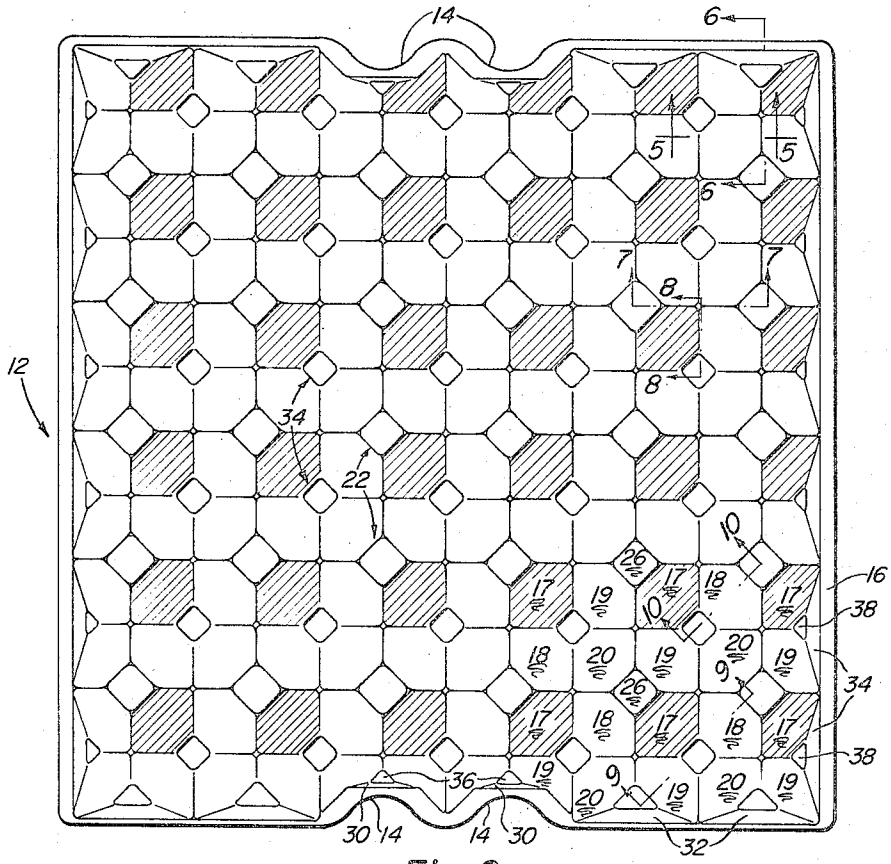

Fig. 2

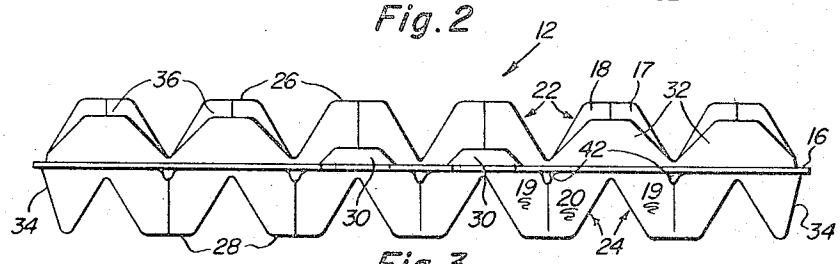

Fig. 3

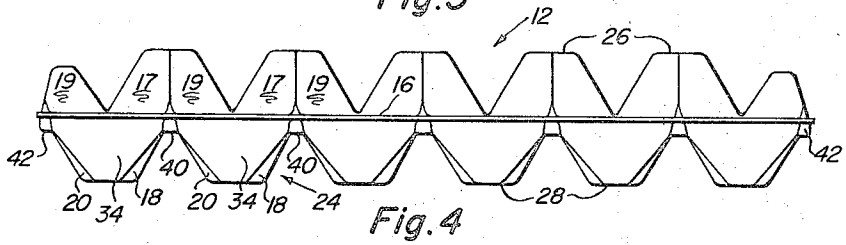

Fig. 4

AMMON M. LEITZEL
INVENTOR

BY
BUCKHORN, BLORE, KLARQUIST & SPARKMAN
ATTORNEYS

SPRING CUSHION EGG FLAT

Filed Dec. 14, 1964 3 Sheets-Sheet 3

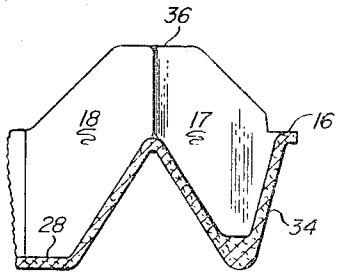

Fig. 5

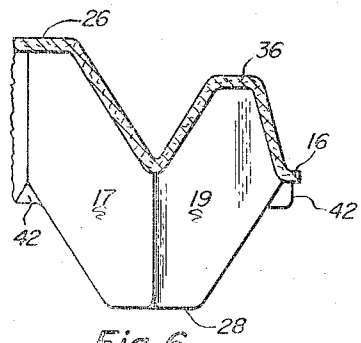

Fig. 6

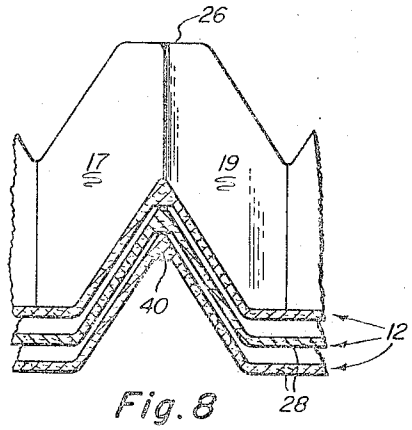

Fig. 8

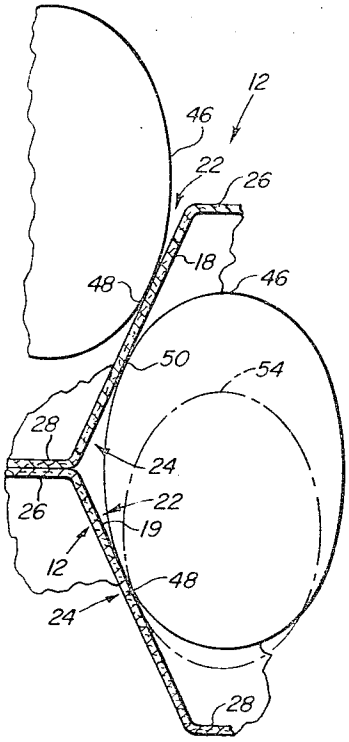

Fig. 10

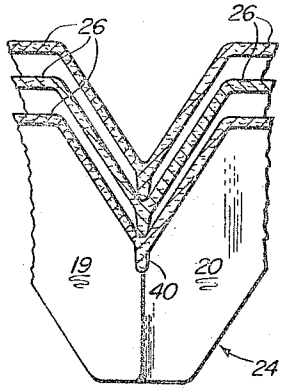

Fig. 7

AMMON M. LEITZEL
INVENTOR

BY
BUCKHORN, BLORE, KLARQUIST & SPARKMAN
ATTORNEYS

United States Patent Office

3,343,702

Patented Sept. 26, 1967

1

3,343,702

SPRING CUSHION EGG FLAT

Ammon M. Leitzel, Portland, Oreg., assignor, by mesne assignments, to Keyes Fibre Company, Waterville, Maine, a corporation of Maine

Filed Dec. 14, 1964, Ser. No. 417,900
7 Claims. (Cl. 217—26.5)

This invention relates to a spring cushion egg flat, and more particularly to a de-nestable spring cushion egg flat.

Egg flats or trays, each of which supports a plurality of eggs, and is adapted to be stacked upon other trays and to have other trays carrying eggs stacked upon it, are, of course, broadly old and well known. It would be desirable in such flats to support each flat directly from the flat therebelow, or the bottom of the crate in the case of the bottom flat, so that loads are not placed on the eggs in the trays immediately therebelow. This has been achieved in the past by providing posts positioned between upwardly facing egg-holding sockets, which engage downwardly projecting posts of the flats thereabove. Such a construction works well with eggs of normal or small sizes, but where large eggs are included either excessive space must be provided or each upper flat engages and rests at least partially on large eggs immediately therebelow with a consequent breakage and loss of such eggs. It would be desirable to provide an egg flat by which each flat is supported directly by the flat immediately therebelow and which, with a minimum of space, gently holds eggs of all sizes, oversize and large as well as normal and small eggs.

An object of the invention is to provide a new and improved spring cushion egg flat.

Another object of the invention is to provide a de-nestable spring cushion egg flat.

A further object of the invention is to provide an egg flat which is supported substantially completely by a similar egg flat or crate bottom immediately therebelow, which engages eggs supported thereby with a spring cushioning effect, and also engages oversize eggs positioned immediately therebelow with a spring cushion effect.

A still further object of the invention is to provide an egg flat which holds eggs without breakage and which is easily de-nested.

Yet another object of the invention is to provide an egg flat which may be stacked with other egg flats prior to insertion of eggs therein, and has finger holds on two opposite sides thereof, with the egg flat being turnable either 90° for positioning uniformly with similar egg flats in a crate, or may be flopped over 180° before loading for positioning on such other trays in a crate with the finger holds or notches in the two sides thereof aligned with the finger holds or notches of similar trays above and below.

The invention provides a spring cushion egg flat having upwardly and downwardly facing sockets which also act as posts for engaging flats immediately above and immediately below each flat. Each socket is made up of four flat, resilient panels, which are of such a slope as to engage eggs with a cushioning contact positioned in the egg flat immediately below at points above those at which eggs supported in the egg flat itself are supported. Preferably the egg flats are provided with bar supports positioned at the junctures of the lower sockets, to permit the egg flats to be easily de-nested from each other when stacked preparatory to loading eggs therein. The egg flats, while in such stacks preparatory to loading eggs therein, are symmetrical above and below so that alternate egg flats may be flopped over 180° prior to loading eggs therein, and each is adapted to have the lower posts thereof engage the upper posts of the egg flat immediately therebelow. Each flat has finger holds positioned in the central portions of two of the sides of each tray, and the above construction permits these holds in a flopped-over egg flat to be aligned with the finger holds of each of the other egg flats.

2

A complete understanding of the invention may be obtained from the following detailed description of an egg flat forming a specific embodiment thereof, when read in conjunction with the appended drawings, in which:

FIG. 1 is a perspective view of an egg flat forming one embodiment of the invention, shown with portions thereof broken away;

FIG. 2 is a top plan view of the egg flat of FIG. 1;

FIG. 3 is a side elevation of the egg flat of FIG. 1;

FIG. 4 is a front elevation of the egg flat of FIG. 1, with portions thereof broken away;

FIG. 5 is a fragmentary, vertical section taken along line 5—5 of FIG. 2;

FIG. 6 is a fragmentary, vertical section taken along line 6—6 of FIG. 2;

FIGS. 7 and 8 are fragmentary, vertical sections taken respectively along line 7—7 and 8—8 of FIG. 2 and showing a plurality of identical egg flats stacked together preparatory to loading eggs in the uppermost tray;

FIG. 9 is a fragmentary, vertical section taken along line 9—9 of FIG. 2;

FIG. 10 is an enlarged, vertical section of two stacked flats, identical to the flat of FIG. 1; and

FIGS. 11 and 12 are fragmentary vertical sections taken respectively along lines 11—11 and 12—12 of FIG. 1.

Referring now in detail to the drawings, there is shown therein an egg flat or tray **12** (FIGS. 1 and 2) which is of identical construction on the top and bottom thereof so that it can be flopped 180° and still maintain its finger notches or gripping holds **14** aligned with the notches of other, identical flats stacked therewith. The flat is preferably of integral molded pulp construction and includes a median, planar edge member **16** and panels **17, 18, 19** and **20**, which are slightly flexible. The panels **17, 18, 19** and **20** are hexagonal in shape and are identical except for those portions thereof immediately bordering the edge member **16**. Each group of the panels **17** to **20** forms four-sided pyramidal hollow posts or sockets **22** and **24**. That is, the upwardly directed posts **22** are also downwardly directed sockets, and the posts **24** are downwardly directed and also define upwardly directed sockets. Integral with the upper edges of the posts **22** are flat, horizontal tops **26**, and integral with the lower edges of the panels **17, 18, 19** and **20** are flat, horizontal bottoms **28**. The tops **26** lie in a single plane and are joined directly to the top edges of the panels, and the bottoms **28** lie in a single plane and are joined directly to the bottom edges of the panels **17** to **20**. Near the edge member **16**, panels **30, 32** and **34** joint the member **16** to the panels **17, 18, 19** and **20**, with generally triangular tops **36** and bottoms **38** lying in the same plane as the tops **22** and bottoms **24**, respectively, joining these exterior ones of the panels **17, 18, 19** and **20** and the panels **30, 32** and **34**.

Bar supports **40** are molded integrally with the tray as are outer bar supports **42** which are located at the extreme edges of the flat (FIG. 4). The bar supports are generally triangular webs joining the line-like portions of the angularly intersecting edges of the panels which are adjacent the apices or junctures of these line-like portions. The bar supports **40** and **42** are adapted to support the flats in nested positions, as illustrated in FIGS. 7 and 8, and space the flats vertically from each other so that they may be readily separated, and prevent formation of vacuum and friction between adjacent flats when the flats are in nested positions for compact storage and handling.

The flats, when stacked upon each other, serve to support eggs **46** and **54** in the upwardly opening ones of the sockets **22** and **24**. The slope and spacings of the panels **17**, **18**, **19** and **20** (FIG. 10) are identical and are such as to support large and oversized eggs **46** in positions in which points of contact **48** of the eggs with the walls **17** to **20** are located above points of contact **50** of the panels **17** to **20** with oversized eggs **46** positioned therebelow. The slope of the panels **17** to **20** and the spacing of these panels from each other preferably are such that even the bottoms of small or undersized eggs **54** will engage the panels **17** to **20** at points above the engagement of the other sides of these panels by oversized eggs. When two oversized eggs **46** are placed in adjacent sockets of adjacent flats, which is the extreme condition for danger of breakage, the points of contact of the upper egg on the separating panel is always above the point of contact on the underside of that panel by the lower oversized eggs, as is illustrated in FIG. 10. The panels **17**, **18**, **19** and **20** are preferably of flexible molded pulp construction, and form spring cushion supports for the eggs and the flexibility is substantially the same on each side of each panel so that the flats can be turned upside down and provide the same degree of cushioning as when the trays are right side up. These spring cushion supports give slightly at the points **48** and **50** of engagement with the eggs, and provide a cushioned support for each egg. The flats are relatively rigid for carrying purposes, while being provided with the flexible cushioning panels **17** to **20**. The tops **26** and bottoms **28** are flat and large, and are positioned to engage one another.

The slope and length of the walls **17** to **20** are such that even with oversized eggs **46**, the tops **26** of one flat engage the bottoms **28**, or tops **26** if the latter flat is inverted so that the posts of each lower flat bear substantially all of the weight of the flats thereabove and the eggs contained therein, even with oversized eggs in the lower flats. Thus, the eggs are protected against excessive loads thereon, which protection is augmented by the cushioning effect of the panels **17** to **19** in their engagement with the eggs, both at the points **48** and at the points **50**. The four-sided, truncated, pyramidal structure of the posts **22** and **24** also assures excellent ventilation throughout all of the trays.

It is to be understood that the above-described arrangements are simply illustrative of the application of the principles of the invention. Numerous other arrangements may be readily devised by those skilled in the art which will embody the principles of the invention and fall within the spirit and scope thereof.

What is claimed is:

1. In combination,

a plurality of like egg flats adapted to be placed one on top of the other with each upper egg flat being supported directly by the egg flat immediately therebelow,

each egg flat being provided with upwardly facing sockets for receiving eggs,

the upwardly facing sockets having substantially horizontal bottoms and planar walls defining with the bottoms downwardly directed posts for supporting the egg flat and eggs therein,

each egg flat also being provided with downwardly facing sockets having substantially horizontal tops for fitting over eggs nested in the upwardly facing sockets of the egg flat immediately therebelow,

the downwardly facing sockets having tops adapted to engage the bottoms of the upwardly facing sockets of the egg flat immediately thereabove and having planar walls defining with the tops upwardly directed posts adapted to be engaged by and support the downwardly directed posts of the egg flat immediately thereabove,

the walls of the downwardly directed sockets forming continuations of and lying in the same planes as the walls of the upwardly directed sockets and all of the walls of each of the sockets extending from the top of the downwardly directed socket to the bottom of the upwardly directed socket and being resilient and of a spacing and slope sufficient to space all points of contact between eggs in the upwardly directed sockets of each egg flat above all the points of contact with the walls of the downwardly directed sockets thereof of eggs in the egg flat immediately therebelow.

2. In combination,

a plurality of like egg flats adapted to be placed one on top of the other with each upper egg flat being supported directly by the egg flat immediately therebelow,

each egg flat being provided with upwardly facing sockets of four-sided, truncated pyramidal shape for receiving eggs and defining downwardly directed posts for supporting itself and eggs therein,

each wall of each upwardly facing socket extending to the bottom of that socket,

each egg flat also being provided with downwardly facing sockets of four-sided, truncated pyramidal shape for fitting over eggs nested in the upwardly facing sockets of the egg flat immediately therebelow and defining posts adapted to be engaged by and support the downwardly directed posts of the egg flat immediately thereabove,

each wall of each downwardly facing socket extending to the top of that socket,

each wall of each downwardly directed socket forming a continuation of and lying in the same plane as one of the walls of the upwardly directed sockets and being resilient and of a spacing and slope sufficient to space all points of contact between eggs in upwardly directed sockets of each egg flat above all the points of contact with the walls of the downwardly directed sockets thereof of eggs in the egg flat immediately thereblow.

3. In an egg flat adapted to nest with other like egg flats and to be stacked in a crate to hold eggs therein,

a plurality of elongated, generally hexagonal, planar panels,

the panels being arranged in groups of four panels forming downwardly opening sockets with the upper side edges of the panels joined to one another and defining truncated upper pyramids,

the lower side edges of the panels of each group being joined to the lower side edges of the panels of surrounding groups of the panels forming upwardly opening sockets adapted to receive and support eggs and defining truncated lower pyramids,

a plurality of substantially flat tops on the upper ends of the downwardly facing sockets and joined directly to the top edges of the panels and forming first posts therewith,

a plurality of substantially flat bottoms on the lower ends of the upwardly facing sockets and joined directly to the top edges of the panels and forming second posts therewith adapted to engage the first posts of an identical tray therebelow,

the panels having a predetermined spacing and a predetermined slope sufficient to space points of contact therewith of eggs in the upwardly facing sockets above points of contact therewith of eggs engaged by the lower faces of the downwardly facing sockets,

the posts being of sufficient length that the first posts support substantially the entire weight of the tray both when the egg flat is placed on a flat surface and when the egg flat is placed on a similar tray therebelow.

4. In an egg flat adapted to nest in other like egg flats and to be stacked in a crate to hold eggs therein,

a plurality of elongated, generally hexagonal, planar panels,

the panels being arranged in groups of four panels forming downwardly opening sockets with the upper side edges of the panels joined to one another and defining truncated upper pyramids,

the lower side edges of the panels of each group being joined to the lower side edges of the panels of surrounding groups of the panels forming upwardly opening sockets adapted to receive and support eggs and defining truncated lower pyramids,

a plurality of substantially flat, horizontal tops on the upper ends of the downwardly facing sockets and joined directly to the top edges of the panels and forming first posts therewith,

a plurality of substantially flat, horizontal bottoms on the lower ends of the upwardly facing sockets and joined directly to the bottom edges of the panels and forming second posts therewith adapted to engage the first posts of an identical tray therebelow,

the panels having a predetermined spacing and a predetermined slope sufficient to space points of contact therewith of eggs in the upwardly facing sockets above points of contact therewith of eggs engaged by the lower faces of the downwardly facing sockets,

the posts being of sufficient length that the first posts support substantially the entire weight of the tray both when the egg flat is placed on a flat surface and when the egg flat is placed on a similar tray therebelow.

5. In an egg flat adapted to nest in other like egg flats and to be stacked in a crate with eggs held therein,

a plurality of four-sided, truncated pyramidal, downwardly opening, upper sockets arranged in parallel rows and having tops,

a plurality of four-sided, truncated pyramidal, upwardly opening, lower sockets arranged in parallel rows alternating with the rows of the upper sockets,

the lower sockets being staggered with respect to the upper sockets and having flat bottoms,

the sidewalls of the upper sockets forming continuations of and lying in the same planes as the sidewalls of the lower sockets,

the sockets being of such lengths that the tops engage the bottoms of a similar egg flat positioned thereabove and support the last-mentioned egg flat,

the sidewalls of the sockets being planar throughout their lengths and extending from the flat tops of the upper sockets to the flat bottoms of the lower sockets and the sidewalls of the sockets also having spacing and slopes sufficient to engage eggs in the upwardly opening lower sockets at points on the sidewalls spaced above points on the sidewalls engaging eggs therebelow.

6. The egg flat of claim 5 wherein the edges thereof at two opposite sides thereof have finger-receiving notches,

the sockets of the egg flat being arranged identically on top and bottom so that the egg flat may be flopped over and engage an identical egg flat positioned immediately therebelow.

7. In combination,

a plurality of like egg flats adapted to be placed with eggs therein one on top of the other with each upper egg flat being supported directly by the egg flat immediately therebelow and also being adapted to nest one within the other prior to loading eggs therein,

each egg flat being provided with upwardly facing sockets for receiving eggs and having bottoms and defining downwardly directed posts for supporting the egg flat and eggs therein,

each egg flat also being provided with downwardly facing sockets for fitting over eggs nested in the upwardly facing sockets of the egg flat immediately therebelow and having tops and defining posts adapted to be engaged by and support the downwardly directed posts of the egg flat immediately thereabove,

the walls of the downwardly directed sockets forming continuations of the walls of the upwardly directed sockets and all of the walls extending substantially completely to each of the upper and lower extremities of the sockets and being planar resilient and of a spacing and a slope sufficient to space all points of contact between eggs in upwardly directed sockets of each egg flat above all the points of contact with the walls of the downwardly directed sockets thereof of eggs in the egg flat immediately therebelow,

and a plurality of generally triangular bar supports joining the lower portions of and extending between the downwardly directed posts to limit the extent of nesting.

References Cited

UNITED STATES PATENTS

1,205,872	11/1916	Eaid	217—26.5
2,078,927	5/1937	Dorr	217—26.5
2,233,044	2/1941	Beck	217—26.5
2,662,659	12/1953	Putnam	217—26.5
2,691,456	10/1954	Shepard	217—26.5
2,813,652	11/1957	Parsons	217—26.5
2,844,268	7/1958	Lambert	217—26.5
2,885,136	5/1959	Grant	217—26.5
2,997,196	8/1961	Emery	217—26.5
3,056,523	10/1962	Reifers	217—27
3,120,901	2/1964	Bovd	217—26.5

THERON E. CONDON, *Primary Examiner.*

RAPHAEL H. SCHWARTZ, *Examiner.*

UNITED STATES PATENT OFFICE

CERTIFICATE OF CORRECTION

Patent No. 3,343,702 September 26, 1967

Ammon M. Leitzel

It is hereby certified that error appears in the above numbered patent requiring correction and that the said Letters Patent should read as corrected below.

Column 2, line 56, for "joint" read -- join --; column 4, line 60, for "top" read -- bottom --; column 5, line 50, for "spacing" read -- spacings --.

Signed and sealed this 22nd day of October 1968.

(SEAL)
Attest:

Edward M. Fletcher, Jr.
Attesting Officer

EDWARD J. BRENNER
Commissioner of Patents