Aug. 22, 1967 J. M. PISTEY 3,337,837

ELECTRIC CONNECTOR WITH TORSION CONTACTS

Filed April 6, 1964 2 Sheets-Sheet 1

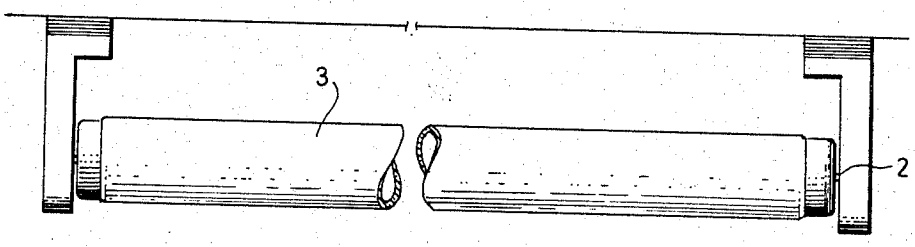

FIG. 1

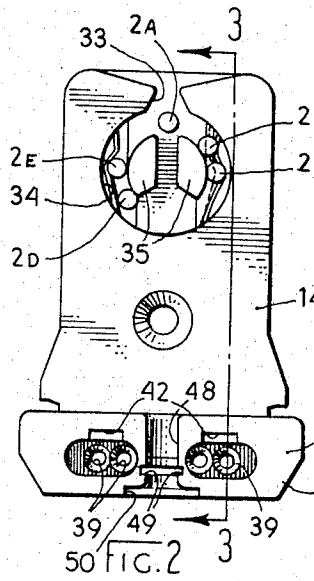

FIG. 2

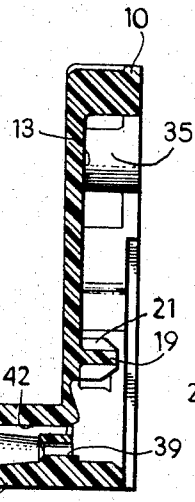

FIG. 3

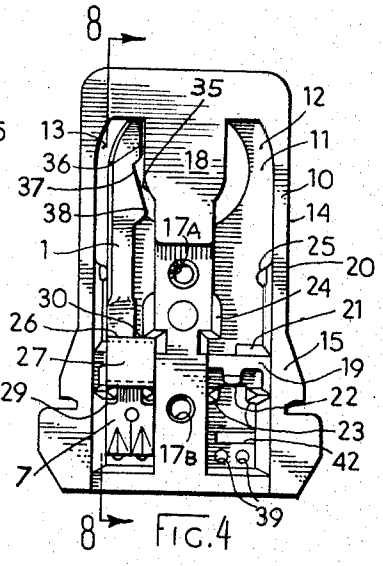

FIG. 4

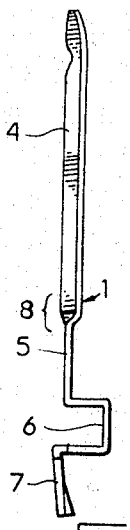

FIG. 5

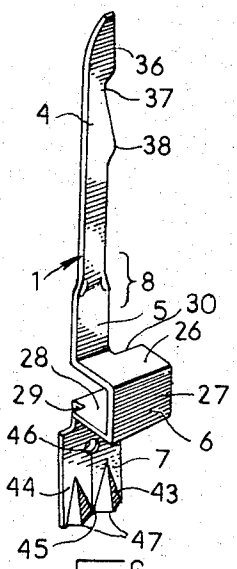

FIG. 6

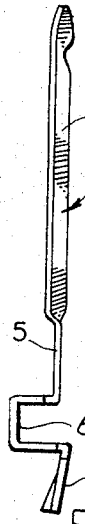

FIG. 7

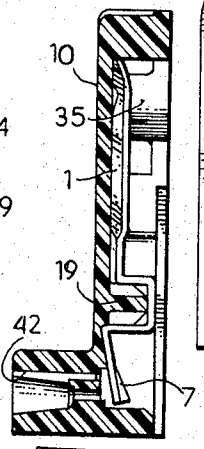

FIG. 8

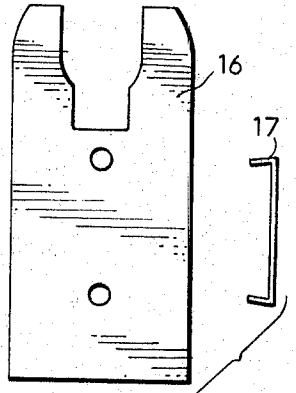

FIG. 9

INVENTOR.
John M. Pistey,
BY
Edward J. Hanson,
Attorney.

Aug. 22, 1967 J. M. PISTEY 3,337,837

ELECTRIC CONNECTOR WITH TORSION CONTACTS

Filed April 6, 1964 2 Sheets-Sheet 2

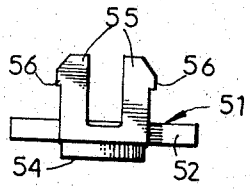

FIG. 10

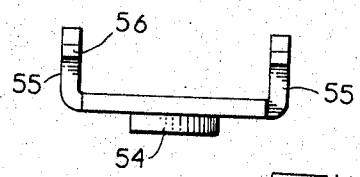

FIG. 11

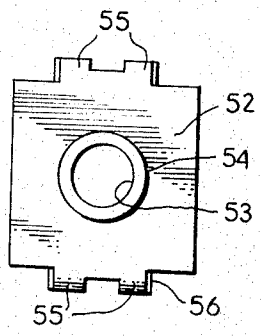

FIG. 12

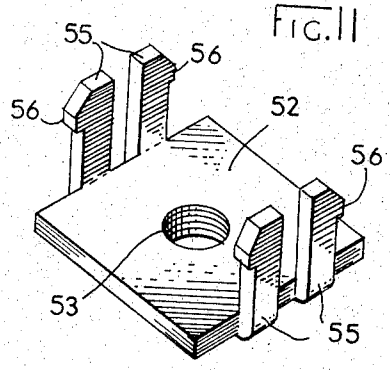

FIG. 13

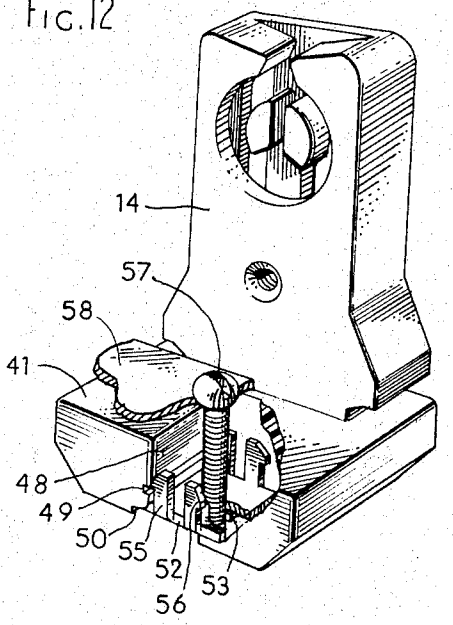

FIG. 14

INVENTOR.
John M. Pistey,
BY
Edward J. Hanson Jr.
Attorney.

United States Patent Office

3,337,837

Patented Aug. 22, 1967

1

3,337,837
ELECTRIC CONNECTOR WITH TORSION CONTACTS

John M. Pistey, Fairfield, Conn., assignor to General Electric Company, a corporation of New York

Filed Apr. 6, 1964, Ser. No. 357,578
9 Claims. (Cl. 339—53)

The present invention relates to electric connectors and the contact means used therein and more particularly to electric sockets having torsion type electric contacts.

My invention finds particular utility in lampholders for use with fluorescent lamps. In the past the lampholder contacts which engaged the lamp pins of the fluorescent lamps have been of predominantly two types. One type is the resiliently biased contact arm or leaf spring having angular movement. This movement might also be characterized as a hinged or flexing movement. This type of contact is exemplified by my Patent 3,060,400 which I have assigned to the same assignee as the present invention. The other type of fluorescent lampholder contact is the one employing a plunger or straight line biased contact. This type of contact generally has a coil spring which biases the contact directly against the lamp pin. My Patent 2,716,738 is an example of this type of contact. The De-Reamer Patent 2,584,677 which is also assigned to the same assignee shows some additional variations of both types of the prior art lampholder contacts discussed above.

It is a principal object of my invention to provide a new and improved contact which is highly efficient in operation and which is particularly suited for use in fluorescent lampholders.

It is another object of my invention to provide such a contact which is simple and economical to manufacture and provides a high degree of dependability.

A further object of my invention is to provide such a contact operating through torsional action, as well as an improved lampholder incorporating such a contact.

Another object of my invention is to provide an improved lampholder including contacts having both a torsional portion for engaging the lamp pins and a pressure locking portion for holding lead-in conductors.

Briefly stated, in carrying out one aspect of my invention, in one form thereof, I have provided an electric socket, such as a fluorescent lampholder, having a torsion contact. This torsion contact has a mounting section which is secured to the socket housing and which is held securely in a stationary position. A contact-making section of the torsion contact is positioned at an angle to the direction of engagement by a mating contact, such as a lamp pin, inserted into the socket. The contact is constructed and mounted to resist angular movement, and a torsion section is provided between the contact-making section and the mounting section. This torsion section is relatively subject to torsional movement, and when a mating contact is pressed against the torsion contact, its response is characterized by a twisting action in addition to some angular movement. The contact twists in the direction in which it is angled away from the engagement, and thus a controlled torsional action occurs when my torsion contact is pressingly engaged by a mating contact.

By a further aspect of my invention I have formed a thin elongated contact blade into a particularly desirable torsion contact. A first blade portion is formed in one plane and a second contact-making portion of the blade is offset in a second plane. These two portions of the blade have one linear axis in common. The blade is mounted so that the edge of the second portion is engaged by a lamp pin when the lamp is inserted in the socket. The first blade portion is thick in the direction in which the force is applied from the lamp pin and resists angular bending in that direction. On the other hand the first section is relatively thin in the other direction and is subject to twisting as the lamp pin engages and moves the offset contact section of the blade. The blade is of sufficient strength to resist sharp bending and by providing a predetermined offset the desired direction and moment of the torsional movement can be regulated in advance with respect to each torsion blade so as to produce a firm contacting pressure with the lamp pin.

2

By a further aspect of my invention I have provided a contact having a contact-making section with torsional movement and a separate pressure locking section for attaching lead-in wires. In one form thereof, the contact has a mounting section between the contact section and the pressure locking section. The mounting section separates the other two sections and when secured in position it segregates the action of the two sections. Thus, my contact embodies two separate and distinct types of action, with the engagement of the lamp pins not affecting the attachment of the lead-in wires and vice versa.

By another aspect of my invention I have provided an improved lampholder including a socket housing for operably mounting my torsional contact in a desirable manner. The housing has a recessed or hollow compartment for each contact with a transverse seating rib across each hollow compartment. For cooperation with this housing the mounting section of the contact is formed into a U-shaped yoke section. The contact-making section with torsional action extends from one side of the yoke section and the pressure locking section extends from the other side of yoke section. The yoke section of the contact is mounted over the transverse rib which engages against the inside of the yoke. Trapping ribs are engaged against the outside of the two legs of the yoke to secure the yoke legs in fixed planes. This segregates the action of each of the contact-making sections which extend from the opposite sides of the yoke section as mentioned above. A wall portion fits over the outside of the bight section of the yoke to trap the contact on the transverse rib.

By a still further aspect of my invention, I have provided a new and improved mounting nut for securing a lampholder in a lighting fixture and I have constructed my lampholder for cooperating engagement with the mounting nut. In this regard the lampholder housing has a projecting foot section with a slot passing through it. Two transverse grooves are formed in the side walls of the slot and a recessed seat is formed at the bottom of the slot. The nut has a planar section which is seated in the recess and extends across the slot. Upstanding legs formed on the base section extend into the slot and have teeth resiliently engaged within the grooves to prevent the nut from being dislodged from the seat. A threaded aperture is formed in the base section of the nut and aligned with the slot so that a bolt may be passed through the slot and threaded into the nut to secure the lampholder in a lighting fixture.

The subject matter which I regard as my invention is particularly pointed out and distinctly claimed in the concluding portion of this specification. My invention, however, both as to organization and method of operation, together with further objects and advantages thereof, may be best understood by reference to the following description taken in conjunction with the accompanying drawings in which:

FIG. 1 is a side elevational view showing the general arrangement of a fluorescent lamp supported between a pair of lampholders embodying my invention;

FIG. 2 is a front elevational view of one of the lampholders of FIG. 1;

FIG. 3 is a sectional view taken along line 3—3 of FIG. 2;

FIG. 4 is a rear view of the lampholder with the back cover and the right hand contact removed;

FIG. 5 is an edge view of the left hand contact of FIG. 4 illustrating the degree of twist in the blade;

FIG. 6 is a perspective view of the contact blade of FIG. 5;

FIG. 7 is an edge view of the right hand contact;

FIG. 8 is a sectional view taken along line 8—8 of FIG. 4;

FIG. 9 is a rear view of the back cover of the lampholder together with the fastening clip;

FIG. 10 is a front elevational view of my lampholder mounting nut;

FIG. 11 is a side elevational view of the mounting nut of FIG. 10;

FIG. 12 is a bottom plan view of the nut member of FIG. 10;

FIG. 13 is an isometric view of the nut of FIG. 10; and

FIG. 14 is an isometric view partly in section of the lampholder of FIG. 1 showing the mounting nut of FIG. 10 engaged therewith.

Referring now to FIGS. 5 and 6 of the drawings, I have shown therein a contact or contact connector **1** embodying the torsion contact aspect of my invention in one form thereof. The torsion contact shown in FIGS. 5 and 6 is constructed for use in electric sockets for engagement with the pins **2** of a bi-pin fluorescent lamp such as the lamp **3** shown in FIG. 1. The torsion contact **1** is of a thin blade construction and has a somewhat twisted contact making section **4**, portions of the plane of which are offset in relation to portions of the plane of an intermediate elongated section **5**. The contact **1** also includes a U-shaped yoke section **6** which is the mounting section of the contact and an angularly moving pressure locking type contact section **7**. The torsional section of the blade **1** includes part of the offset contact-making section **4** and the intermediate section **5**. While these two sections are offset along their longitudinal edges it may be seen that they are in alignment at one point intermediate their edges and therefore they have one common longitudinal axis. The forces from the lamp pins, as will be more fully explained hereinafter, produce a torsional effect in the blade and this effect is distributed from the point of actual contact down through the two sections, **4** and **5**. Thus sections **4** and **5** together form a unified torsion action section or torsional contact-making section **8** and the actual contact-making section of the blade is that portion of the larger contact-making section that is actually engaged by a lamp pin. FIG. 7 shows the right hand contact blade **9**. Contact blade **9** is a mirror image of blade **1** and the parts have been numbered the same. It will be understood that the operation and construction of the blades is the same, the reason for the reversal of arrangement being that one is the left hand contact blade of a pair and the other the right hand contact blade.

The plane of the contact making section **4** can be seen in FIG. 5 to be offset from the plane of the intermediate section **5**. The number of degrees by which the contact-making section **4** is offset from the plane of the intermediate section **5** depends upon a number of variable factors, including the material used in constructing the blade, the thickness and the width of the blade, the amount of resistance to torsional twist desired and the size of the mating contact, etc. Of further significance would be the degree of firmness of the engagement desired between the two mating contacts. In one application I have formed my contact blades of Phosphor bronze with the angle of the offset in this particular application being 8°.

I have found it very desirable for optimal results in most bi-pin lampholder applications to hold the range of the offset between the two sections **4** and **5** of the unified torsional contact-making section between 4° and 20°. I have found that with an offset of less than 4° there is a marked tendency for the torsional contact making section of the blade to have a distorted uncontrolled twist varying greatly from contact blade to contact blade in a single production of blades and even varying in an individual blade from engagement to engagement by the lamp pins during continued use. A blade may even twist in one direction one time and in the other direction the next time it is engaged. This greatly reduces the reliability and serviceability of the contact during use.

As the angle of the offset is increased the resistance to torsional movement decreases. This is because the lamp pin force is being applied more directly into direct twisting of the contact. I have found that when the offset is increased above 20°, my blades **1** and **9**, which are formed for use in bi-pin lampholders, have proved less satisfactory in operation. Furthermore, there is a marked tendency for the blades to tear during manufacture if the offset is increased beyond 20°.

It can be readily appreciated that in certain applications torsional action is particularly desirable. For example torsional contact action can give a rigid and firm engagement against an inserted mating contact accompanied by a very desirable wiping action. With the particular arrangement shown in the drawings this wiping action occurs as the torsion contact blade is cammed around and then allowed to partially return as the lamp pin is fully positioned in mating engagement with it. In other words, the torsion contact is twisted to a greater extent during an initial stage of the insertion of a lamp pin into a lampholder than it is in its final engaged position which means the contact is twisted in one direction and then due to the torsional return action moves back along the lamp pin as some of the torsional forces are reduced. This means that the lamp pin gets more than a straight line wipe as it passes along the edge of the blade into a seated position. It has been observed that the torsional section of the contact blade does not have a perfectly pure torsion action for when the blade twists around there is usually some amount of angular bending, but the characteristic feature of the torsional section's operation is a twisting or torsion action.

Turning now to a detailed description of the means for securing the contact blades **1** and **9** in the lampholder socket housing **10**, attention is directed to FIG. 4. The housing **10** is recessed, recess **11** being divided into two hollow compartments **12** and **13**. The hollow chambers or recesses **12** and **13** are mirror images of each other. The housing **10**, as may be seen in FIGS. 2–4 and 9, has a front wall **14** and a rear wall **15**. The rear wall **15** includes a removable cover member **16**, which is secured in position by the clip **17**, the two legs of which engage in the slots **17*a*** and **17*b***.

Looking again in particular at FIG. 4, the longitudinal rib **18** can be seen to divide the recess **11** into the two hollow chambers or recesses **12** and **13**. This longitudinal rib **18** is formed integrally with the front wall **14**. Now looking in particular at the hollow chamber **12**, a transverse rib **19** can be seen to extend across the hollow chamber **12** between the longitudinal rib **18** and the side wall **20** of the housing. This transverse rib **19** has an upper step **21** on its upper surface extending inwardly from the side wall **20**. A lower step **22** is formed on the lower surface of the transverse rib **19**. The lower step **22** is centrally located and spaced from the side wall **20** and the longitudinal rib **18**. The transverse rib **19** is formed integrally with the front wall and projects rearwardly from the front wall. Transverse rib **19** is also integral with the longitudinal rib **18** and the side wall between which it extends.

A pair of aligned lower ribs **23** project inwardly from the side wall **20** and the longitudinal rib **18** respectively as shown in FIG. 4. The ribs **23** are spaced below the lower surface of the step **22** a sufficient distance to permit the insertion of the blade thickness of the contact **9** between the two ribs and the lower step surface. An upper rib **24** projects from the longitudinal rib **18** and it is spaced above the upper surface of the step **21** a sufficient distance to enable the insertion of the blade thickness of the contact

9 therebetween. A supporting fulcrum or boss **25** projects into the hollow chamber **12** from the side wall **20** above the rib **24**. It is formed integrally with the front wall **14** and the side wall **20**. This fulcrum boss provides support for the contact blade, i.e., a surface against which the blade's outer edge can bear as it twists, and a limited engagement point from which some angular blade motion can occur.

The offset positioning of the pairs of ribs and steps **23**, **22**, and **24**, **21** as just set forth and as seen in FIG. 4 gives good spacing gaps therebetween while maintaining their effective vertical displacement small enough to effectively entrap the thin blade **9** between them. This is a feature that greatly facilitates the ease with which the housing can be manufactured. During the manufacturing operation abrasive pellets are used to eliminate imperfect edges formed during the molding of the housing and if the spaces or gaps between the ribs are too small the pellets become trapped in the small spaces. It may also be observed, particularly in FIGS. 3 and 4, that the rear most edges of the ribs have been beveled. This has been done to facilitate the mounting of the contact blades in the housing without necessitating an assembler having to hit the slots perfectly on center.

The contact blades **1** and **9** can be seen in FIGS. 5–7 to be mirror images formed for mating cooperation with the ribs **19** in the respective compartments **12** and **13** which are correspondingly mirror imaged. Contact **1** may be seen in FIG. 4 mounted in hollow compartment **13**. The detailed features of compartment **13** have not been described, it being understood that they are the same as those in compartment **12** being mirror images thereof.

Contact blade **1** can be seen to have its mounting section **6** formed in the shape of a U-shaped yoke as previously set forth. The yoke section is designed for cooperating engagement with the transverse rib **19** and the trapping ribs **23** and **24**. The yoke section has an upper leg **26** which is shown in FIG. 4 in trapped engagement between the trapping rib **24** and the upper step **21**. The bight section **27** extends over the rear surface of the transverse rib **19**, and the lower leg **28** of the yoke section **6** is in trapped engagement between the lower step **22** and the pair of lower trapping ribs **23**. When the rear cover **16** is secured in position by the clip member **17** it overlies the bight section **27** of the blade **1** securing the blade in the housing **10**.

It may be seen that the blade **1** has notched edges at **29** and **30** so that it will clear the ribs **23**, and the elongated section **5** of the blade is spaced from the inner edge of the yoke section **6** so that it will clear the rib **24**. The fulcrum boss **25** engages against the outer edge of the blade as seen in FIG. 4 to support the blade and insure that the outer edge of the blade is supported from the side wall **20** when one of the lamp pins is inserted in the lampholder. As previously mentioned the fulcrum boss provides a support against which the outer edge of the contact blade can bear as the blade twists and it also provides a limited engagement point from which angular motion can occur.

Looking now in particular at FIG. 8 it may be seen that the torsional contact section is positioned near the front wall of the housing **10**. This has the advantage of enabling fairly short bi-pins to be properly engaged. In other words, with such an arrangement it is only necessary that the bi-pins penetrate into the housing recess a short distance. It may also be seen that the offset of the contact blades is angled toward the front wall **14** and the slot **33**, see FIG. 2. This makes it unlikely that the lamp pins will push the contact blades toward the back wall of the housing beyond the end of the lamp pins or that a blade might twist out beyond the end of a lamp pin and become disengaged froma firm edge contact with the lamp pin.

Turning now to FIG. 2 the entrance slot **33** for the lamp pins may be seen formed in the upper side wall of the housing **10** and extending into an annular opening in the front wall **14** of the housing **10** which forms slot **34**

about the two section center post **35**. Looking at FIGS. 4 and 6 it can be seen that the upper portion of the inner edge of the contact making section **4** is shaped so that one of the lamp pins may ride over the arcuate surface of the center post and engage against the upper projecting edge portion **36** to cam the blade aside as it passes between the post **35** and projection **36**. This pin will then seat in seating notch **37** on the inner edge of the contact making section **4**. A lower projection or shoulder **38** resists the passage of this pin byeond the seating notch and the upper projection or shoulder **36** resists the pin's passing back by it. Of course, this resistance is due to the resiliency of the contact blade as well as the shape of the blade edge.

The other pin of the bi-pin lamp passes through the center slot in the center post and rides up over the other arcuate surface of the center post engaging the lower projection **38** of the other contact blade and camming the other blade aside as it passes between the post **35** and projection **38**. This other lamp pin will then seat in the seating notch **37** in the inner edge of the contact making section **4** of the other blade. The upper projection **36** resists the passage of this other pin beyond the seating notch while the lower projection **38** resists the pin's passing back by it.

Thus as may be seen from viewing FIG. 2, in operation as the pins **2** of the lamp **3** are inserted into the slot **34** through the entrance **33**, the lead pin passes wholly through the center slot in the center post. As the lamp is subsequently twisted, the upper pin engages against the inner edge of the contact making portion **4** camming it aside a maximum amount at *2b*. As this pin cams the torsion section **8** of the blade aside, the section in effect twists or turns around its longitudinal axis and it can be seen that this torsional displacement will be fairly substantial as compared to the position of the section when the pin **2** is fully seated as shown at *2c*. This is the operational characteristic which leads to the superior wiping action by the lamp pin offset contact making section **4**.

At about the same time the other lamp pin engages against the inner edge of the lower projection **38** of the contact making portion **4** of the other contact (**9** in the embodiment shown) camming it aside a maximum amount at *2d*. As this pin cams the torsion section **8** of contact blade **9** aside, the blade twists or turns around its longitudinal axis and is accordingly torsionally displaced. As the pin becomes fully seated as at *2e* some of the torsional forces are reduced and the blade retains less twist than it had at *2d*. Of course, as previously mentioned there is also some angular or flexing motion of each contact blade as the lamp pins are being seated. The relative moment of the torsional movement and of the angular or flexing movement varies depending upon the relationship of many factors, such as, the angle of the offset, the material used in constructing the blade, the thickness and width of the blade, etc. The combined torsional and angular displacement of the contact blades provides the necessary blade displacement for receiving the lamp pins.

In each of the contacts the trapping of the upper leg **26** of the yoke section on the transverse rib **19** by the trapping rib **24** (see FIG. 4) segregates the action of the torsion section **8** so that it does not affect other areas of the blade below the yoke section.

Turning now to a consideration of the lower or wire attaching section **7** of the blade, attention is directed once again to FIG. 4. Two conductor receiving passageways **39** are formed through the front wall **40** of the foot portion **41** of the housing **10** for each of the blade compartments **12** and **13** (see also FIG. 2). An unlocking slot **42** is also formed through the front wall of the foot **41** for each compartment. The angular moving section **7** (FIG. 6) is divided into two pressure locking portions **43** and **44** by the slit **45** which terminates in an aperture **46**. The aperture **46** prevents the slit **45** from enlarging.

Each of the hinged blade portions **43** and **44** has a longitudinally extending groove **47** which terminates in the outer lower edge of the pressure locking section. Each groove **47** is deepest at its terminus at the edge of the blade. Each of the blade sections **43** and **44** is positioned across a respective one of the conductor receiving passageways **35** with the deep edge of the grooves **47** aligned with the passageway. Thus when a conductor is inserted through a passageway **39**, it will engage against the front edge of the blade member **7** in one of the grooves and push the blade inwardly toward the rear wall of the housing **10** passing under the blade. The blade is resilient and presses against the conductor as it passes under the blade. If an attempt is made to extract the conductor from the passageway, the pressure locking section is tightened by the reversal of the conductor's movement and the extraction of the conductor is resisted. If it is desired to extract the conductor from the lampholder, a tool (not shown) may be inserted through the unlocking slot **42** against the blade and the blade may be pushed inwardly relieving the pressure on the conductor and allowing it to be more easily extracted from the lampholder. When it is desired to string a number of lampholders in parallel, two conductors may be attached to a single blade to form one continuing side of the parallel circuit. It should be recalled that both of the blades **1** and **9** are the same, only mirror images, and that both of the recesses **12** and **13** are the same, only mirror images, and therefore they have been discussed singularly, it being understood that they have the same operable construction.

Attention is directed to the fact that all of the bends or joints between the sections of both contact blade **1** and contact blade **9** are in the same direction with the exception of the offset joint which is at an angle. This arrangement enables the joints to be across the grain in a metal blade and this makes the joints stronger. It may also be observed that the lamp pin contacting edges of the blades may be formed when the blades are punched from a metal sheet. The adaptability of these blades to being shaped by punching during manufacture rather than by forming after punching of a blank, lends itself to good tolerance control and economy.

Looking once again at FIG. 4, it may be sen that the trapping of the lower leg **28** of the yoke section between the lower step **22** and the ribs **23** effectively segregates the action of the pressure locking section **7** from any effect on any portion of the blade above the yoke section. The ribs **23** in effect serve as fulcrums for the hinged action of the pressure locking contact-making section **7**.

Turning now to a description of the means by which my housing **10** is attached to a lighting fixture, attention is directed first to FIG. 2. A slot **48** may be seen passing through the foot section **40** and a pair of opposed grooves **49** are formed in opposed slot walls. A recessed seat **50** is formed at the bottom of the slot in the lower side wall of the foot member **41**. The plane of this seat is transverse to the axis of the slot. A mounting nut **51** is formed for cooperative engagement in the slot **48**.

Looking now at FIGS. 10–14, the nut **51** has a planar base section **52** with an aperture **53** formed centrally therethrough and a collar extension **54** protruding from one of its faces. The aperture **53** has screw threads which are continuous with threads formed in the collar portion **54**, as seen in FIG. 13. Four legs **55** project from opposed linear side edges of the base section above the face of the base section opposite the collar section **54**. Two of the legs are attached to each of the opposed linear sides of the base section and spaced inwardly of the ends of the other sides as shown in FIGS. 10–14. Each of the legs **55** has a tooth **56** at its outer end for engagement in one of the grooves **49**. It may be seen that the teeth on the two legs on the frontally positioned side, looking at FIG. 10, face in opposite directions. The teeth on the two legs on the opposite linear side also face in opposite directions from one another and in the same direction as the teeth on the first side.

The mounting nut is made from a resilient material and it is snapped into position by forcing it upwardly into the slot until the base portion **52** seats on the seat **50** at the entrance to the slot with the teeth **56** engaged in the grooves **49**. Thus the teeth **56** and the grooves **49** serve as cooperating catch means to hold the nut in position. A screw **57** can then be inserted through a fixture panel **58** as shown in FIG. 14 and through the slot **48** for threaded receipt in the nut **51**. Then the screw clamps the mounting nut, the lampholder foot and the fixture together rendering the integral catch means unnecessary except to carry and position the nut prior to its clamped engagement in the fixture. Of course, the nut could be used as a bracket with an unthreaded aperture. Then a nut could be used on the collar side for threadably mating with the screw.

While in accordance with the patent statutes, I have described what at present is considered to be the preferred embodiment of my invention, it will be obvious to those skilled in the art that numerous changes and modifications may be made therein without departing from the invention and it is therefore aimed in the appended claims to cover all such equivalent variations as fall within the true spirit and scope of the invention.

What I claim as new and desire to secure by Letters Patent of the United States is:

1. In an electric socket for receiving an inserted lamp in a housing having a wall with an opening therein for admitting the lamp pin, a torsion contact positioned in said housing, said torsion contact having a mounting section fixedly secured to said housing and a generally flat blade section, said flat blade section being generally parallel to said housing wall, said blade section including an upper planar contact-making section and a lower planar section joined by an intermediate twisted torsion section wherein at least portions of the planes defined by the upper planar contact making section and the lower planar section are offset, said contact making section partially obstructing said opening whereby an inserted lamp pin will resiliently displace said contact making section with a wiping action therebetween.

2. In an electric socket for accepting a contact pin or the like, a socket contact, said socket contact having a mounting section and a contact-making section, a socket housing having a front wall with an opening therein, said mouting section of said socket contact being stationarily mounted in said housing, and said contact making section having an edge extending across said opening for engaging said pin, and said contact making section having a twisted torsional portion wherein at least a portion of said contact making section will twist when a contact pin engages said edge.

3. In an electric socket for accepting a contact pin or the like, a socket contact, said socket contact having a mounting section and a contact-making section, a socket housing having a front wall with a contact pin receiving opening therein, said mounting section of said socket contact being stationarily mounted in said housing, and said contact-making section having an edge extending at least partially across said opening for engaging said pin, said edge having a recessed pin receiving seat, an upper pin restraining shoulder above said seat and a lower pin restraining shoulder below said seat and means including a twisted section formed in said contact making section for allowing at least a portion of the contact making section to twist about its longitudinal axis when a pin is pushed into said opening in engagement with said upper pin restraining shoulder.

4. As an article of manufacture, a torsion contact, said contact being of thin blade construction and comprising a first strip section in one plane and a second strip contact-making section in another plane formed with an edge for engaging a contact pin, said first section and said

second section having one linear axis in common and being twisted relative to each other whereby the plane of said second section being at an angle of not less than 4° and not greater than 20° with respect to the plane of said first section, said first section comprising a torsion bar for resiliently biasing said second section.

5. As an article of manufacture, a torsion contact for a lamp socket, said contact being of thin blade construction and comprising a mounting section, a pressure locking conductor-engaging section attached to one side of said mounting section and a first planar strip section attached at one of its ends to the other side of said mounting section, a planar lamp-contacting section at the other end of said first planar strip section, said lamp-contacting section and said first planar strip section being substantially aligned along one common longitudinally extending axis, and at least portions of the plane of said lamp-contacting section being offset from portions of the plane of said first planar strip section, and said lamp contact section and said first planar strip section being joined by a twisted section thereby effecting a torsion action in said contact when said contacting section is engaged by a lamp pin.

6. A socket for an electric lamp comprising a housing, a torsion contact of thin blade construction, said torsion contact having a mounting section fixedly secured to said housing to mount said contact, and said torsion contact having a movable contact-making section and an intermediate section, said contact-making section and said intermediate sections having one common longitudinal axis, and a twisted section joining said contact making section and said intermediate section wherein at least portions of said contact making section are offset from portions of said intermediate section at an angle between 4° and 20°.

7. In a socket for an electric lamp, a housing having a planar front wall, at least one contact mounted behind said front wall, said contact having a first planar section having a plane parallel to the plane of said front wall, said contact having a lamp contact-engaging section attached to one edge of said first planar section, and a U-shaped seating section, said seating section having one leg attached to another end of said first section, a pressure locking contact section attached to the other leg of said U-shaped section, a rib formed integrally with said front wall, said rib having a rear wall, said U-shaped seating section being engaged on said rib from the rear of said rib, with the bight portion of said seating section extending over said rear wall of said rib, and a cover member forming a portion of the rear wall of said housing secured over the bight section of said U-shaped seating section trapping it on said rib.

8. In a socket for an electric lamp, a housing having a contact-accommodating recess therein, said recess being defined by front, rear and two opposed side walls, a contact mounted in said recess and having a section exposed from the front of said socket for engagement with a lamp pin, said contact having a U-shaped seating section having a planar bight section and a planar leg on each respective side of said bight section, said U-shaped section having an edgewise relationship to said side walls of said hollow, a rib formed integrally with and extending between said opposed side walls, said rib having a top wall and a lower wall, said U-shaped seating section engaged on said rib, a trapping rib of said housing projecting from one of said side walls and trapping one of said legs of said U-shaped seating section between it and said rib, another trapping rib extending from one of said side walls and trapping the other of said legs of said U-shaped seating section between it and said rib, whereby said contact is operably mounted in said recessed housing.

9. A socket for bi-pin fluorescent lamps comprising a recessed housing with opposed front and rear walls in perpendicular relationship to opposed side walls, a longitudinal rib formed integrally with and projecting rearwardly from said front wall and dividing said housing into two recesses, a transverse rib in each recess formed integrally with and projecting rearwardly from said front wall, said transverse ribs being formed integrally with and extending between said longitudinal rib and a respective adjacent side wall, each of said transverse ribs having an upper step on its upper surface adjacent a respective side wall and a lower step projecting from its lower surface spaced from said respective adjacent side wall and from said longitudinal rib, a pair of aligned lower trapping ribs projecting inwardly from the sides of each recess below and adjacent to said lower steps, an upper trapping rib in each recess above said transverse rib and projecting inwardly from the side of said longitudinal rib above and across from said upper steps, a fulcrum boss in each of said recesses projecting inwardly from said side wall above said step and above said upper rib, a pair of thin blade single piece metal torsion contacts mounted in said housing, said contacts being mounted in a respective one of said recesses, said contacts each having a planar lamp-contacting section at one end, an intermediate planar elongated strip section connected to said lamp-contacting section, said planar sections being aligned along a common longitudinal axis and offset from one another angularly at their inner edges, a U-shaped seating section connected to said intermediate section, and a pressure locking lead-in conductor-engaging section connected to said U-shaped section, said torsion contacts being mounted with the bight of the U trapped on a respective one of said transverse ribs and over said steps by said rear wall and said trapping ribs, and each of said contacts having the outer edge of said planar sections engaged against said fulcrum boss, said housing having a foot portion projecting beyond said front wall, said foot having a slot opening from its lower wall to its upper wall forward of said front wall, a pair of linear grooves formed on inwardly facing side walls of said slot, said grooves running in a direction from front to rear, a mounting nut having a base portion and upstanding legs, a tooth at the upper end of each leg projecting from the side of said leg, said nut being mounted on said housing with said teeth resiliently engaged in said linear grooves and said base portion bridging said slot at said lower wall of said foot portion, an aperture through the base portion of said nut, said aperture being threaded to receive a screw to secure said socket to a lighting fixture, a lamp pin receiving slot through the upper wall of said housing remote from said mounting nut and opening to said planar lamp contacting sections of said torsion contacts and a plurality of conductor receiving passageways in the front wall of said foot portion opening to each respective one of said pressure locking lead-in conductor engaging sections of said torsion contacts.

References Cited

UNITED STATES PATENTS

2,113,792	4/1938	Ladd	339—191 X
2,374,221	4/1945	Lorenzen	339—258 X
2,449,736	9/1948	Bogen	339—52
2,465,326	3/1949	Lepore	240—51.11
2,596,056	5/1952	Tinnerman	189—36
2,663,852	12/1953	Kershaw	339—53
2,764,751	9/1956	Gnadke	340—225
2,955,276	10/1960	Sheldon	339—95
3,034,091	5/1962	Gluck	339—210 X
3,060,400	10/1962	Pistey	339—53
3,101,231	8/1963	Klostermann	339—176
3,152,853	10/1964	Scott	339—198 X
3,188,599	6/1965	Roberts	339—258 X
3,213,189	10/1965	Mitchell et al.	339—128 X

MARVIN A. CHAMPION, *Primary Examiner.*

EDWARD C. ALLEN, ALFRED S. TRASK, *Examiners.*

J. H. McGLYNN, *Assistant Examiner.*