VARIABLE CAMBER AIRFOIL

Filed June 24, 1965 5 Sheets-Sheet 1

FIG. 1.

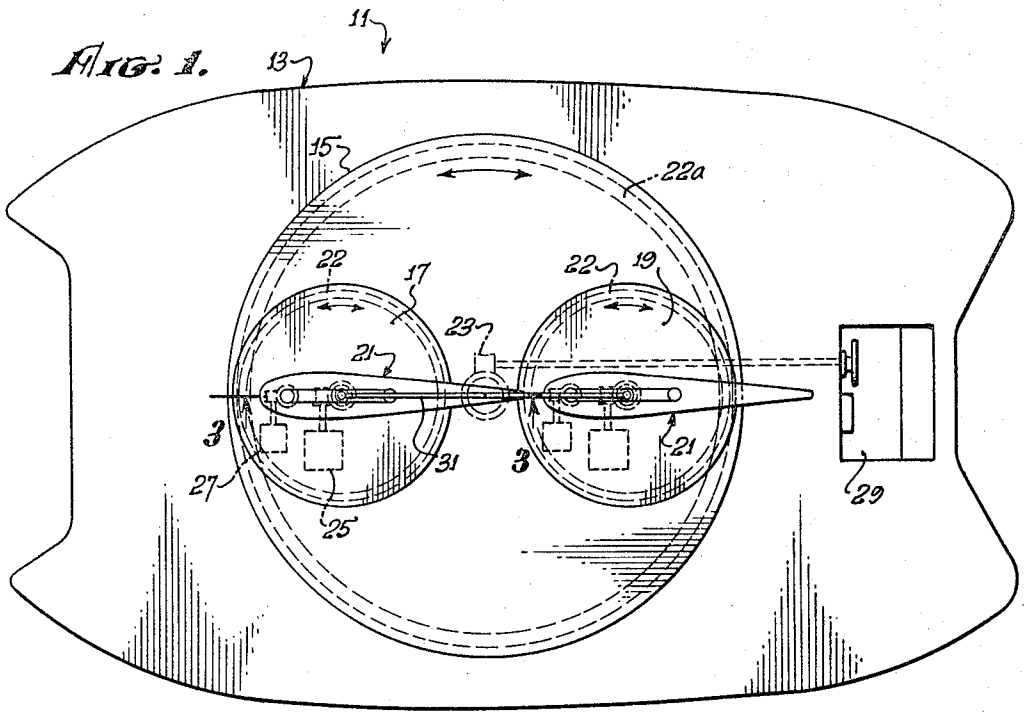

FIG. 13.

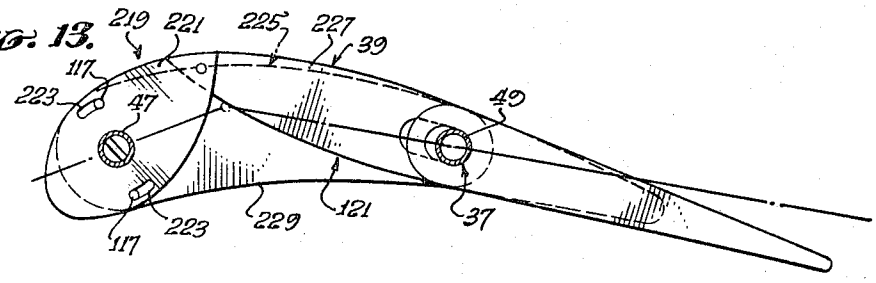

FIG. 2.

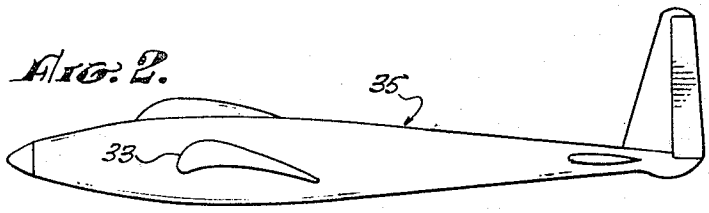

FIG. 2a.

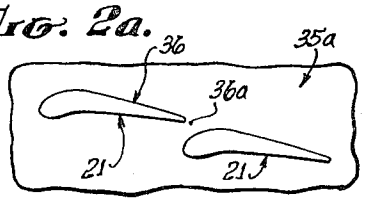

EDWARD MORRIS WRIGHT,
INVENTOR.

BY HIS ATTORNEYS
HARRIS, KIECH, RUSSELL & KERN.

VARIABLE CAMBER AIRFOIL

Filed June 24, 1965 5 Sheets-Sheet 2

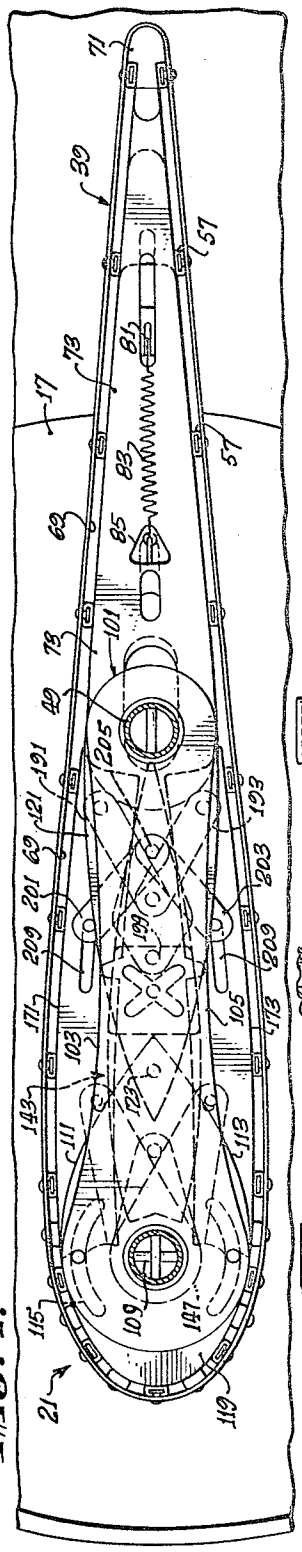

FIG. 4.

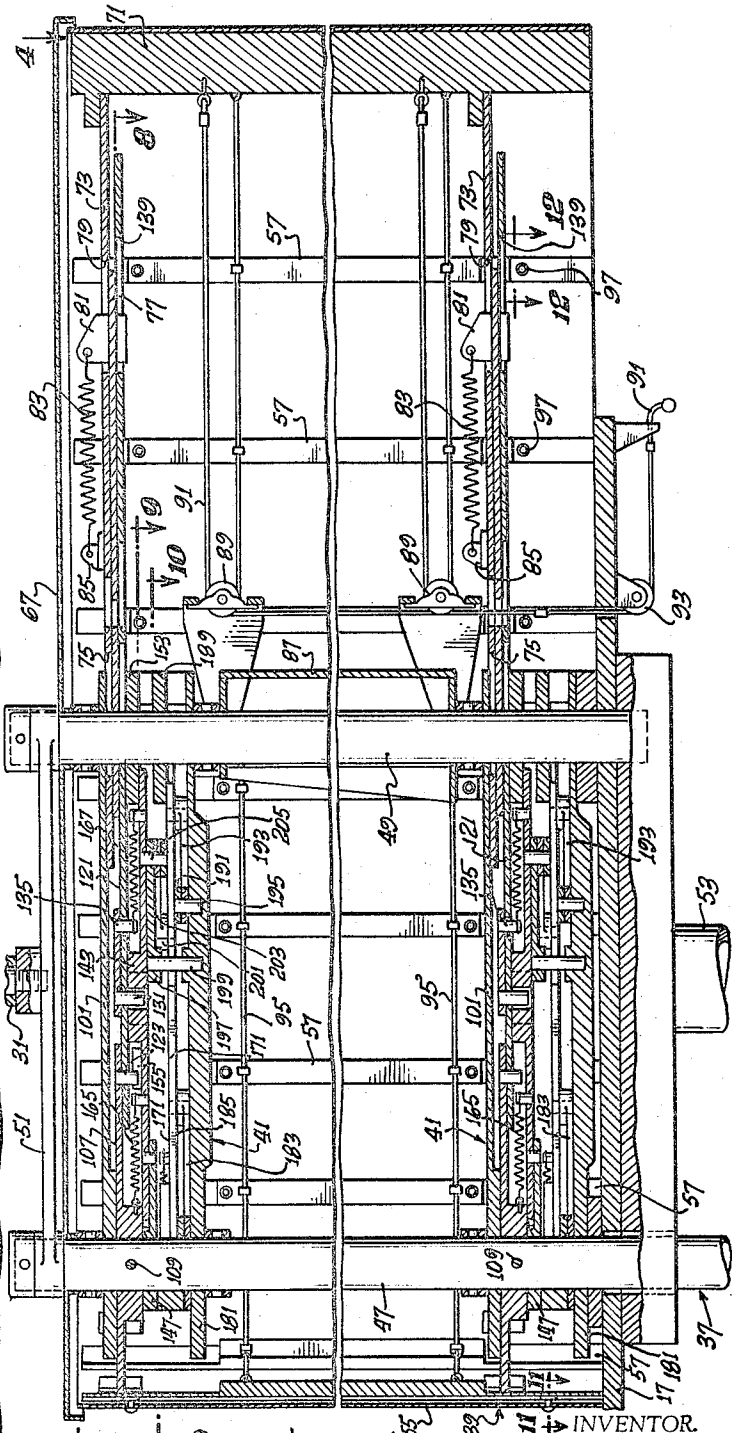

FIG. 5.

INVENTOR.
EDWARD MORRIS WRIGHT,
BY HIS ATTORNEYS
HARRIS, KIECH, RUSSELL & KERN

VARIABLE CAMBER AIRFOIL

Filed June 24, 1965 5 Sheets-Sheet 3

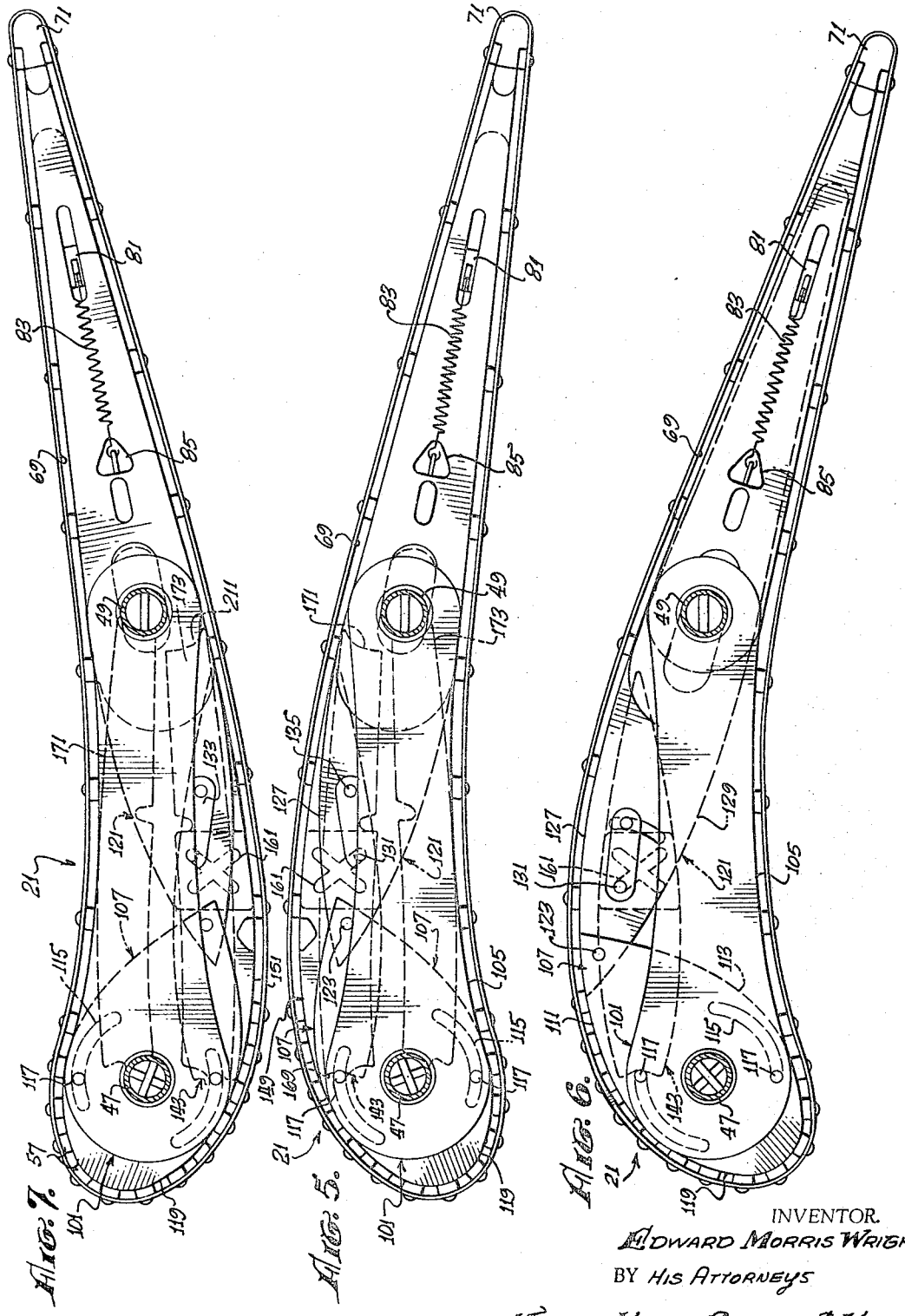

Fig. 7.

Fig. 5.

Fig. 6.

INVENTOR.
EDWARD MORRIS WRIGHT,
BY HIS ATTORNEYS
HARRIS, KIECH, RUSSELL & KERN

VARIABLE CAMBER AIRFOIL

Filed June 24, 1965 5 Sheets-Sheet 4

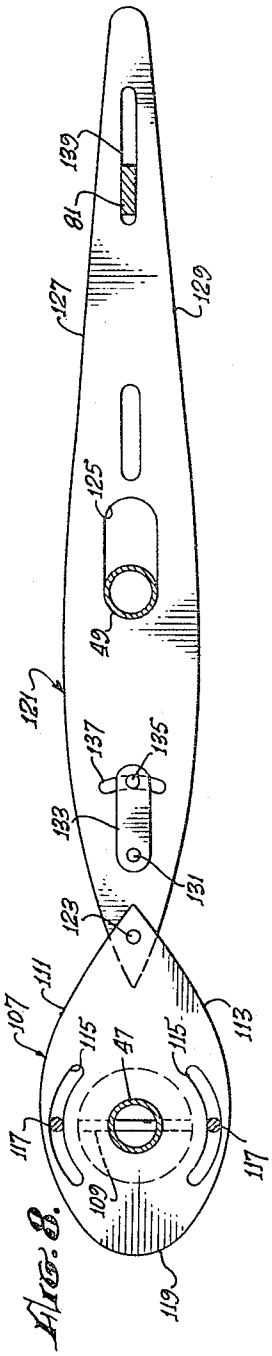

FIG. 8.

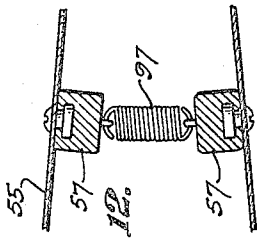

FIG. 12.

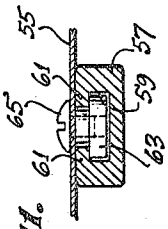

FIG. 11.

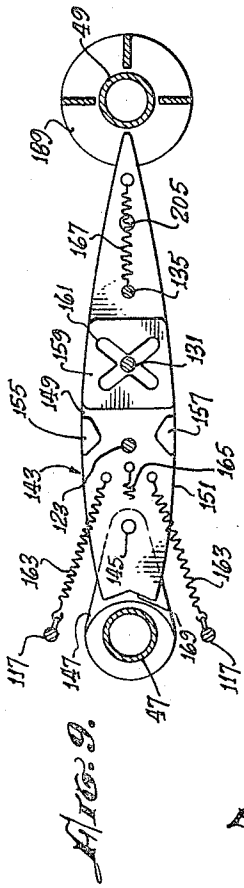

FIG. 9.

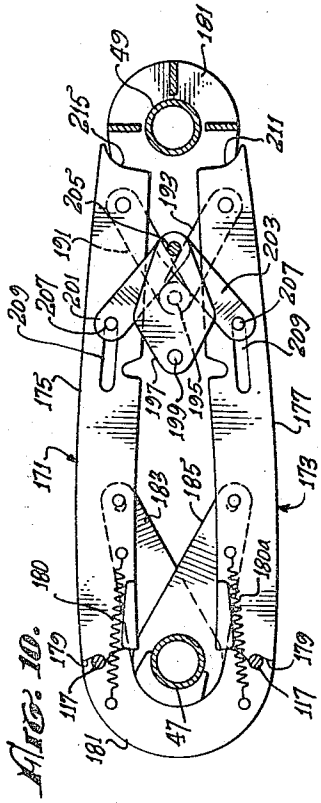

FIG. 10.

INVENTOR.
EDWARD MORRIS WRIGHT,
BY THEIR ATTORNEYS
HARRIS, KIECH, RUSSELL & KERN

VARIABLE CAMBER AIRFOIL

Filed June 24, 1965 5 Sheets-Sheet 5

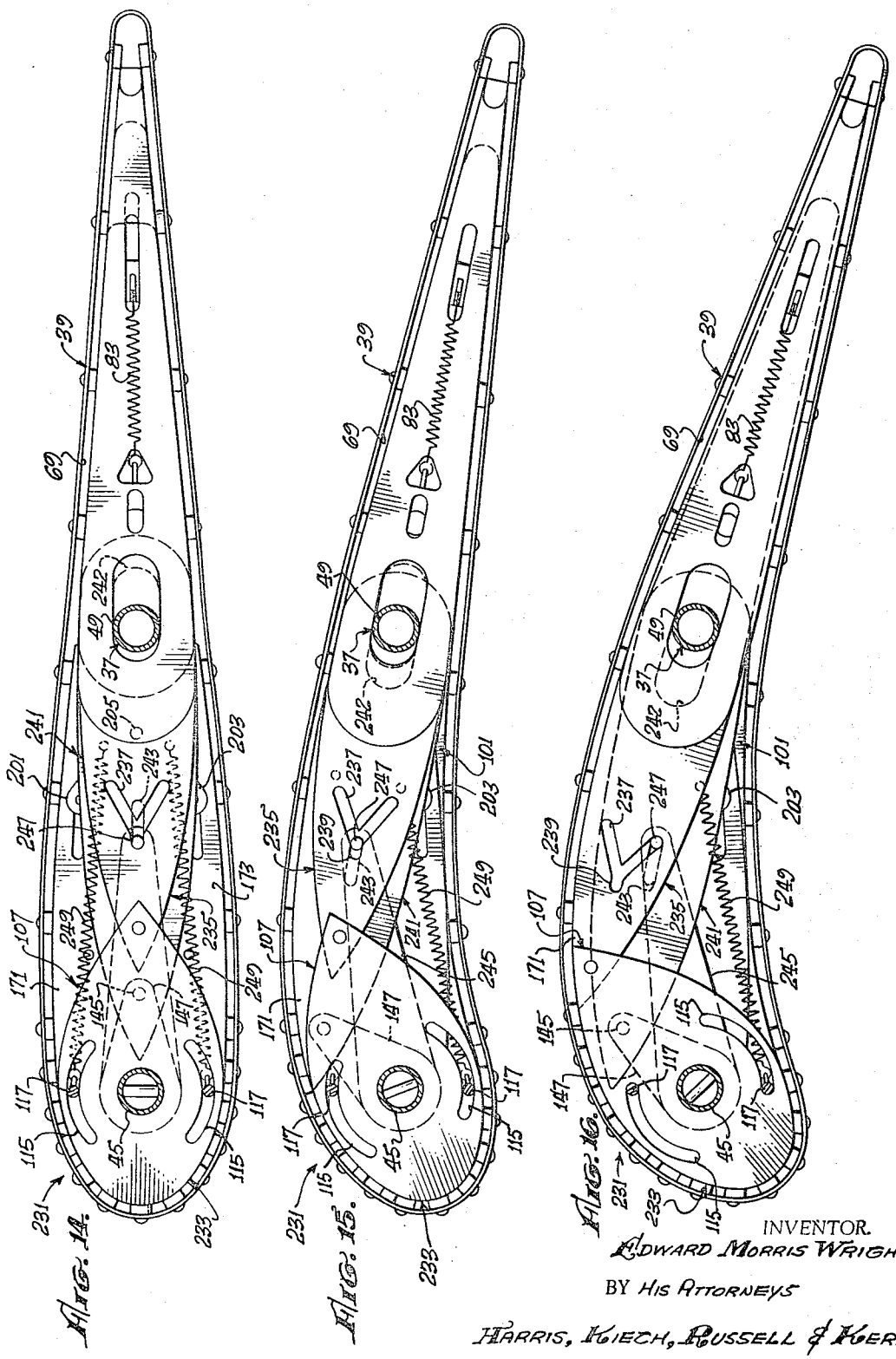

FIG. 14.

FIG. 15.

FIG. 16.

INVENTOR.
EDWARD MORRIS WRIGHT,
BY HIS ATTORNEYS
HARRIS, KIECH, RUSSELL & KERN

United States Patent Office

3,332,383

Patented July 25, 1967

1

3,332,383

VARIABLE CAMBER AIRFOIL

Edward Morris Wright, 6230 Reseda Blvd., Apt. 215, Reseda, Calif. 91335

Filed June 24, 1965, Ser. No. 466,633
15 Claims. (Cl. 114—39)

This invention relates to an airfoil and more particularly to a variable camber airfoil which is particularly adapted for use as the sail of a boat. However, the variable camber airfoil has many other applications, among which are airplane and glider wings, sails for wheel-mounted sailing vehicles, keels, rudders, and propellers.

The conventional sailboat is driven by a cloth sail which projects into the wind. These cloth sails cannot be made to assume an efficient aerodynamic shape for all sailing attitudes. Furthermore, in extremely light or heavy winds the sail shape is even more inefficient. Strong winds cause the cloth sails to dump much of the wind and in still stronger winds the cloth sails have to be lowered.

Conventional sailboats are rather difficult to operate requiring repeated raising and lowering of spinnakers and jibs particularly on a triangular course. The larger boats require several men to operate and to service the sails.

Accordingly, it is an object of this invention to provide a sailboat utilizing a sail in the form of an airfoil which will reduce the number of crew men required for sailing, increase the sailboat speed, and otherwise generally overcome the deficiencies of conventional sails and sailboats. Another object of this invention is to provide a sailboat utilizing a reversible camber airfoil which permits reversing the direction of travel of the boat merely by reversing the camber of the airfoil.

Another object of this invention is to provide a sailboat which simplifies the sailing operation.

Another object of this invention is to provide a sailboat including a floatable structure, a turntable mounted on the floatable structure for rotation relative thereto, first and second airfoils rotatably mounted on the turntable for rotation relative thereto and relative to each other, and means for varying the camber of each of the airfoils.

Still another object of this invention is to provide a variable camber airfoil utilizing a flexible skin assembly which is accurately shaped throughout its length into an airfoil, the airfoil contour being accurately retained as the camber of the airfoil is varied.

An object of this invention is to provide an airfoil utilizing a flexible skin assembly shaped to form an airfoil, the camber of which is varied by utilizing a plurality of members and causing them to engage and disengage the flexible skin assembly. More particularly, at least some of the members are contoured to shape the portion of the flexible skin assembly engaged thereby.

A further object of this invention is to provide a variable camber airfoil utilizing a flexible skin assembly which is shaped into the form of an airfoil by a forming section which has a substantially continuous airfoil-shaped periphery which engages and shapes the flexible skin assembly. According to another object of this invention the forming section includes a plurality of members movable relative to each other, each of the members having a forming surface with at least a partial airfoil contour which is engageable with the interior wall surface of the skin assembly. Means may be provided for moving the members to orient the forming surfaces to give the forming section an airfoil-shaped periphery of the first camber. The members engage and shape the skin assembly into an airfoil of said first camber. Means are also provided for moving the members to reorient the forming surfaces to give the forming section an airfoil-shaped periphery of a second camber, the members shaping the skin assembly into an airfoil of said second camber. Thus, the forming means supports and shapes an entire transverse section of the airfoil even while the camber thereof is being varied to maintain an accurate airfoil contour, More particularly, a plurality of the forming means are spaced longitudinally throughout the airfoil and the flexible skin assembly includes a plurality of longitudinally extending substantially rigid ribs which engage the forming means and adds stability to the skin assembly in the longitudinal direction.

2

Another object of this invention is to provide a variable camber airfoil including a supporting structure, a flexible skin assembly having an interior wall surface forming an enclosure about the supporting structure, a spreader member secured to the supporting structure and having a spreader surface engageable with the interior wall surface to shape the portion of the skin assembly engaged thereby, means for shaping the skin assembly into the form of an airfoil of a predetermined camber, means for disengaging at least some of the area of engagement between the spreader member and the interior wall surface, and means within the skin assembly for engaging the interior wall surface to reshape the skin assembly thereby altering said predetermined camber.

According to another object the camber of the airfoil is reversible and the spreader member has a second spreader surface for shaping the airfoil in the reverse camber position.

According to a particular object of this invention, the flexible skin assembly is shaped by a rotatable nose member rotatable between a first position and a second position, a tail member pivotally secured to the supporting structure and to the nose member, the tail member and the nose member shaping the skin assembly to form an airfoil of predetermined camber when the nose member is in the first position, an intermediate member pivotally secured to the supporting structure and engageable with the flexible skin assembly, and means responsive to movement of the nose member toward the second position to urge the intermediate member into engagement with the skin assembly to reshape the latter to vary the camber of the airfoil. According to another object of the invention, a pair of neutral members is mounted on the supporting surface for shaping a portion of the airfoil when the latter is in the neutral camber position.

Another object of this invention is to provide a variable camber airfoil including a flexible skin assembly supported and shaped by forming means, the flexible skin assembly being easily removable from the forming means.

A further object of this invention is to provide a variable camber airfoil utilizing a flexible skin assembly which is held taut as the camber of the airfoil is varied. This may be accomplished by providing a relatively rigid member on the flexible skin assembly and biasing such member outwardly from the supporting structure within the airfoil.

The invention, both as to its organization and method of operation together with further objects and advantages thereof may best be understood by reference to the fol-

lowing description taken in connection with the accompanying drawings in which:

FIG. 1 is a plan view of a boat using two variable camber airfoils as sails;

FIG. 2 is a side elevational view of an airplane having variable camber airfoil wings;

FIG. 2*a* is a fragmentary view similar to FIG. 2 showing an airplane utilizing two spaced variable camber airfoils to form the wings of the plane;

FIG. 3 is a fragmentary sectional view taken along line **3—3** in FIG. 1 and showing an airfoil constructed in accordance with the teachings of this invention;

FIG. 4 is a plan view taken along line **4—4** in FIG. 3 and showing the airfoil in the neutral camber position;

FIG. 5 is a plan view similar to FIG. 4 and showing the airfoil in the intermediate camber position;

FIG. 6 is a plan view similar to FIG. 4 and showing the airfoil in the full camber position;

FIG. 7 is a plan view similar to FIG. 4 showing the airfoil in a reverse camber position;

FIG. 8 is a sectional view taken along line **8—8** in FIG. 3 and showing the nose member and the tail member;

FIG. 9 is a sectional view taken along line **9—9** in FIG. 3 and showing the intermediate member;

FIG. 10 is a sectional view taken along line **10—10** in FIG. 3 showing the two neutral members;

FIG. 11 is a fragmentary sectional view taken along line **11—11** in FIG. 3 and showing a detail of construction of the flexible skin assembly;

FIG. 12 is a fragmentary sectional view taken along line **12—12** in FIG. 3 and showing another detail of the flexible skin assembly;

FIG. 13 is a partially schematic plan view of a second embodiment of the airfoil of the invention; and

FIG. 14 is a plan view similar to FIG. 4 showing a third embodiment of the variable camber airfoil of the invention in the neutral camber position;

FIGS. 15 and 16 are plan views similar to FIG. 14 showing the airfoil of the third embodiment in the intermediate and full camber position respectively.

Referring to the drawings, and in particular FIG. 1 thereof, reference numeral **11** designates a sailboat which includes a floatable structure **13** (e.g., a catamaran-type hull), a supporting member or circular turntable **15** mounted on the floatable structure for rotation relative thereto, circular mounting discs **17** and **19** mounted on the turntable for rotation relative thereto and relative to each other, and two identical variable camber airfoils **21** secured to the discs **17** and **19** respectively. The turntable **15** and discs **17** and **19** are preferably mounted for rotation about generally vertical and parallel axes all lying in substantially the same vertical plane. If desired, the discs **17**, **19** and the turntable **15** may be supported for rotation adjacent their peripheries by tracks **22** and **22*a*** respectively.

The airfoils **21** may be secured to the discs **17** and **19** in any suitbale manner and preferably extend generally vertically and perpendicularly to the discs and the turntable **15**.

Drive motors **23** and **25** drive the turntable **15** and the discs **17** and **19**, respectively. If desired, drive motors **27** may be employed to vary the camber of the airfoils **21**. The drive motors **23**, **25**, and **27** may all be controlled remotely as from a cockpit **29** formed in the sailboat **11**. Alternatively, the motors **23**, **25**, and **27** may be replaced by gear boxes or other mechanisms which would allow manual operation of the sails.

Preferably the rear of the forward airfoil **21** will be spaced slightly from the forward portion of the rear airfoil **21**. A rod **31** connects the two airfoils **21** to stabilize them. Although use of two of the airfoils **21** is preferred, other numbers thereof may be provided to form the sail for the boat **11**.

The sailboat **11** provides a wide range of adjustment

for various wind conditions. For example, under light wind conditions, a high camber setting is used for greater efficiency and maximum boat thrust. As the wind force increases, the degree of the cambers of the airfoils **21** can be decreased, or alternatively, the discs **17** and **19** may be rotated to further separate the airfoils. Upon further increases in wind velocity, it may be desirable to reduce the camber of the airfoils **21** and also rotate the airfoils on the discs **17** and **19** to increase the spacing therebetween. Additional adjustment may be had by rotating the turntable **15**. When desired, the turntable **15** and/or the discs **17** and **19** may be disconnected from their respective drives to allow the airfoils **21** to vane into the wind.

FIG. 2 illustrates the variable camber airfoil **21** being used to form a wing **33** of an airplane **35**.

FIG. 2*a* shows an airplane **35*a*** having a wing **36** which includes two variable camber airfoils **21**. The airfoils **21** are spaced to define a slot **36*a*** which causes air flow which significantly increases lift at low speeds. With the arrangement shown in FIG. 2*a*, drag is also reduced.

FIGS. 4 through 12 illustrate one form of airfoil construction. As shown in FIG. 3 basically each of the airfoils **21** includes a supporting structure **37**, a flexible skin assembly **39** forming an enclosure about the supporting structure, and a plurality of identical forming means or sections **41** spaced longitudinally on the supporting structure. The forming sections **41** serve to shape the flexible skin assembly **39** into an airfoil and to vary the camber thereof. The airfoil **21** may be of various heights and various numbers of the forming sections **41** may be employed. Usually at least two of the forming sections will be required to maintain an accurately shaped airfoil and if desired three or more of the forming sections may be provided.

The supporting structure **37** (FIG. 3) includes a vertical forward spar **47**, a vertical rear spar **49**, and a brace **51** connecting the upper ends of the spars. The forward spar **37** is mounted for rotation in the disc **17** and is suitably drivingly connected to the drive motor **27**. The forward spar **47** may rotate relative to the disc **17** and the brace **51**. The rear spar **49** is rigidly mounted on the disc **17**. A shaft **53** which is drivingly connected to the drive motor **25** rotatably mounts the disc **17** to the turntable **15**.

The flexible skin assembly **39** includes a strong flexible skin **55** of fiberglass or other suitable material forming an enclosure. A plurality of spaced, longitudinally extending, substantially rigid ribs **57** are releasably secured to the skin **55**. As shown in FIG. 11, each of the ribs **57** includes a longitudinal channel **59** extending longitudinally therethrough and partially closed by two flanges **61**. A nut **63** within the channel **59** receives a threaded fastener **65** which secures the skin **55** to the rib **57**. Thus, by sliding the threaded fastener **65** through the channel **59** the skin **55** may be removed from the ribs **57**.

As shown in FIG. 3, the skin **55** and a large number of the ribs **57** rest on the discs **17**. If desired, other suitable supporting means for the skin and ribs may be provided. As shown in FIGS. 4–7, a larger number of the ribs **57** is provided at the forward end of the airfoil **21**. The ribs **57** serve to stiffen the flexible skin **55** in the longitudinal direction and thus inhibit bending of the skin assembly about a transverse axis. As shown in FIG. 3, a suitable cover **67** may be provided to cover the upper end of the airfoil **21**.

The inwardly facing surfaces of the ribs **57** and the skin **55** define an interior wall surface **69** of the flexible skin assembly **39**. Various portions of the forming sections **41** engage the interior wall surface **69** to urge the flexible skin assembly into the shape of an airfoil.

Means are provided for keeping the skin assembly **39** taut regardless of the camber of the airfoil. Such means includes a longitudinally extending strut member **71** (FIGS. 3 and 9) and a transversely extending tightening member **73** having a slot **75** for receiving the rear spar **49**. The supporting structure **37** also includes a plate member

77 mounted on the rear spar 49 and extending rearwardly therefrom toward the strut 71. The tail member 73 includes an opening 79 for receiving an upstanding lug 81 on the plate member 77 and a spring 83 is tensioned between the lug 81 and a lug 85 on the tail member. Thus, the spring 83 urges the tightening member 73 rearwardly against the strut 71 causing the latter to move outwardly away from the rear spar 49 to keep the skin assembly taut.

It should be noted that a plurality of the springs 83 and associated members for keeping the skin taut may be provided. Normally one will be provided for each of the forming sections 41.

Means are also provided for loosening the skin assembly 39 to allow the latter to be easily removed from the forming sections 41 and the supporting structure 37. Such means includes a bracket 87 (FIG. 3), a pair of pulleys 89 rotatably carried by the bracket, and a cord 91 secured to the strut 71 and passing over the pulleys 89 and outwardly through the disc 17. As shown in FIG. 3, the cord 91 may also ride on a pulley 93 secured to the disc 17 and then extend transversely to a point adjacent the edge of the disc 17. By pulling on the cord 91, the strut 71 is caused to move to the left, as viewed in FIG. 3, thereby further tensioning the springs 83 and allowing the skin assembly 39 at the forward end thereof to be loosened from the forming means 41.

To further stabilize the skin assembly 39 without destroying the flexibility thereof, a plurality of elastic cords 95 are secured to the ribs 57 within the enclosure formed by the skin assembly. The flexible skin assembly 39 is also stabilized by a plurality of springs 97 (FIG. 12) which biases opposed ribs 57 toward each other. Thus, the springs 97 serve to pull the ribs 57 against the forming sections 41.

The forming sections 41 shape the flexible skin assembly 39, and stabilize the airfoil 21 primarily in the transverse direction. The forming sections 41 are identical and accordingly, only one of them need be described in detail. Each of the forming sections 41 may be considered as provided within a transverse section of the skin assembly 39, a portion of the forming section 41 being disposed in the forward portion of the skin assembly and another portion of the forming section being disposed in the aft portion of the skin assembly. An important feature of this invention is that each of the forming sections 41 has a substantially continuous airfoil shaped periphery in all of the camber positions. Thus, the skin assembly 39 is accurately shaped and sturdily supported.

With reference to FIGS. 3 and 4, the uppermost member of the forming section 41 is a spreader member 101 which is rigidly secured to the spars 47 and 49 and extends generally transversely therebetween. The spreader member 101 is generally plate-like and has opposed transverse spreader or forming surfaces 103 and 105 which engage the interior wall surface 69 to shape the portion of the skin assembly 39 engaged thereby (FIGS. 5–7). The spreader surfaces 103 and 105 are curved to form a portion of an airfoil and thus serve to assist in shaping the skin assembly 39 into an airfoil contour in the intermediate and full camber position shown in FIGS. 5–7.

A nose member 107 is secured to the spar 47 by a pin 109 for rotation with the spar. The nose member 107 (FIG. 8) includes opposed transverse nose or forming surfaces 111 and 113 which have at least a partial airfoil contour and a pair of arcuate limiting slots 115 which receive a pair of longitudinally extending rods 117 which may be used to limit the rotational movement of the nose member. The rods 117 are fixed to the spreader 101. The nose member 107 is generally teardrop-shaped in plan and has a nose end 119 which shapes the forward tip of the skin assembly 39 in all of the various camber positions (FIGS. 4–7). The nose surfaces 111 and 113 are out of engagement wgith the interior wall surface 69 in the position shown in FIGS. 4, 5, and 7 and the surface 111 engages the interior wall surface in the full camber position shown in FIG. 6 to cause the areas of the skin assembly 39 so engaged to assume a partial airfoil contour. In the reverse full camber position the surface 113 would engage and shape a portion of the skin assembly 39.

Preferably, the nose member 107 is the only member of the forming section 41 which is mounted on the spar 47 for rotation therewith. The nose member 107, when rotated by the spar 47, initiates and causes movement of the various members of the forming section 41 as described hereinafter and accordingly functions as a control member.

A transversely extending tail member 121 (FIG. 8) is pivotally mounted to the nose member 107 by a pin 123 and includes a slot 125 which receives the spar 49 to allow the tail member to rotate and translate with respect to the spar 49. The slot 125 also controls and limits the forward movement of the tail member 121. The tail member 121 is generally in the shape of a plate-like fish and is mounted beneath the nose member 107 and the plate member 77. The tail member 121 includes generally opposed tail or forming surfaces 127 and 129 extending generally transversely through the aft section of the skin assembly 39 and engaging such aft portion of the interior wall surface 69 over substantially the entire length of the tail surfaces to shape the aft portion of the skin assembly. The member 73 may be similarly shaped and assist the tail member 121 in shaping the aft portion of the skin assembly 39. The tail surfaces 127 and 129 shape the aft portion of the skin assembly 39 in all of the camber positions illustrated in FIGS. 4–7. It is apparent that by rotation of the nose member 107 from the position illustrated in FIG. 4 to that illustrated in FIG. 5 that the tail member 121 will be caused to rotate in the clockwise direction and to translate slightly. Additional rotation of the nose member 107 to the position shown in FIG. 6 causes the forward portion of the tail surface 127 to engage the skin assembly 39. The rotation of the tail member 121 causes the aft portion of the airfoil 21 to pivot as indicated in FIG. 5–7.

A downwardly extending lug 131 (FIG. 8) pivotally mounts a tab 133 carrying a spring-retaining element 135 which is received by an arcuate slot 137 in the tail member 121. The tail member 121 has an elongated slot 139 adjacent the rear end thereof for receiving the lower portion of the lug 81.

An intermediate member 143 (FIGS. 3 and 9) is mounted beneath the tail member 121. The intermediate member 143 is pivotally secured by a pin 145 to a nose link 147 which is loosely mounted on the spar 47. The intermediate member 143 has generally opposed, transversely extending intermediate or forming surfaces 149 and 151 which engage the interior wall surface 69 in the intermediate camber position (FIGS. 5 and 7) to shape the portion of the skin assembly so engaged. Thus, the intermediate member 143 is operative only in the intermediate camber positions to assist in the shaping of the airfoil 21. The rear end of the intermediate member 143 is held in position by a disc 153 (FIG. 3) secured to the spar 49 and the various members below the intermediate member.

The intermediate member 143 includes two upwardly extending cam 155 and 157 and an upwardly directed lock 159 having an X-shaped groove 161 formed therein. The groove 161 receives the depending lug 131 and the pin 123 projects downwardly to cooperate with the cams 155 and 157. A pair of springs 163 is secured to the rods 117 and to the intermediate member 143 and two other springs 165 and 167 connect the intermediate member to the nose member 107 and the spring-retaining element 135 on the tail member 121, respectively.

In the neutral camber position shown in FIGS. 4 and 9, the springs 163, 165, and 167 tend to impart no movement to the intermediate member 143. To vary the camber from the neutral position illustrated in FIG. 4 to the intermediate camber position illustrated in FIG. 5, the nose member 107 is rotated counterclockwise by the drive

motor 27. Such rotation of the nose member 107 and the consequent movement of the tail member 121 moves the longitudinal axes of the springs 165 and 167 and causes them to exert a slight upward force (as viewed in FIG. 9) on the intermediate member 143. Upon still further movement of the nose member 107 the pin 123 will engage the cam 155 and urge the latter and the intermediate member 143 upwardly thereby causing the intermediate member to pivot about the pin 145. Slight upward movement of the intermediate member 143 unbalances the forces exerted by the springs 163, 165, and 167 and causes them to toggle the intermediate member 143 to the position shown in FIG. 5 wherein the intermediate surface 149 engages the interior wall surface 69 of the skin assembly 39 to shape a portion thereof. As shown in FIG. 5 the forward end of the intermediate member 243 forms a V-shaped notch 169 which engages the rod 117 in the intermediate camber position. The path of travel of the intermediate member 143 between the neutral intermediate camber positions is controlled by the nose link 147 and the X-shaped groove 161. Movement of the intermediate member 143 is halted by the engagement of the V-shaped notch 169 with the rod 117 and the engagement of the lug 131 in one end of the groove 161. Thus, the motion of the intermediate member 143 is accurately controlled to permit the latter to accurately shape a portion of the skin assembly 39 in the intermediate camber position.

In returning to the neutral camber position from the intermediate position, the lug 131 engages one end of the X-shaped groove 161 to urge the intermediate member 143 back toward the neutral camber position. In moving from the intermediate position of FIG. 5 to the full camber position of FIG. 6, means which are described hereinafter are provided to prevent additional outward movement of the intermediate member.

A pair of neutral members 171 and 173 (FIGS. 3, 4, and 10) having neutral or forming surfaces 175 and 177, respectively, are provided for engaging a portion of the flexible skin assembly 39 to shape the portion thereof engaged thereby in the neutral camber position. Each of the neutral members 171 and 173 has a notch 179 formed at one end thereof for engaging the rods 117. A pair of springs 180 and 180*a* which are secured to the neutral members and to a lower spreader member 181 bias the notches 179 of the neutral members against the rods 117. The lower spreader member 181 is preferably substantially identical to the spreader member 101 and assists in shaping the airfoil 21 in the same manner as the spreader member 101. The rods 117 are mounted on the spreaders 101 and 181 and at least portions of most of the elements of the forming section 41 are sandwiched between the spreaders. Two links 183 and 185 are mounted for rotation on the spar 47 and are pivotally secured to the neutral members 171 and 173, respectively.

Upward movement of the rear portions of the neutral members 171 and 173 is prevented by a disc 189 (FIGS. 3 and 9) mounted on the spar 49. Two levers 191 and 193 are pivotally mounted by a pin 195 to the lower spreader member 181 and are also pivotally mounted to the neutral members 171 and 173, respectively. A link 197 is rotatably mounted on a stub shaft 199 secured to the lower spreader member 181 and also pivotally mounted to a second pair of levers 201 and 203 by a pin 205. Fasteners 207 are slidably received by slots 209 in the neutral members 171 and 173 and mount the levers 201 and 203 for movement along such slots.

As shown in FIGS. 3 and 9, the pin 205 extends upwardly into the intermediate member 143. It is through the pin 205 that motion of the intermediate member 143 is transmitted to the neutral members 171 and 173.

As indicated above, the neutral members assist in shaping the airfoil 21 in the neutral camber position illustrated in FIG. 4. Accordingly, in moving from the neutral camber position to the intermediate or full camber position it is necessary to disengage at least a portion of the neutral members 171 and 173 from the interior wall surface 69. When the intermediate member 143 is moved to the intermediate position of FIG. 5, the pin 205 is carried therewith. This causes the link 197 to pivot counterclockwise and to exert an upwardly directed force (as viewed in FIG. 10) on the lever 203 thereby causing the latter to urge the neutral member 173 inwardly until an end 211 thereof engages the spar 49. Such inward movement of the neutral member 173 disengages it from the interior wall surface 69 thereby allowing the spreader surface 105 to shape that portion of the skin assembly 39 formerly shaped by the neutral surface 177. During the inward movement of the neutral member 173, the neutral member 171 remains substantially stationary as the slot 209 allows the lever 201 to translate and therefore no outwardly directed force is exerted on the neutral member 171. Furthermore, even when the fastener 207 reaches the end of the slot 209, the neutral member 171 is not urged outwardly because no torque sufficient to overcome the force of the spring 180 is applied to the neutral member 171.

Of course, by merely rotating the nose member 107 in the clockwise direction the intermediate member 143 is urged downwardly in the same manner as described above to cause the airfoil 21 to assume a reverse camber position as illustrated in FIG. 7. In this position, the neutral member 171 is urged inwardly until an end 215 thereof engages the spar 49. During the inward movement of the neutral member 171, the neutral member 173 is prevented from moving outwardly in the same manner as the neutral member 171 was prevented from moving outwardly when the airfoil was in the position shown in FIG. 5.

Means are provided to prevent substantial outward movement of the intermediate member 43 beyond the position shown in FIG. 5. The pin 205 prevents the intermediate member from moving independently of the link 197. The link 197 can rotate only to the extent permitted by the lever 203 and the neutral member 173. When the end 211 engages the spar 49 (FIG. 5), rotary movement of the link 197 is halted. Thus, the intermediate member 143 is prevented from moving outwardly substantially beyond the position illustrated in FIG. 5.

In the full camber position of FIG. 6, the neutral members 171 and 173 and the intermediate member 143 have no effect in shaping the airfoil 21. In the full camber position, the airfoil 21 is shaped by the spreaders 101, 181, the nose member 107, and the tail member 121.

As illustrated in FIG. 7, by merely rotating the nose member 107 in the clockwise direction the camber of the airfoil 21 may be reversed. The reversed camber position may be either full or intermediate.

Thus, by utilizing all of the members illustrated in FIGS. 3–12, a reversible camber airfoil having neutral, intermediate, and full camber positions is provided. By eliminating certain of the members, an airfoil having fewer camber positions or one which is not reversible may be provided. For example, by eliminating the intermediate member 143 and its associated elements, a reversible camber airfoil having neutral and full camber positions is provided. The neutral members 171 and 173 may be eliminated; however, the resulting airfoil will not be shaped as accurately in the neutral position.

An important feature of this invention is that the aft section of the airfoil 21 can be pivoted relative to the fore section and the periphery of the fore section can be altered to vary the camber of the airfoil. Thus, the tail member 121 is mounted on the spar 49 and rotates thereon to pivot the aft section while the various members in the fore section vary the periphery thereof along substantially the entire length of the fore section.

FIG. 13 illustrates another embodiment of this invention. An airfoil 219 has a nonreversible camber and is movable only between an intermediate camber position

and a full camber position. The supporting structure **37** and the flexible skin assembly **39** illustrated in FIGS. 3–7 are identical to the corresponding assemblies in the embodiment of FIG. 13 and are designated by the same reference numerals. Likewise, the tail member **121** of the airfoil **219** is identical with the tail member of the first embodiment. The airfoil **219** includes a nose member **221** which is identical to the nose member **107** except that the nose member **221** has a pair of limiting slots **223** which are shorter than the limiting slots **115** of the first embodiment. The nose member **221** and the tail member **121** are mounted on the supporting structure **37** and are pivotally secured together in the same manner as in the first embodiment.

The airfoil **219** includes a spreader member **225** having opposed spreader or forming surfaces **227** and **229** which extend generally transversely through the forward portion of the airfoil. The spreader **225** is identical to the spreader **101** and is mounted on the supporting structure **37** in the same manner as in the first embodiment except that the spreader surface **227** is shaped so as to engage and shape the forward portion of the skin assembly **39** in the intermediate camber position. Accordingly, the embodiment of FIG. 13 does not require the intermediate member **143** and the neutral members **171** and **173** and their associated elements. The airfoil **219** may include the skin-tightening means illustrated in the first embodiment.

In the solid-line or full camber position shown in FIG. 13, the nose member **221**, the tail member **121** and the spreader surface **229** combine to shape the airfoil. In the intermediate camber position, the tail member **121**, the spreader surfaces **227** and **229** and a portion of the nose member **221** combine to shape the airfoil. In varying the camber, the nose member **221** is rotated in the same manner as the nose member **107**. As in the first embodiment two of the spreader members **225** may be provided for each of the transverse forming sections, one being provided on each side of the nose and tail members respectively.

An airfoil **231** representing a third embodiment of this invention is illustrated in FIGS. 14–16. The airfoil **231** is identical with the airfoil **21** in every respect except that the former includes a plurality of longitudinally spaced forming sections **233** which differ in some respects from the forming sections **41** of the latter.

The forming section **233** includes a tail member **235** which is identical to the tail member **121** except that in the former the elements **131**, **133**, **135**, and **137** have been removed and in their place is a Y-shaped slot **237**. The slot **237** has a stem portion **239** which is considerably shorter than the legs of the Y.

The forming section **233** also includes an intermediate member **241** having an opening **242** for receiving the spar **49** and a slot **243** adjacent the forward end thereof. The arm **245** carries an upstanding pin **247** which is received by the slots **237** and **243**. Two springs **249** connect the rods **117** and the intermediate member **241**. The intermediate member **241** carries the depending pin **205** (FIG. 14) for operating the neutral members **171** and **173** in the same manner as described in connection with the airfoil **21**.

Each of the forming sections **233** includes the spreader members **101** and **181** and the nose member **107**. The intermediate member **241** is pivotally secured to the nose link **147** which is rotatably mounted on the spar **45**.

The operation of the airfoil **231** is as follows. In the neutral camber position illustrated in FIG. 14 the nose member **107**, the neutral members **171** and **173** and the tail member **235** combine to shape the flexible skin assembly **39** in the same manner as previously described in connection with the airfoil **21**. To adjust the camber to the intermediate camber position shown in FIG. 15, the nose member **107** is rotated counterclockwise to move the tail member **235** and the Y-shaped slots **237**. Such movement of the slot **237** moves the pin **247** thereby causing the arm **245** to rotate. Movement of the pin **247** in the counterclockwise direction urges the intermediate member **241** upwardly causing the intermediate member to pivot about the pin **45** on the nose link **147**. When the pin **145** moves "off center" with respect to the springs **249**, the intermediate member **241** is toggled to the position illustrated in FIG. 15 in which it engages and shapes a portion of the flexible skin assembly **39**. Additional upward movement of the intermediate member **241** is prevented by the pin **247** which in the position of FIG. 15 has reached the end of the slot **243** formed in the intermediate member. Upward movement of the intermediate member **241** moves the pin **205** upwardly to at least partially disengage the neutral member **173** from the interior wall surface **69** as described in connection with the airfoil **21**.

To return the airfoil to the neutral camber position, the nose member **107** is rotated clockwise thereby causing the pin **247** to urge the intermediate member back to the position shown in FIG. 14.

To move to the full camber position shown in FIG. 16, the nose member **107** is rotated counterclockwise an additional amount to thereby move the tail member **235** upwardly into engagement with the forward portion of the interior wall surface **69** as shown in FIG. 16. The arm **245** and the pin **247** remain substantially stationary during such movement because the pin **247** and the tail member **235** may move relative to each other as permitted by the Y-shaped slot **237**. Thus, the intermediate member **241** remains substantially stationary as the airfoil is moved from the intermediate to the full camber position.

Of course, clockwise rotation of the nose member **107** from the full camber position will cause movement of the airfoil to the intermediate and then the neutral camber positions. The camber of the airfoil **231** may be reversed merely by rotating the nose member **107** clockwise from the neutral camber position.

The airfoil **231** is identical to the airfoil **21** in all respects not specifically referred to. For example, the airfoil **231** includes the flexible skin assembly **39**, the supporting structure **37**, and the skin-tightening means including the spring **83**, all of which are identical to the corresponding elements in the airfoil **21**.

Thus, the present invention provides an airfoil of variable and reversible camber, the contour of the airfoil being accurately adjusted and controlled by the plurality of forming sections held within the flexible skin assembly. Although the skin assembly of the airfoil is flexible it is held tightly on the forming means regardless of the camber position of the airfoil. When fewer camber positions are required, the construction of the airfoil may be simplified as exemplified by the embodiment illustrated in FIG. 13. An important advantage of the embodiment of FIGS. 14–16 is the ease with which the forming sections **233** can be moved from one position to another. When the airfoil of the present invention is utilized as a sail for a boat, the size of the crew can be reduced, the efficiency of the boat is increased, the sailing operation is simplified as the airfoil sail need not be frequently raised and lowered, and the boat can be driven in the reverse direction by merely reversing the camber of the airfoil.

Many changes, modifications, and substitutions may be made by one having ordinary skill in the art without necessarily departing from the spirit and scope of this invention.

What is claimed is:

1. A variable camber airfoil comprising:

a flexible skin assembly forming an enclosure and adapted to assume the contour of an airfoil, said skin assembly having an interior wall surface;

a supporting structure within said flexible skin assembly;

forming means having an airfoil-shaped periphery mounted on said supporting structure for engaging said interior wall surface to urge said flexible skin

assembly to assume the contour of an airfoil of a first camber, said forming means including a plurality of members movable relative to each other, at least some of said members engaging said interior wall surface and shaping said flexible skin assembly;

means for disengaging at least some of the area of engagement between at least one of said members and said interior wall surface;

second forming means for engaging said interior wall surface to reshape said skin assembly and vary the camber of the airfoil; and

first resilient means carried in said supporting structure and engaging said flexible skin assembly urging said skin assembly away from said supporting structure for maintaining said skin assembly taut;

said flexible skin assembly including second resilient means disposed within said enclosure urging said skin assembly toward said forming means providing substantially continuous engagement of said skin assembly and forming means, with said skin assembly slidable relative to said forming means and supporting structure.

2. A variable camber airfoil comprising:

a flexible skin assembly forming an enclosure and adapted to assume the contour of an airfoil, said skin assembly having an interior wall surface;

a supporting structure within said enclosure;

a plurality of plate members mounted on said supporting structure for movement relative to each other, each of said members being symmetrical along the center line of the airfoil and having symmetrically disposed forming surfaces thereon contoured to form at least a portion of an airfoil;

means for moving said members so that at least some of said forming surfaces engage said interior wall surface to urge said flexible skin assembly to assume the contour of an airfoil of a given camber;

means for disengaging at least some of the areas of engagement between said forming surfaces of said members and said interior wall surface; and

means for moving said members so that at least one other of said forming surfaces engages said interior wall surface to reshape said skin assembly and vary the camber of the airfoil to a reverse camber condition.

3. A variable camber airfoil comprising:

a flexible skin assembly forming an enclosure and adapted to assume the contour of the airfoil, said skin assembly having an interior wall surface;

a supporting structure within said skin assembly;

a forming section mounted on said supporting structure and extending transversely through said enclosure and including a plurality of plate members movable relative to each other and engageable with said interior wall surface to support and shape the latter, each of said members having a forming surface with at least a partial airfoil contour which is engageable with said interior wall surface;

means for moving said members to orient said forming surfaces to give said forming section an airfoil-shaped periphery of a first camber, said members engaging and shaping said skin assembly into an airfoil of said first camber;

means for moving said members to reorient said forming surfaces to give said forming section an airfoil-shaped periphery of a second camber, said members shaping said skin assembly into an airfoil of said second camber, and

first resilient means carried in said supporting structure and engaging said flexible skin assembly urging said skin assembly away from said supporting structure for maintaining said skin assembly taut;

said flexible skin assembly including second resilient means disposed within said enclosure urging said skin assembly toward said plate members providing substantially continuous engagement of said skin assembly and plate members, with said skin assembly slidable relative to said plate members and supporting structure.

4. A variable camber airfoil as defined in claim 3 wherein a plurality of said forming sections are provided on said supporting structure in longitudinally spaced relationship to shape and support said flexible skin assembly.

5. An airfoil as defined in claim 3 wherein said flexible skin assembly includes longitudinally extending relatively rigid ribs, a skin, and means for attaching said skin to said ribs, with said ribs slidably engaging said forming section to provide longitudinal support for the skin assembly.

6. A variable camber airfoil comprising:

a flexible skin assembly including a strong flexible skin forming a longitudinally extending enclosure, a plurality of spaced longitudinally extending substantially rigid ribs, and means carried on said skin and engaging said ribs securing the skin to the ribs along an axis normal to the skin while providing for sliding of the skin longitudinally along the ribs;

a supporting structure within said enclosure;

means mounted on said supporting structure for engaging said flexible skin assembly for shaping the latter into the form of the airfoil; and

means on said supporting structure for varying the camber of the airfoil.

7. A variable camber airfoil comprising:

a supporting structure;

a continuous flexible skin assembly including a skin forming an enclosure having an interior wall surface surrounding said supporting structure and a first member disposed longitudinally at an interior edge of said skin;

forming means for engaging said interior wall surface to urged said flexible skin assembly into the shape of the airfoil with constant perimeter, said airfoil being of a given camber;

means for varying the camber of the airfoil; and

means between said supporting structure and said first member for urging said member outwardly to keep said skin assembly taut as the camber is varied while maintaining the constant airfoil perimeter.

8. An airfoil as defined in claim 7 wherein said member is a longitudinally extending strut and wherein said last-mentioned means includes a second member engaging said longitudinally extending strut mounted on said supporting structure for transverse movement relative thereto and biasing means secured to said supporting structure and to said second member for urging said second member into engagement with said strut to urge said strut outwardly to keep said skin assembly taut.

9. A variable camber airfoil comprising:

a supporting structure including first and second parallel shafts;

a flexible skin assembly forming an enclosure having an interior wall surface about said supporting structure;

a rotatable nose member secured to said first shaft of said supporting structure and rotatable about the axis of said first shaft between a first position in which said nose member engages said inner wall to shape a portion of said flexible skin assembly and a second position;

a tail member pivotally secured to said second shaft of said supporting structure and to said nose member, said tail member and said nose member shaping said skin assembly to form an airfoil of a predetermined camber when said nose member is in said first position;

an intermediate member pivotally secured to said supporting structure and being engageable with said interior wall surface; and

means responsive to movement of said nose member

toward said second position to urge said intermediate member into engagement with said interior wall surface to reshape said skin assembly to vary the camber of the airfoil.

10. A variable camber airfoil comprising:

a supporting structure;

a flexible skin assembly having an interior wall surface forming an enclosure about said supporting structure;

a nose member mounted on said supporting structure for rotation from a neutral position through an intermediate position to a full camber position in which said nose member engages said interior wall surface to shape the portion of the skin assembly engaged thereby;

a tail member pivotally mounted on said supporting structure and pivotally secured to said nose member, said tail member engaging said interior wall surface to shape the portion of said flexible skin assembly engaged thereby;

a pair of neutral members mounted on said supporting structure for movement relative thereto and engaging said interior wall surface when said nose member is in said neutral position to shape the portion of said flexible skin assembly engaged thereby, said tail and neutral members shaping said skin assembly into an airfoil of neutral camber;

means responsive to movement of said nose member toward said intermediate position to disengage at least a portion of the area of engagement between said neutral members and said interior wall surface;

an intermediate member mounted on said supporting structure for movement relative thereto;

means responsive to movement of said nose member into said intermediate position for moving said intermediate member into engagement with said interior wall surface to reshape said skin assembly to vary the camber thereof; and

means responsive to movement of said nose member from said intermediate position toward said full camber position for disengaging at least some of the area of engagement between said intermediate member and said interior wall surface, said nose member and said tail member engaging and shaping said interior wall surface in said full camber position.

11. An airfoil as defined in claim 10 also including a spreader member secured to said supporting structure, said spreader member having a spreader surface engageable with said interior wall surface in said intermediate position and said full camber position to shape the portion of said skin assembly engaged thereby and means for keeping said flexible skin assembly taut when said nose member is in said positions.

12. A reversible camber airfoil comprising:

a supporting structure;

a flexible skin assembly having an interior wall surface forming an enclosure about said supporting structure;

a spreader member secured to said supporting structure including first and second opposed spreader surfaces, said first spreader surface being engageable with said interior wall surface to shape the portion of said flexible skin assembly engaged thereby;

forming means disposed substantially parallel to said spreader member and cooperating with said first spreader surface for engaging and shaping said flexible skin assembly into the form of an airfoil having a predetermined camber;

means for disengaging at least some of the area of engagement between said first spreader surface and said interior wall surface; and

means for reversing said predetermined camber to cause said interior wall surface to engage said second spreader surface and be shaped thereby.

13. A variable camber airfoil comprising:

a flexible skin assembly forming an enclosure and adapted to assume the contour of the airfoil, said skin assembly having an interior wall surface;

a supporting structure within said enclosure including a plurality of longitudinally extending spars;

a spreader secured to said spars and having a generally transverse spreader surface engageable with said interior wall surface to shape a portion of said skin assembly;

a rotatable nose member mounted to one of said spars and including a generally transversely extending nose surface, said nose member being rotatable between a first position in which said nose surface is at least partially out of engagement with said interior wall surface and a second position in which said nose surface engages and shapes a portion of said interior wall surface;

means for rotating said nose member between said first and said second positions; and

a tail member pivotally mounted to a second of said spars and to said nose member, said tail member having a tail surface engaging said interior wall surface to shape the latter and being rotatable about said second spar as said nose member moves between said first position and said second position to vary the camber of the airfoil.

14. A boat comprising:

a floatable structure;

a variable camber airfoil including a flexible skin assembly forming an enclosure and having an inner wall surface, forming means within said enclosure for engaging said interior wall surface to urge said flexible skin assembly into the shape of an airfoil, means for varying the camber of said airfoil, and first resilient means carried in said airfoil and engaging said flexible skin assembly urging said skin assembly away from said forming means for maintaining said skin assembly taut, said flexible skin assembly including second resilient means disposed within said enclosure urging said skin assembly toward said forming means providing substantially continuous engagement of said skin assembly and forming means, with said skin assembly slidable relative to said forming means; and

means for mounting said airfoil to said floatable structure for rotation relative thereto, said airfoil extending generally upwardly from said floatable structure.

15. A variable camber airfoil comprising:

a supporting structure;

a flexible skin assembly forming an enclosure having an interior wall surface about said supporting structure;

a rotatable nose member secured to said supporting structure and rotatable between a first position in which said nose member engages said inner wall to shape a portion of said flexible skin assembly and a second position;

a tail member pivotally secured to said supporting structure and to said nose member, said tail member and said nose member shaping said skin assembly to form an airfoil of a predetermined camber when said nose member is in said first position;

an intermediate member pivotally secured to said supporting structure and being engageable with said interior wall surface; and

means responsive to movement of said nose member toward said second position to urge said intermediate member into engagement with said interior wall surface to reshape said skin assembly to vary the camber of the airfoil, said means including a pin mounted on said supporting structure for movement relative thereto, a first slot in said tail member, and a second slot in said intermediate member, said first and second slots receiving said pin, movement of said tail member as said nose member moves to said sec-

ond position causing movement of said pin and hence movement of said intermediate member into engagement with said interior wall surface.

References Cited

UNITED STATES PATENTS

1,886,362	11/1932	Antoni	244—441
2,077,685	4/1937	Gerhardt	114—103

FOREIGN PATENTS

318,762	2/1920	Germany.
403,416	9/1924	Germany.
103,400	1/1917	Great Britain.
144,655	3/1954	Sweden.

MILTON BUCHLER, *Primary Examiner.*

T. M. BLIX, *Assistant Examiner.*