BEVERAGE DISPENSER INCLUDING MEANS TO PUNCTURE A PRESSURIZED GAS CARTRIDGE

Filed June 15, 1965 4 Sheets-Sheet 1

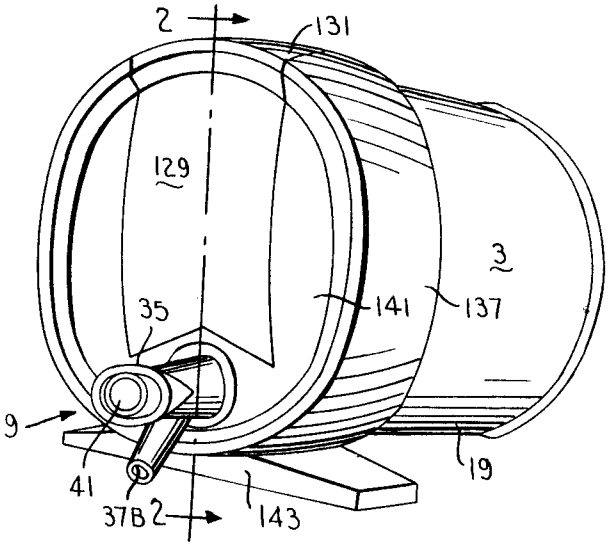

FIG.1.

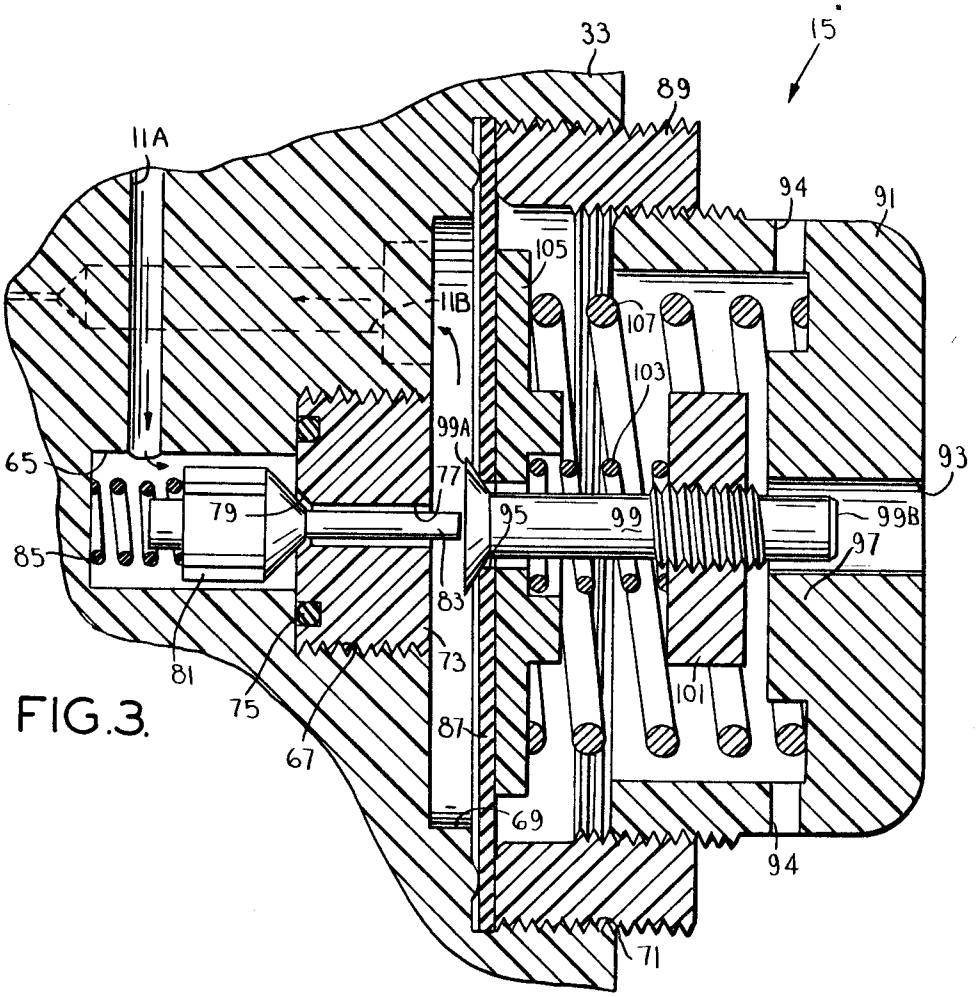

FIG.3.

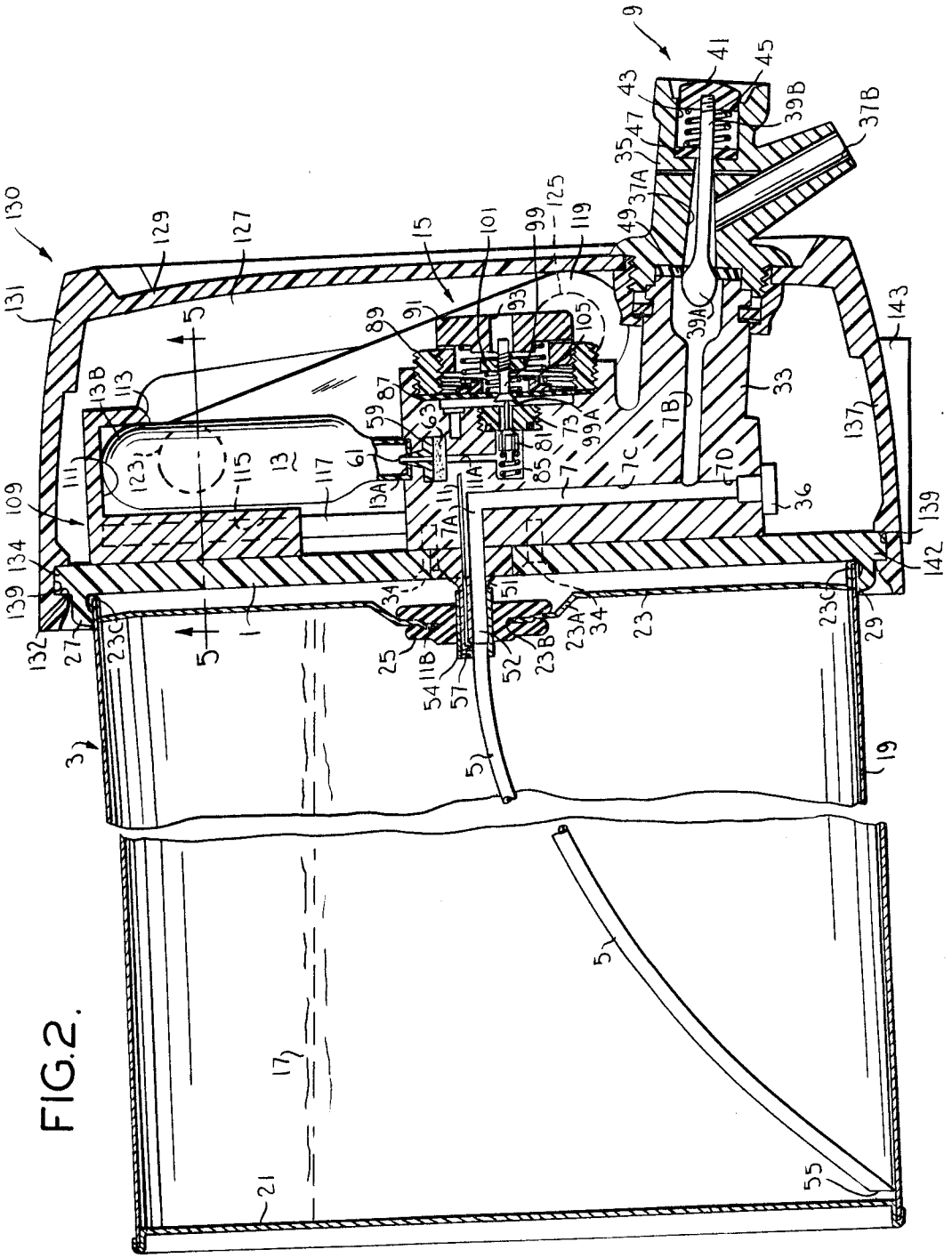

FIG. 2.

FIG.5.

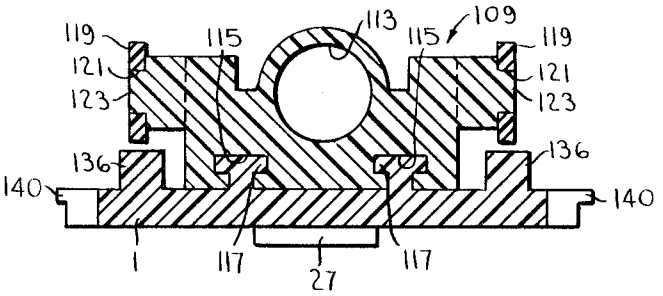

FIG.4.

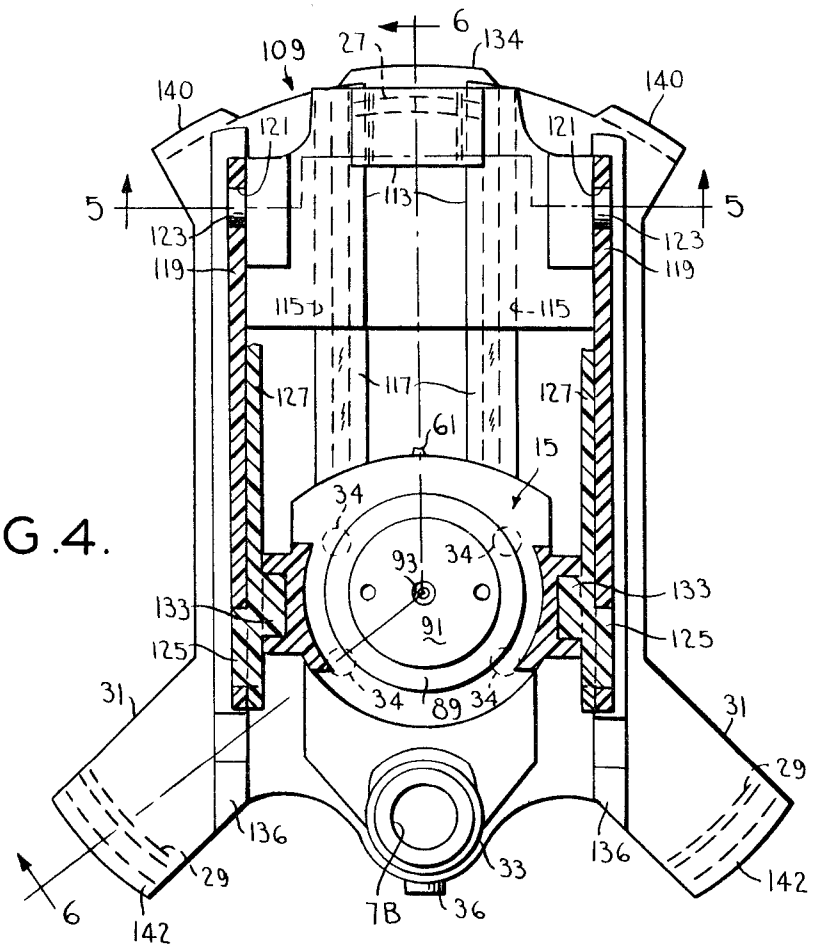

Albert H. de Boer,
Robert D. Franklin,
Malcolm B. Sturgis,
Inventors,
Koenig, Senniger, Powers and Leavitt,
Attorneys.

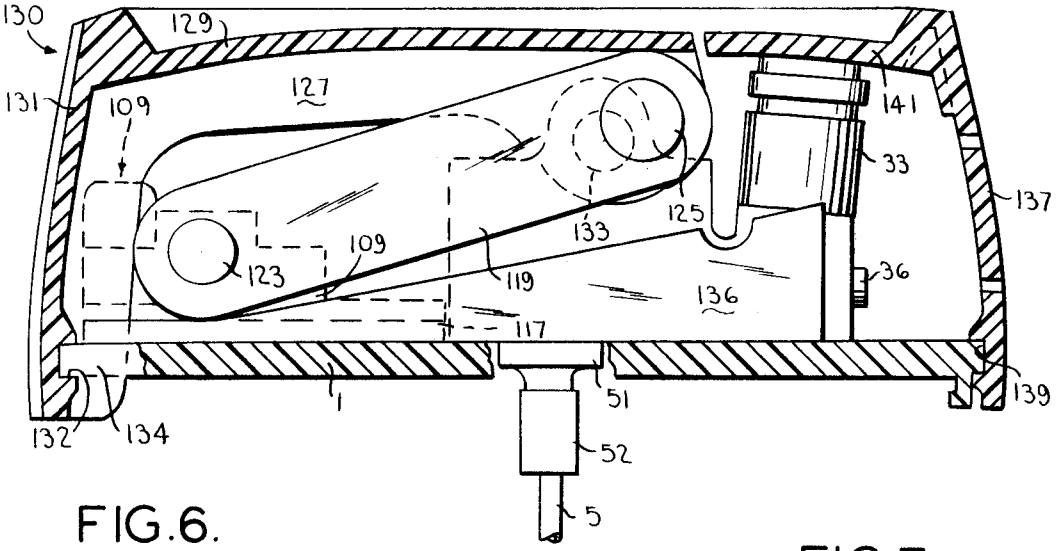

FIG.6.

FIG.7.

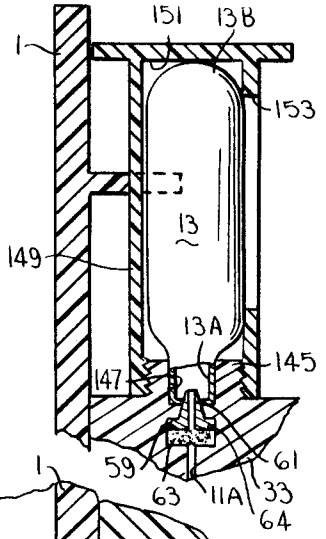

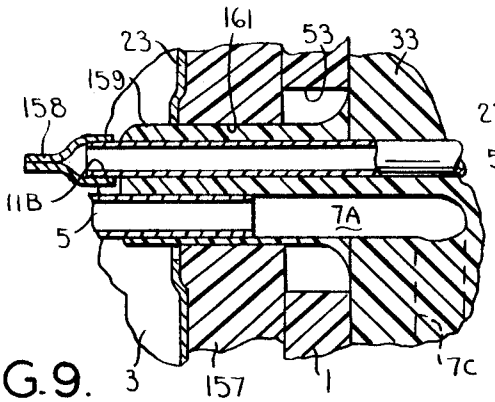

FIG.9.

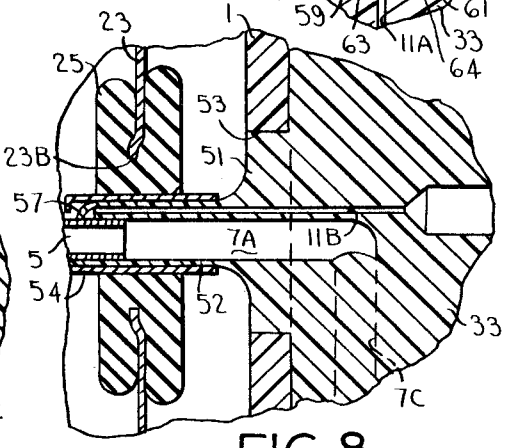

FIG.8.

United States Patent Office

3,325,053

Patented June 13, 1967

1

3,325,053

BEVERAGE DISPENSER INCLUDING MEANS TO PUNCTURE A PRESSURIZED GAS CARTRIDGE

Albert H. de Boer, Creve Coeur, Mo., Robert I. Franklin, Creve Coeur, Mo. (601 S. Taylor Ave., St. Louis, Mo. 63110), and Malcolm B. Sturgis, Clayton, Mo. (601 S. Taylor Ave., St. Louis, Mo. 63110); said De Boer assignor to said Franklin and said Sturgis

Filed June 15, 1965, Ser. No. 464,163
7 Claims. (Cl. 222—5)

This invention relates to beverage dispensers for attachment to containers of carbonated beverages to be dispensed under a pressurized gas such as carbon dioxide.

Among the several objects of the invention may be noted the provision of a beverage dispenser for use with a beverage container having an opening normally closed by a plug, the dispenser being adapted to pierce the plug as it is mounted on the container and to provide pressurized gas to the container for driving beverage from it; the provision of such a beverage dispenser attachable under seal with the container for removal of beverage; the provision of such a beverage dispenser capable of providing an uninterrupted flow of pressurized gas (such as carbon dioxide) to a beverage container over sustained time intervals without freezing of the gas in the gas line; the provision of a beverage dispenser of the class described constructed to accommodate a cartridge of pressurized gas and incorporating improved means for placing the cartridge in communication with a gas line in the dispenser; the provision of a dispenser of the class described adapted for connection to a throwaway or disposable beverage container; and the provision of an improved pressure regulator incorporating safety devices to eliminate buildup of pressure above a predetermined safe value in such containers. Other objects and features will be in part apparent and in part pointed out hereinafter.

The invention accordingly comprises the constructions hereinafter described, the scope of the invention being indicated in the following claims.

In the accompanying drawings, in which several of various possible embodiments of the invention are illustrated,

FIG. 1 is a perspective view of a beverage dispenser of the invention attached to a beverage container;

FIG. 2 is an enlarged ideal longitudinal section, partially broken away taken on line 2—2 of FIG. 1;

FIG. 3 is an enlarged detail showing a pressure regulator;

FIG. 4 is a right-end view of FIG. 2 with certain parts removed to show a mechanism for moving a gas cartridge;

FIG. 5 is a cross section taken along line 5—5 of FIG. 4;

FIG. 6 is a section taken along line 6—6 of FIG. 4;

FIG. 7 illustrates another embodiment of the mechanism for moving a gas cartridge;

FIGURE 8 is a detail section illustrating one manner in which the dispenser may be placed in communication with the interior of the container; and

FIG. 9 is a view showing a modification of the structure for effecting communication between the dispenser and the container.

Corresponding reference characters indicate corresponding parts throughout the several views of the drawings.

Referring to FIGS. 1 and 2 of the drawings, a dispenser of the inveniton comprises a base **1** adapted for attachment to a beverage container **3**. A hollow tube **5** is insertable into the container **3** and communicates via a passage **7** with a manual dispensing valve generally designated **9**. There is also a gas passage **11** for delivery of gas (such as carbon dioxide) from a cartridge **13** con-

2

taining the pressurized gas to the container **3**. A pressure regulator generally designated **15** communicates with gas passage **11** between its ends and is adapted to open and close passage **11** to the flow of gas for maintaining a predetermined pressure differential between the interior of container **3** and the surrounding atmosphere. When the dispenser is mounted on the container **3** and the container is pressurized, a beverage **17** (such as beer) in the container may be dispensed by opening valve **9** to permit flow of the beverage through tube **5**, passage **7** and valve **9**.

More specifically, the container **3** is preferably of the disposable type and it has a cylindrical wall **19** closed by heads **21** and **23**. Head **23** has a recessed center portion **23A** in which is hole **23B** normally closed by a resilient sealing plug **25** of rubber, plastic, or the like. The head **23** is fastened to the wall **19** by means of a bead or rim **23C** formed at the intersection of the end and body of the container. The base **1** of the dispenser is adapted to snap on the rim **23C**.

As shown in FIGS. 4 and 5, base **1** is provided with a finger desginated **27** shaped to snap over bead **23C** to engage the outer surface of tubular portion **19** of container **3**, as illustrated at the top of FIG. 2. At the opposite side of base **1** are two spaced feet **29** shown at the bottom of FIG. 4 which are attached to the main body portion of base **1** by legs **31**. Feet **29** are also shaped to snap over the rim **23C** for attaching the dispenser to container **3**.

Referring to FIG. 2, beverage passage **7** is in a core or block **33** attached to base **1** by screws **34**. Passage **7** has an inlet end portion **7A** joined to an outlet end portion **7B** by a cross portion **7C**. Passage **7** has a branch **7D** extending from portion **7C** to the outer surface of block **33**. Branch passage **7D** is closed by a safety plug **36** adapted to blow out at a predetermined pressure value, thereby preventing excessively high explosive pressures in container **3**.

A faucet **35** is attached to block **33**. It has a fluid passage through it comprising an inlet end **37A** communicating with portion **7B** of passage **7** and an outlet end **37B** through which beverage is passed from the dispenser. Valve **9** has a tear-drop shaped end portion **39A** positionable between passage portions **7B** and **37A**. The other end portion **39B** of valve **9** is attached to a push button **41** which moves into and out of a recess **43** in faucet **35**. A spring **45** in recess **43** reacts from a packing **47** against the inner surface of push button **41** for biasing the push button to its FIG. 2 position, thereby urging the tear-drop shaped end portion **39A** of the valve against a seating member **49**. This configuration or shape for the end portion **39A** of the valve permits even flow of beverages (such as beer) without excessive foaming or aerating of the liquid. By depressing push button **41** the valve end portion **39A** is moved away from its seat **49**, thereby permitting beverage to flow through passage portions **37A** and **37B** out of the dispenser.

The gas passage **11** has an inlet end portion **11A** adapted to receive gas under pressure and an outlet end portion **11B**, adapted to be placed in communication with container **3**. The gas passage is formed in the block **33**. Portions **7A** and **11B** of the passages are substantially parallel to each other as shown in FIGS. 2 and 8 and extend through a plastic boss **51** and nose piece **52** on block **33**. Boss **51** fits into a hole **53** in base **1**. There is a metal sleeve **54** surrounding nose piece **52**. Tube **5** is curved throughout substantially its entire length and it has one end positioned in passage **7A** (FIG. 8) and its other end is positionable adjacent the intersection of wall **19** and end **21** of container **3** (FIG. 2). There is a piercing cutter shape **55** on the inner end of tube **5**. This permits the tube **5** to be inserted in container **3** by piercing the plug with cutter **55** and then sliding tube **5** through the result-

ing hole. The sleeve **54** around nose **52** follows tube **5** through plug **25** as illustrated in FIG. 8. Sleeve **54** is somewhat larger in diameter than tube **5** and when it is in plug **25** the surface of the plug grips the periphery of the sleeve, thus sealing the connection between the sleeve and the plug so that no beverage is lost through the hole in the plug.

There is a check valve in passage **11** for preventing beverage **17** in container **3** from entering the gas passage from its outlet end **11B**. This check designated **57** in FIG. 8 is formed by cutting away the bottom part of passage **11B** at its outer end and turning down the resulting thin, flexible lip at the top of the passage to substantially close the end of the passage. The flexible lip of check **57** is forced open when the gas pressure in container **3** drops below the value of pressure in passage **11B**. The valve lip closes to prevent beverage from entering passage **11**.

Communication between a conventional CO_2 gas cartridge **13** and inlet end **11A** of the passage **11** is provided by a perforated fitting **59** (FIG. 7) which has a sharp tapered end **61** adapted to pierce the end of cartridge **13** so that the gas in cartridge **13** may flow through the fitting for delivery to passage **11A**. The lower end **13A** of cartridge **13** is a soft metal and there is a metal-to-metal seal between it and the tapered end of fitting **59**. A filter **63** prevents closing of passage **11** by any foreign particles carried with the compressed gas. A moving seal **64** is provided between members **59**, **33** and **63**. This prevents leakage to atmosphere and pressure-loads the member **59** against cartridge **13**.

Referring now to FIG. 3, this shows the block **33** bored to form a hole **65** and is counterbored as shown at **67**, **69** and **71**. Hole **65** intersects the inlet end **11A** of the gas supply passage. A regulator structure **15** is mounted within the hole and the counterbored areas for regulating passage of gas from end **11A** to end **11B** of the gas passage. The counter-bore area **69** communicates with end **11B** of the gas passage. A fitting **73** threaded in the counterbored opening **67** is sealed to block **33** by an O-ring **75**. Fitting **73** has a hole **77** through it and a tapered seat **79** which flares outwardly from one end of hole **77**. A valve **81** is movable in hole **65** into and out of engagement with seat **79** for closing and opening communication between gas passage end portions **11A** and **11B**. Valve **81** has a stem **83** which loosely slides with clearance in hole **77**. A spring **85** reacts from the bottom of hole **65** against an end of valve **81** for biasing the valve against its seat.

There is a flexible diaphragm **87** stretched across counterbored opening **71** and sealed against block **33** by a fitting **89** threaded in opening **71**. Diaphragm **87** can flex into the counterbored area **69** toward the check valve **81** and away from valve **81** and within the annulus of fitting **29**. A cover **91** threaded into fitting **89** is adjustable toward and away from diaphragm **87**. Cover **91** has a port or opening **93** at its center which is axially aligned with an opening **95** in the center of diaphragm **87**. There are a plurality of auxiliary ports **94** in cover **91** spaced from port **93** for venting fluid from cover **91**.

On the inner surface of cover **91** there is an annular abutment or shoulder **97** coaxial with port **93**. A bolt **99** has a head **99A** on the gas passage side of diaphragm **87**, that is, the left side of diaphragm **87**. Shank **99B** of bolt **99** projects through hole **95** in diaphragm **87** and its end is adpated for loose sliding movement within shoulder **97** and the port **93** in cover **91**. Adjustable along bolt shank **99B** is a nut **101** engageable with abutment **97** for holding bolt **99** against further movement to the right as viewed in FIG. 3.

A spring **103** reacts from the left surface of nut **101** against the inner portion of a diaphragm backing plate **105** for biasing the boundary of hole **95** in diaphragm **87** and bolt head **99A** into engagement for sealing the connection between the bolt head and the diaphragm. Another spring **107** reacts from the inner surface of cover **91** against an outer portion of diaphragm backing plate **105** for biasing the backing plate and diaphragm **87** to the left as viewed in FIG. 3. When nut **101** is abutting the shoulder **97** and fluid pressure in the counterbore **69** increases, spring **107** is compressed by the gas pressure on diaphragm **87** to unseat diaphragm **87** from bolt head **99A**, thereby permitting gas to escape from the counterbore area **69** through hole **95**, around the bolt and out ports **94** in cover **91**, thus exhausting gas from the area downstream of valve **81** to the atmosphere. This structure comprises a safety valve which prevents excessive pressure from being built up in container **3** relative to the atmospheric pressure. Thus by adjusting cap **91** and nut **101**, the relief action may be made to occur outside of the regulating pressure. Thus the regulator has means for automatically providing communication between the gas passage and the atmosphere on a second predetermined pressure differential between the gas passage downstream of the regulator valve and the atmosphere.

When diaphragm **87** flexes to the left under the influence of spring **107** as a result of pressure differential in the gas passage end **11B** relative to the atmosphere, bolt head **99A** engages stem **83** of valve **81**, thus unseating valve **81** so that additional gas under pressure can pass from end **11A** to end **11B** of the gas passage, thus replenishing the gas supply in container **3**.

Thus regulator **15** performs two functions. It maintains a given pressure in container **3** relative to the atmosphere and it functions as an automatic relief or valve to limit the maximum pressure delivered to container **3** relative to the atmospheric pressure. The desired pressure differential and relief presures can be obtained by adjustment of cover **91** and the nut **101** on bolt **99**. A pressure of approximately **14** p.s.i. in container **3** has been found satisfactory when beer is being dispensed, and pressures of **50–76** p.s.i. may be required when carbonated soft drinks are being dispensed. Regulator **15** may be used in other applications where pressure regulation coupled with limitation of maximum pressure is desired.

The gas cartridge **13** is moved toward and held on fitting **59** by a sliding carrier generally designated **109** in FIGS. 2, 4 and 5. Carrier **109** includes a recess or opening **111** for cartridge **13** and it has a door or opening **113** at its front through which the cartridge is inserted and removed. Cartridge **13** is loaded in carrier **109** by tilting the cartridge and first inserting its rounded end **13B** into the opening **111** and then swinging the remainder of the cartridge into the carrier through door **113**. Carrier **109** is movable between a first position where the gas cartridge **13** can be loaded into the carrier and a second position (shown in FIG. 2) where the outlet end of cartridge **13** is pierced by the tapered end **61** of fitting **59** for placing the cartridge in communication with the gas passage **11**. For this purpose (FIG. 5) carrier **109** has generally T-shaped recesses **115** on its back surface which receive T-shaped rails **117** projecting from the surface of base **1** opposite from container **3**. This connection guides carrier **109** for movement between its two positions, thereby accurately directing cartridge end **13A** into engagement with the end **61** of fitting **59**.

Carrier **109** is moved between its first and second positions by twin link members **119** which have holes **121** through which studs **123** on carrier **109** project. In a similar manner the links **119** are connected to pivots or studs **125** on one end portion of two generally parallel lever arms **127**. Lever arms **127** are in the form of ribs on an L-shaped operating lever **130** formed by walls **129** and **131**. The wall **131** has a recess **132** which snaps onto a ridge **134** on base **1**. On the inner surface of arms **127** there are studs or pivots **133** in recesses **135** in the sides of block **33**. The walls **129**, **131** and lever arms **127** comprise the lever **130** which pivots about stud **133** and recesses **135**. The axis of each pivot **133** is displaced from the axis of the pivots **125**.

FIGS. 2 and 6 show the carrier **109** at its lower position where cartridge **13** is pierced by fitting **59**. In order to elevate the carrier **109** to insert or remove a cartridge **13**, the wall **131** of level **130** joining lever arms **127** at the top of the dispenser is disengaged from ridge **134** of base **1**. The lever **130** is then swung in a clockwise direction about an axis through the center of pivots **133**. Pivots **125** to which links **119** are attached will be swung in a clockwise direction about pivots **133**, thereby moving links **119** to the left as viewed in FIG. 6 and up as viewed in FIGS. 2 and 4. This moves the carrier **109** away from fitting **59** in core **33**, thereby permitting removal of cartridge **13** through door or window **113**. After a new cartridge **13** has been inserted in carrier **109**, lever **130** is swung counterclockwise about pivot **133**, thus swinging pivot **125** about pivot **133** to move links **119** which in turn forces carrier **109** and the cartridge **13** it is carrying toward the fitting **59** for piercing the cartridge. Reinforcing ribs **136** (FIG. 4) on base **1** prevent flexing of base **1** when a cartridge is being pierced.

As best seen in FIG. 6, the arrangement of pivots **123**, **125** and **133** is such that when lever **130** is in its closed position as shown in FIG. 6 the mechanism is locked due to an overcenter positioning of pivot **125**, that is, the center of pivot **125** has moved past a line passing through the centers of pivots **123** and **133**.

The mechanism of the dispenser is enclosed by a cover or housing which comprises a substantially annular wall **137** having a recess **139** which receives ridges **140** and **142** on base **1**, thereby fixing the cover onto the base. Aattached to wall **137** is a front wall **141** through which faucet **35** projects. The walls **137** and **141** have openings which accommodate the walls **131** and **129** of the lever **130**. When walls **129** and **131** are in the position shown in FIG. 1, the front and outer walls of the dispenser are substantially smooth. Housing wall **137** is supported on a pedestal **143**.

The housing **137**, **141** and the hinge parts **127**, **129**, **131** (as well as other parts of the dispenser) can be made from plastics such as polyethylene, polypropylene, etc.

Operation of the dispenser is as follows:

The dispenser is shown in connection with a container or can **3** containing beverage **17** and having opening **23B** closed by the plug **25**. The dispenser is mounted on the container **3** by placing the cutting end **55** of tube **5** against plug **25** and forcing the tube through the plug. Fingers **27** of base **1** are placed over bead **23C** and feet **29** are snapped onto the bead thereby affixing the dispenser to the container. Tube **5** is then fully received within the container with its end **55** at the bottom of the container, and the end of nose **52** is also received in the container **3**. The end of wall **131** is then lifted to disengage the ridge **134** from base **1** and lever **130** is swung to its position about pivots **133**, thus swinging pivots **125** in a clockwise direction (as viewed in FIG. 6) about pivots **133**, thereby moving links **119** and carrier **109** so that the carrier is moved away from fitting **59**. The walls **131** and **129** forming lever **130** form an openable and closable door. When open the door permits removal of an expended cartridge **13** and insertion of a new cartridge containing pressurized gas into the carrier through the carrier door **113**. Walls **129** and **131** constituting lever **130** are then swung back to the latched position shown in FIGS. 1, 2 and 6, thus pulling links **119** for moving carrier **109** and causing cartridge **13** to be pierced by end **61** of fitting **59**. The cartridge **13** is prevented from drifting back by the overcenter locking mechanism including links **119** and pivots **123**, **125** and **133**, and their relation relative to each other.

As soon as cartridge **13** is pierced, gas under pressure can flow into the gas passage inlet end **11A**. When the gas pressure in container **3** is less than the desired value (as determined by the setting of regulator **15**), then valve **81** of the regulator opens due to flexing of diaphragm **87** to the left in FIGS. 2 and 3, and gas under pressure flows from passage inlet end **11A** around valve **81** and into the passage outlet end **11B** as illustrated by the arrows in FIG. 3. When the pressure in container **3** reaches the desired value relative to atmospheric pressure, diaphragm **87** moves to the right to its FIG. 3 unflexed position, thereby disengaging bolt head **99A** from stem **83** of valve **81** and permitting spring **85** to bias valve **81** against its seat **79** for closing the valve. Should check valve **81** fail to close for any reason, pressure continues to build up in the counterbore area immediately downstream of valve **81**, thus causing diaphragm **87** to continue to move to the right under the influence of this gas pressure differential until nut **101** strikes abutment **97**. Then any additional increase in gas pressure downstream of valve **81** unseats diaphragm **87** from bolt head **99A**, thereby permitting discharge of gas from the counterbore area **69** through hole **95** in the diaphragm and then through ports **94** in cover **91** to the atmosphere. When the pressure decreases to the desired pressure in container **3**, the diaphragm returns to its FIG. 3 unflexed position where diaphragm **87** again seats against bolt head **99A** due to the biasing force of spring **103** and gas pressure loading.

With container **3** properly pressurized, beverage **17** may be removed from the container by moving push button **41** against spring **45**, thus unseating the valve end **39A** from its seat **49**. Due to the pressure in container **3** relative to the atmosphere, beverage **17** will pass through tube **5** and beverage passage **7** to the faucet, and then through passages **37A** and **37B** and out of the faucet. When push button **41** is released spring **45** returns it to the FIG. 2 position and valve **39A** closes against its seat **49**.

If for any reason the regulator fails to prevent buildup of pressures in container **3**, then explosion of the container is prevented by blow-out plug **36** which is adapted to be blown out of branch passage **7D** at a predetermined pressure value beneath the maximum pressure container **3** is constructed to withstand, thus permitting discharge of beverage **17** from branch **7D** and reduction of pressure in container **3**.

A modified form of a carrier for cartridge **13** is illustrated in FIG. 7 of the drawings and comprises a threaded nipple **145** having a central opening **147** for guiding end **13A** of cartridge **13** into engagement with fitting **59**. The modified carrier is designated **149** and has threads on its lower end cooperating with the threads on nipple **145** for moving the carrier and thus cartridge **13** toward and away from fitting **59**. Carrier **149** has a recess **151** which receives cartridge **13**, and the cartridge **13** is inserted and removed through a window **153**. In this modification neither the lever **130** nor the linkage **119** and carrier **109** are necessary and are omitted. In such event the walls **129** and **131** may be made an integral part of the walls **137**, **141**.

Another modification of the invention is illustrated in FIG. 9 of the drawings where the plug **25** of FIG. 8, which is furnished with container **3** for closing the opening **23B**, is removed prior to fixing the dispenser on the container. The sealing obtained in the previously described embodiment by use of plug **25** is now obtained by a separate seal or grommet **157**. Grommet **157** is positioned between base **1** and wall **23** of container **3** and surrounds opening **23B** in wall **23** and opening **53** in base **1**. Seal **157** is tightly pressed against the container and the base by engagement between the fingers **27** and feet **29** of the base and container bead **23C**. A boss or nose **159** projects through a central opening **161** in seal **157** into container **3**. Tube **5** is received in the inlet end **7A** of the beverage passage in the manner previously described. However, the outlet end **11B** of the gas passage is substantially larger than the gas passage for the previously described embodiment, such being possible due to the total removal of the plug **25** and the fact that nose **159** is substantially as large as the openings **23B** in the con-

tainer. A suitable flexible check valve, such as shown at **158**, is provided in the outlet end **11B** of the gas passage to prevent beverage from flowing into the regulator. Any other suitable check valve at this point can be used.

One of the advantages of the structure shown in FIG. 9 is that the size throughout the gas passage **11** can be maintained substantially constant, thus preventing freezing of the gas at venturis resulting from changes in size of a passage. Such freezing is unlikely even with the structure shown in FIG. 8 unless there is a long uninterrupted period of beverage dispensing which requires flow of greater than normal quantities of gas through the passage **11**.

The dispensers of the invention can be used with containers of various sizes, including gallon size containers. The safety features of the dispensers make it particularly suitable for home refrigerator use where the need for automatic safety devices are especially important. Beer, carbonated soft drinks and other beverages may be handled by the dispenser with appropriate adjustments being made on the regulator to obtain the pressure in the container required for dispensing the beverage and for maintaining the desired gas concentration in beverages that are carbonated or contain other gases. Container **3** is preferably of the type (often called a tin can) which is filled and sealed by a brewer or carbonated drink manufacturer and may be discarded by the purchaser when emptied. It will be understood, however, that the device may be applied to a returnable container.

In view of the above, it will be seen that the several objects of the invention are achieved and other advantageous results attained.

As various changes could be made in the above constructions without departing from the scope of the invention, it is intended that all matter contained in the above description or shown in the accompanying drawings shall be interpreted as illustrative and not in a limiting sense.

What is claimed is:

1. A beverage dispenser comprising a member adapted for attachment to a beverage container, a dispensing valve, a tube having an end portion positionable in the container, a beverage passage connecting the valve and the tube, a gas passage having an end communicating with the container, a check valve closing the gas passage to the flow of fluid from the container, receiving means connected with the gas passage for puncturing a cartridge which contains pressurized gas, a pressure regulator communicating with the gas passage and adapted to open and close said gas passage to the flow of gas in response to the gas pressure in the container relative to atmospheric pressure, whereby a predetermined pressure differential can be maintained between the gas pressure in the container and atmospheric pressure, a carrier for a gas cartridge mounted on said member for movement between a first position in which a gas cartridge can be loaded into the carrier and a second position in which the cartridge is engaged with said receiving means to be punctured thereby and placed in communication with the gas passage means for moving the carrier between its first and second positions comprising a lever arm movable about a pivot at one of its end portions, and link means attached to said carrier and attached to said lever arm whereby movement of said lever arm about said pivot causes movement of said link and said carrier.

2. A dispenser as set forth in claim **1** wherein said regulator comprises a check valve, means biasing said regulator valve to a closed position, and means for automatically opening said valve in response to a change in said pressure differential resulting from a drop in gas pressure in said container.

3. A dispenser as set forth in claim **1** wherein said regulator includes a normally closed safety valve adapted to open at a given pressure differential caused by a gas pressure in the passage downstream with respect to the regulator check valve which is high relative to atmospheric pressure, for venting gas from the gas passage to prevent excessively high gas pressure in the container relative to atmospheric pressure.

4. A dispenser as set forth in claim **1** wherein there is a cutting edge on the end of the tube remote from the beverage passage whereby the tube is adapted for piercing a plug in a beverage container when attaching the dispenser to the container.

5. A beverage dispenser comprising a base adapted for attachment to a beverage container, a dispensing valve, a tube having an end portion positionable in the container, a passage for beverage connecting the valve and the tube, a gas passage having an end communicating with the container, a check valve closing the gas passage to the flow of beverage into the passage from the container, a fitting connected with the gas passage having a tapered end adapted for piercing a cartridge which contains pressurized gas for placing the cartridge in communication with the gas passage, a pressure regulator communicating with the gas passage and having a valve for opening and closing said passage to the flow of gas in response to the gas pressure in the container relative to atmospheric pressure whereby a predetermined pressure differential can be maintained between the gas pressure in the container and atmospheric pressure, said regulator having means for automatically providing communication between the gas passage and the atmosphere on a second predetermined pressure differential between the gas passage downstream of the regulator valve and the atmosphere, a carrier for a gas cartridge mounted on said base for movement between a first position in which a gas cartridge can be loaded into the carrier and a second position in which the cartridge is pierced by the tapered end of the fitting for placing the cartridge in communication with the gas passage, means for moving the carrier between its first and second positions, the beverage and gas passages being in a block, and the carrier moving means comprising an arm pivoted on the block and linked to the carrier whereby movement of the arm causes movement of the carrier, the arm being linked to the carrier by a linkage member pivoted to the carrier and pivoted to the arm adjacent the connection between the arm and the block, and the connections between the link member, carrier and arm being arranged to provide an overcenter locking device for holding the parts against inadvertent movement from a position where the carrier is in its second position.

6. A beverage dispenser comprising a member adapted for attachment to a beverage container, a dispensing valve, a passage for providing beverage to the valve, a gas passage having an end positionable in communication with the container, receiving means connected to the gas passage for puncturing a cartridge which contains pressurized gas, a carrier for a gas cartridge mounted on said member for movement between a first position in which a gas cartridge can be loaded into the carrier and a second position in which the cartridge is engaged with said receiving means to be punctured thereby and placed in communication with the gas passage, means for moving the carrier between its first and second positions comprising a lever arm moved about a pivot at one of its end portions, and link means attached to said carrier and lever arm whereby movement of said lever arm about said pivot causes movement of the link and said carrier.

7. A dispenser as set forth in claim **6** wherein the connections between the link means and the carrier and between the link means and the lever arm are arranged to provide an overcenter locking device for holding the parts against inadvertent movement when the carrier is in its second position.

References Cited

UNITED STATES PATENTS

469,112	2/1892	Atkinson	222—209 X
1,262,077	4/1918	Maurer	222—61

(Other references on following page)

UNITED STATES PATENTS

1,733,310	10/1929	Manley	222—440
2,154,393	4/1939	Bates	222—397
2,158,347	5/1939	Yirava	222—82 X
2,212,626	8/1940	Thomas	137—116.5
2,301,724	11/1942	Vischer.	
2,331,834	12/1943	Harr	222—397 X
2,400,955	5/1946	Samel	222—464 X
2,492,309	12/1949	Miller	222—82 X
2,860,820	11/1958	Falligant	222—82

2,984,252	5/1961	Bryant	137—505.42
3,018,776	1/1962	Saitta et al.	222—5 X
3,039,661	6/1962	Wentz et al.	222—400.7 X
3,092,291	6/1963	Franck	222—89 X
3,186,599	6/1965	Levinson et al.	222—82
3,231,154	1/1966	Johnston	222—400.7

FOREIGN PATENTS

951,790	10/1956	Germany.

WALTER SOBIN, *Primary Examiner.*