PISTOL GRIP PUMP-TYPE DISPENSER

Filed Dec. 28, 1965 3 Sheets-Sheet 1

Fig. 1.

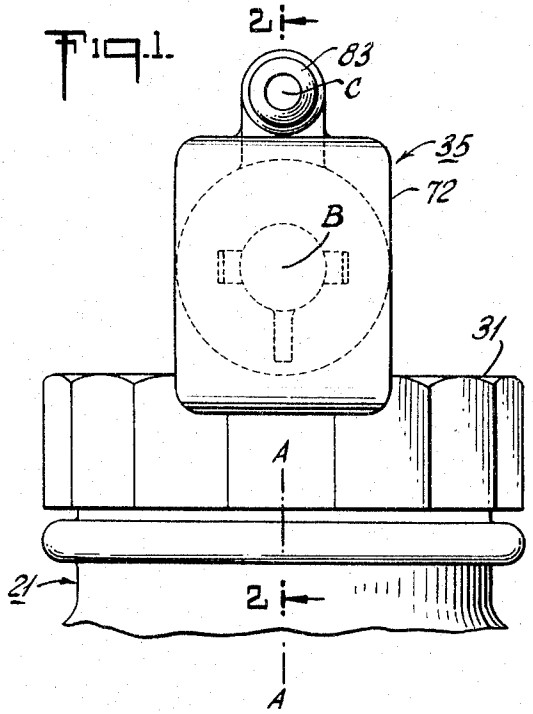

Fig. 7.

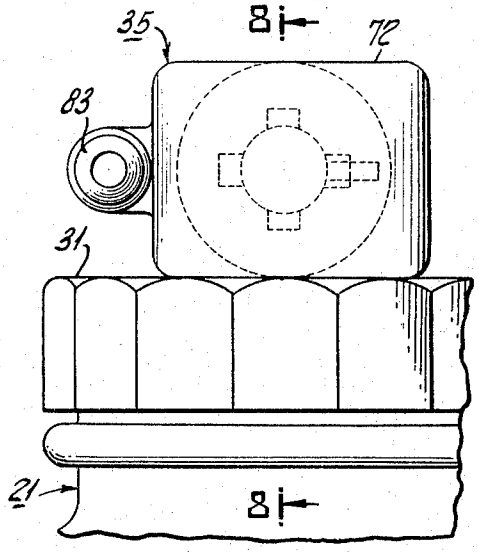

Fig. 8.

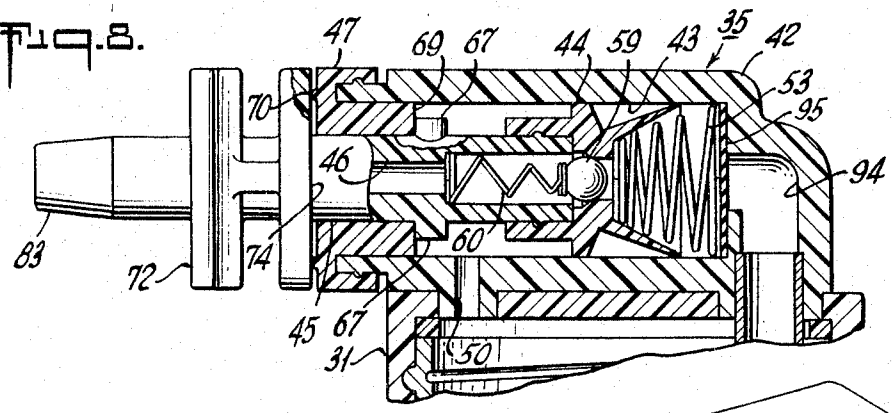

Fig. 6.

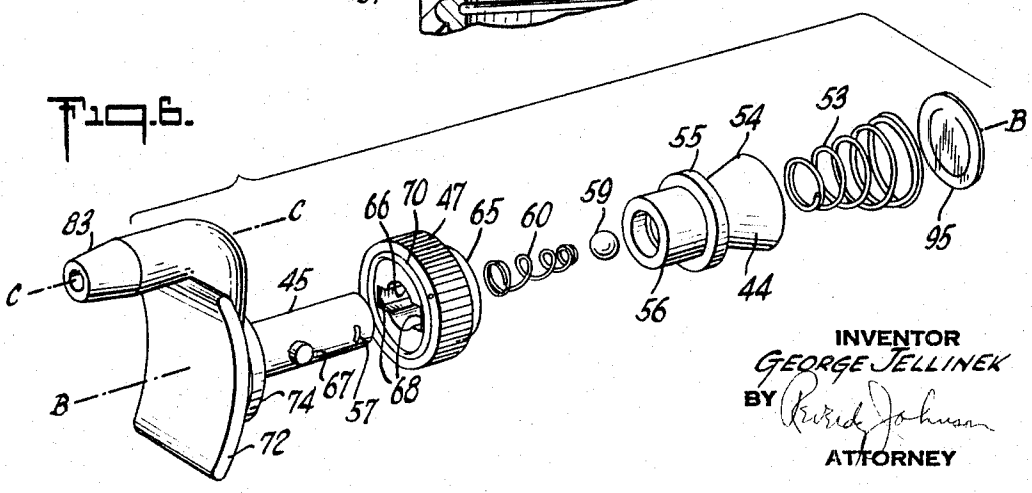

INVENTOR
GEORGE JELLINEK
BY Richard Johnson
ATTORNEY

PISTOL GRIP PUMP-TYPE DISPENSER

Filed Dec. 28, 1965 3 Sheets-Sheet 2

Fig. 2.

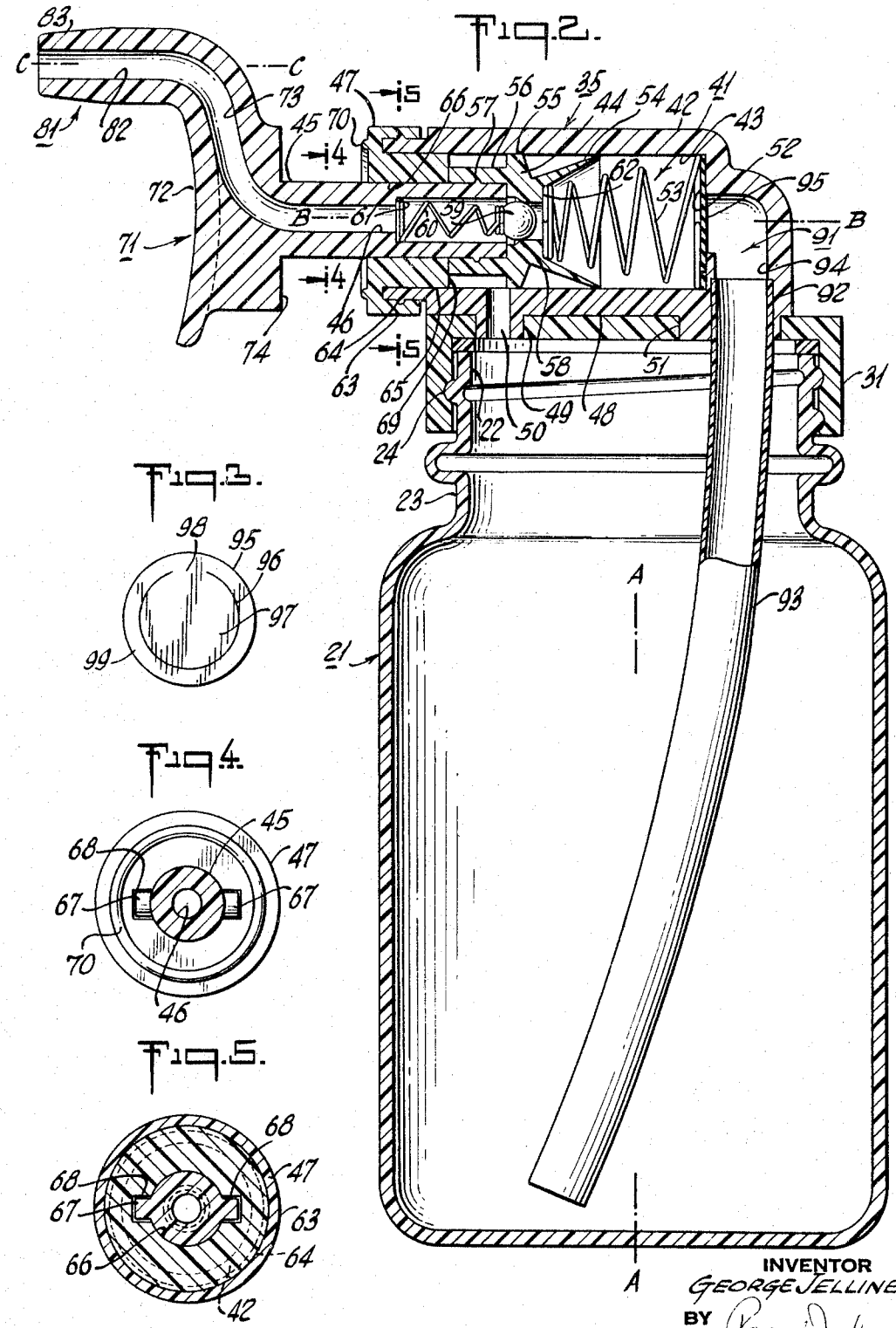

Fig. 3.

Fig. 4.

Fig. 5.

INVENTOR
GEORGE JELLINEK
BY Robert D. Johnson
ATTORNEY

PISTOL GRIP PUMP-TYPE DISPENSER

Filed Dec. 28, 1965 3 Sheets-Sheet 3

Fig. 9.

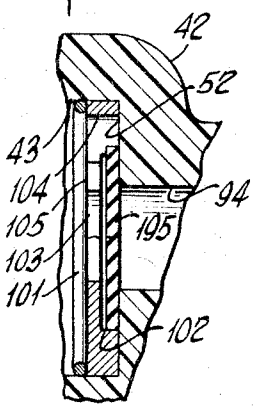

Fig. 10.

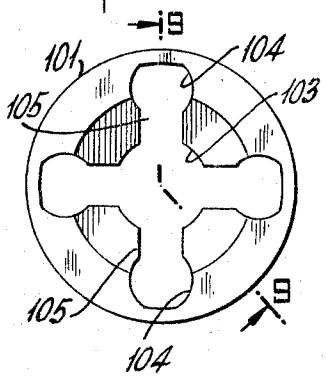

Fig. 11.

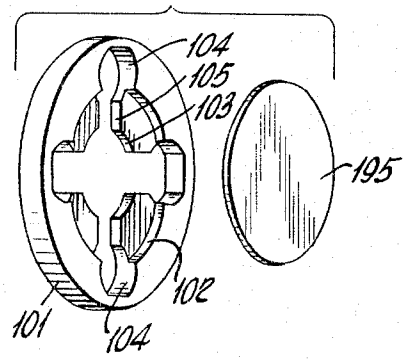

Fig. 13.

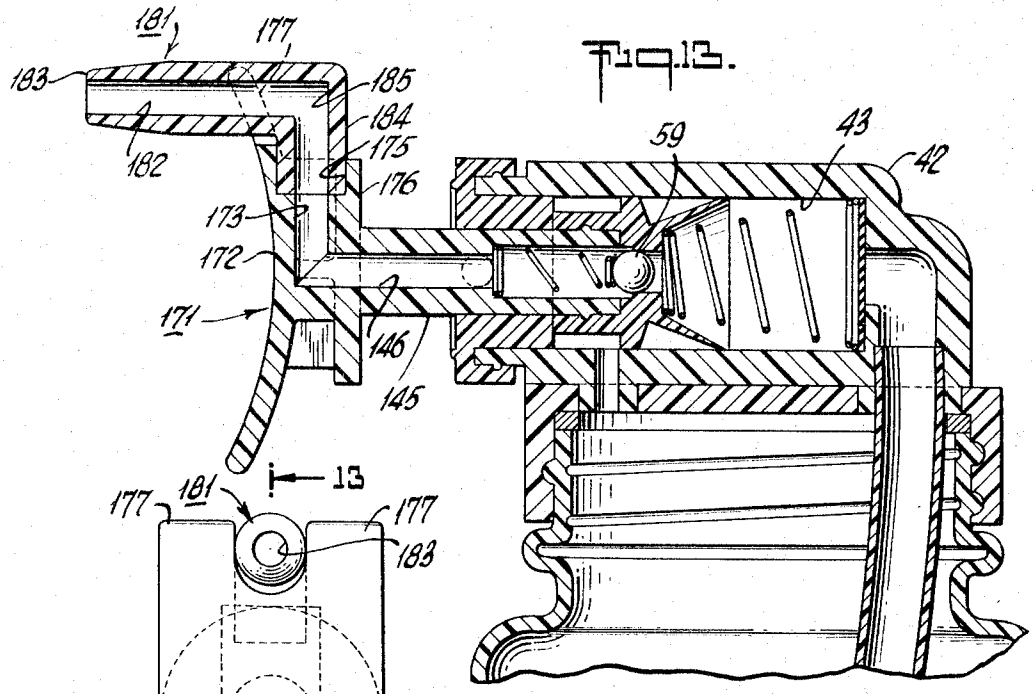

Fig. 12.

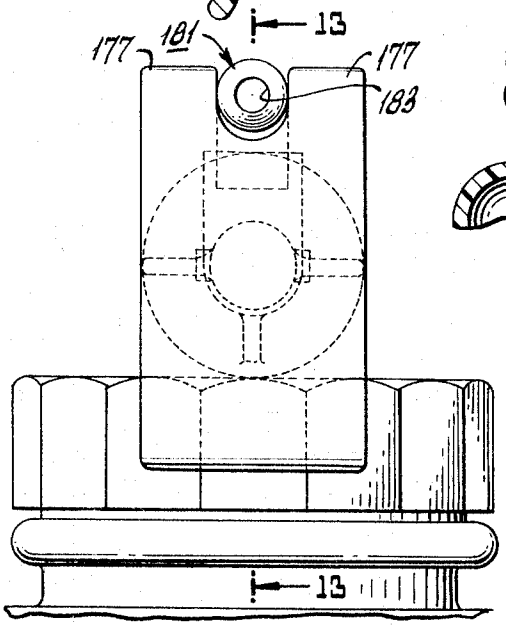

INVENTOR
GEORGE JELLINEK
BY Revere Johnson
ATTORNEY

United States Patent Office

3,321,111

Patented May 23, 1967

1

3,321,111
PISTOL GRIP PUMP-TYPE DISPENSER

George Jellinek, Plainfield, N.J., assignor to Merck & Co., Inc., Rahway, N.J., a corporation of New Jersey

Filed Dec. 28, 1965, Ser. No. 516,933
4 Claims. (Cl. 222—321)

This invention relates to a manually operated pump-type dispenser for a liquid contained within a container.

The object of this invention is to provide such a dispenser:

(a) that has the container in the form of a bottle;
(b) that has the bottle and the actuating mechanism grasped by the hand in a pistol-like grip;
(c) that is actuated by squeezing the first finger of the hand, similarly as when squeezing the trigger of a pistol;
(d) that is simple in construction so that it can be made inexpensively of synthetic plastic material;
(e) that is not difficult to operate and does not tend to jam when operated;
(f) that is easy to aim at a single point, and will direct to that point all the material ejected by one squeeze of the actuating mechanism;
(g) that will discharge a uniform quantity of liquid with each squeeze of the actuating mechanism, within a small tolerance range, and
(h) that will operate satisfactorily with a liquid containing in appreciable amount of a solid suspended therein, even after a substantial amount of time elapses between one series of uses and a second series of uses.

Other objects, and the features of the invention, will become apparent as the description proceeds.

In the drawings:

FIGURE 1 is an elevational view of the dispenser, looking endwise at its discharge element and finger piece;

FIGURE 2 is a sectional view of the dispenser and container taken along the line 2—2 of FIGURE 1;

FIGURE 3 is an elevational view of the valve disc at the intake end of the pump of the dispenser;

FIGURE 4 is a sectional view of the dispenser taken along the line 4—4 of FIGURE 2;

FIGURE 5 is a sectional view of the dispenser taken along the line 5—5 of FIGURE 2;

FIGURE 6 is an exploded view of the discharge element, finger piece, washer, piston and associated parts of the dispenser;

FIGURE 7 is a view similar to FIGURE 1 with the finger piece fully depressed and rotated 90° to lock the parts in the position shown;

FIGURE 8 is a sectional view taken along the line 8—8 of FIGURE 7, showing the parts in the position conforming to that shown in FIGURE 7;

FIGURE 9 is a substantially vertical section of the intake end of the pump with a modified type of intake valve thereat, the section being taken along the line 9—9 of FIGURE 10;

FIGURE 10 is a view of one part of such modified intake valve shown in FIGURE 9;

FIGURE 11 is an exploded view of the modified intake valve shown in FIGURES 9 and 10;

FIGURE 12 is a view similar to FIGURE 1 showing a modified form of the finger piece and discharge element; and

FIGURE 13 is a view similar to FIGURE 2, taken along the lines 13—13 of FIGURE 12.

Referring to the embodiment of the invention shown in FIGURES 1–8, the liquid to be dispensed is contained within the container generally indicated by the reference number 21. This container is in the form of a cylindrical

2

bottle having a wide mouth opening 22 at the upper end of the container neck 23 (see FIGURE 2). The container 21 is conveniently formed of a suitable synthetic plastic which is compatible with the liquid and the ingredients dissolved or suspended therein. The longitudinal axis of this cylindrical container 21 is indicated in FIGURES 1 and 2 by the dot-and-dash line A—A. The neck 23 of the container has screw threads 24 formed therein (see FIGURE 2).

A cap 31 is fastened to the top of the container 21 by being screwed onto the threads 24, and thus serves as the closure for the container. In addition, this cap 31 also serves as the base and support for the dispenser, generally indicated by the reference number 35.

This dispenser 35 consists of a pump generally indicated by the reference number 41, a finger piece generally indicated by the reference number 71, a discharge element generally indicated by the reference number 81, and an intake element generally designated by the reference number 91.

The pump 41 is of the reciprocating type, having a chamber 42 with a cylindrical bore 43. In this bore a piston 44, closely fitting the bore 43, moves in the direction of the longitudinal axis of the bore, this axis being indicated in FIGURE 2 by the dot-and-dash line B—B and being indicated in FIGURE 1 by the dot B. The piston 44 is secured to a piston rod 45 which is hollow and thus has a bore 46, the axis of this piston rod coinciding with the longitudinal axis B—B of the bore of the piston chamber. This axis B—B is at right angles to the axis A—A of the container 21. One end of the pump chamber 42 is open as the chamber is constructed, but closed by a closure ring 46, through the center of which the piston rod 45 passes.

Positioned across the extending end of piston rod 45, and secured thereto, is the finger piece 71. This has a finger pressure area 72, preferably with an arcuate surface, in the form of part of the wall of an imaginary cylinder whose axis is in the same horizontal plane as the axis B—B of the piston rod 45 but at right angles to that axis. Hence, when the container 21 is grasped by the hand about its cylindrical wall, the end of the first finger of the hand is readily and comfortably positioned against the finger pressure area 72, in pistol grip fashion. By pressing the first finger inward, the finger piece 71 is thus moved inwardly toward the pump chamber 42, and this movement carries with it the piston rod 45 and the piston 44. Preferably the center of finger pressure on finger piece 71 is directly in line with the axis B—B of the piston rod 45 and pump chamber 42, as shown in FIGURES 1, 2 and 6 of the drawings.

Finger piece 71 has a bore 73 behind it that connects at one end with the bore 46 of the piston rod 45, and connects at the other end with the bore 82 of the discharge element 81.

The axis of the bore 82 of the discharge element 81 is indicated by the dot-and-dash line C—C in FIGURES 2 and 6, (and by the dot C in FIGURE 1), and is parallel to, and positioned above the axis B—B. The exit end of bore 82 is illustrated as a nozzle 83. This directs the discharged liquid, as a spurt of liquid, in the direction of axis C—C. This direction, as previously stated, is parallel to the axis B—B of the pump chamber 42 and piston rod 45. Hence, when the container is held stationary and the pump 41 is operated by pressing the finger piece 71 inwardly to effect the discharge of liquid by the dispenser 35, all of the discharged spurt of liquid is aimed at one point or at a small circular area centralized about a single point.

The following are additional details of the construction and operation of this dispenser.

The exterior of the pump chamber **42** has a flat bottom surface **48** which engages, and is adhesively secured, to the top surface of cap **31**. Surface **48** also has two downwardly projecting lugs **49** and **51** that fit into suitable holes in the cap **31**. Lug **49** has a bore **50** therein that communicates with the floor of bore **43** of the pump chamber **42** near the closure ring **47**. Bore **50** serves as a drain for the return to the container of any liquid that may leak past the piston **44**. It also serves to vent air into the container **21** to replace the liquid discharged, this air having passed the closure ring **47** in a manner to be described shortly.

Lug **51** has a bore **92** therein that is part of the pump intake element **91**. Into this bore **92** fits the top of a dip tube **93**, the lower end of this dip tube extending to the bottom of the container **21**. Bore **92** communicates with the lower end of passage **94**. The upper end of passage **94** opens into the vertical end wall **52** of the bore **43** of pump chamber **42**.

Across the opening of passage **94** to end wall **52** is positioned a vertical disc **95** that opens and closes this opening, and thus serves as an intake valve for the pump **41**. In the construction shown, the disc **95** is held against the vertical end wall **52** by the pressure of one end of coiled spring **53** around the periphery of disc **95**. The other end of spring **53** bears against the piston **44**, as will be described shortly. The valve disc **95**, shown by itself in FIGURE 3, has a cut **96** around a major part of its periphery, at a radius shorter than the inner radius of the coil of spring **53** bearing against the valve disc **95**. This produces an area **97** of disc **95** that is hingedly connected at **98** to the outer ring **99** of disc **95**, the movable area **97** moving inwardly, as a result of the suction created in the bore **43** of the pump **41**, when the pump piston **44** is moved to the left (as shown in FIGURE 2). When the pump piston **44** is moved to the right, the movable area **97** of the valve disc **95** moves to the right (as shown in FIGURE 2), against the end wall **52** and so closes the opening to passage **94**.

The piston **44** of the pump **41** is preferably made of a suitable synthetic plastic having sufficient resiliency that the outer end of a rearwardly extending conical flange **54** bears against the cylindrical bore **43** of the pump chamber **42** to effect a seal around the periphery of the piston. The piston has in addition a radially extending rib **55** which also bears against the bore **43** and serves as a guide for the piston. The piston **44** has a forwardly extending collar **56** that fits snugly about the end of piston rod **45**, the rod having a small, outwardly extending rib **57** that fits into a corresponding recess in the interior of the collar to assist in securing the piston **44** upon the piston rod **45**.

The center of the piston **44** is hollow and formed with a conical shoulder **58** against which seats a ball **59** which is urged against the shoulder by a spring **60**. The other end of spring **60** extends into the bore **46** of the piston rod **46** and bears against a shoulder **61** in that bore. Ball **59** and its seat **58** thus serve as the outlet valve for pump **41**.

The piston **44** has a radial shoulder **62** surrounding the hollow bore of the piston **55** where this bore communicates with the pumping area of the pump **41**. Against this shoulder **62** abuts the forward end of spring **53**.

The closure ring **47** has a rearwardly extending flange **63** that fits snugly over the forward end of pump chamber **42**, the pump chamber having a small, outwardly extending rib **64** that fits into a corresponding recess in the underside of the flange **63** to assist in securing the closure ring **47** upon the pump chamber. The closure ring **47** also has a rearwardly extending cylindrical portion **65** that fits inside the bore **43** of cylinder **42**. The piston rod **45** passes through the central bore **66** of this cylindrical portion **65**.

Piston rod **45** has two radially extending studs **67** that move through longitudinal slots **68** in the closure ring **47** as the piston rod is reciprocated. The studs **67** fit loosely in these slots **68**, so that air can pass from the exterior of the pump chamber **42** through these slots **68** into the inside of the pump chamber in the region forwardly of the piston **44** (i.e., the region to the left of the piston **44**, as shown in FIGURE 2). From this region the air can pass through bore **50** into the container **21**, to replace the liquid discharged from the container.

The studs **68** move past the inner radial wall **69** of the cylindrical portion **65** of the closure ring **47** when the piston rod **45** is in fully depressed position (as shown in FIGURE 8). Hence, when the piston rod **45**, and its attached finger piece **71**, is rotated one quarter turn (as shown in FIGURES 7 and 8), the studs **68** lock behind the wall **69** and maintain the piston rod **45** and finger piece **71** in that position. In this position a circular rib **70** on the forward face of closure ring **47** engages a radial surface **74** at the rear of finger piece **71** to effect a seal thereat. Thus, in this position, the container **21** and its dispenser **35** can be shipped without any of the liquid in the container leaking out of the container. This is for the reason that the seal at surface **74** and rib **70** prevents the escape of any liquid that might leak out the passageways provided for venting air into the container during use of the dispenser.

To operate the dispenser, and assuming that initially it is in the locked-depressed position shown in FIGURES 7 and 8, the finger piece **71** is rotated one quarter turn clockwise, as viewed in FIGURE 7, to its position as shown in FIGURE 1. In that position the studs **67** no longer are locked behind the closure wall **69**, but are in alignment with the slots **68** in the closure **47**. The spring **53** thus moves the piston **44** forwardly (i.e., to the left, as shown in FIGURES 2 and 8) creating a reduced pressure in the area of the pump chamber **42** rearwardly of the piston. This reduced pressure causes the movable area **97** of valve disc **95** to move inwardly, and also causes the liquid in the container **21** to move upwardly through the dip tube **93** and intake passage **94**, past the intake valve disc **95**, into the bore **43** of the pump chamber **42**.

When the piston is moved by spring **53** to the point where collar **56** of the piston **44** engages the closure wall **69**, the piston **44** can move no further in the forward direction, and this constitutes the extended position of the parts, as shown in FIGURE 2.

In this position the liquid in the bore **43** of the pump chamber **42** to the right of the piston **44** (as viewed in FIGURE 2), tends to maintain the movable area **97** of the intake valve disc **95** against the vertical end wall **52** of the bore **43**, and thereby impede the flow of liquid back into the container.

The user now grasps the upper portion of container **21** in the palm of his hand, with his first finger engaging the finger pressure area **72** of the finger piece **71** directly in line with the axis B—B of the piston rod **45** and of the piston **44**.

When the user squeezes or pulls in with his first finger, in a manner similar to squeezing or pulling the trigger of a pistol, the finger piece **71** is moved inwardly (i.e., to the right as viewed in FIGURE 2) and with it is moved piston rod **45** and piston **44**. The liquid in the bore **43** of pump chamber **42** to the right of the piston **44** is thereby put under pressure.

The movable area **97** of the intake valve disc **95** is thereby further pressed against the vertical end wall **52** of the bore **43** of pump chamber **42** to prevent the flow of liquid back into the container.

The pressure to which the liquid in the bore **43** of pump chamber **42** to the right of piston **44** is subjected, when finger pressure is applied to the finger piece **71**, causes the ball **59** to unseat from the shoulder **57** (against which it is normally urged by spring **60**), and permit the liquid, under pressure, to escape from the pump chamber into the bore **46** of the piston rod **45** and move through the

bore **73** of the finger piece **71** to the bore **82** of the discharge element **81**. The liquid is then discharged through the nozzle **83** of the discharge element, in the direction of axis C—C, which is parallel to, but displaced above, the axis B—B of the piston rod.

It is to be noted that while the user holds the container **21** in a fixed position during the discharge of liquid from the container, the liquid discharged from the nozzle **83** is directed at one point or at a small circular area centralized about a single point.

It is also to be noted that the finger pressure applied to effect discharge of the liquid is applied directly along the axis of movement of the piston rod, so that there is no tendency to distort the various parts of the pump, or to cause any binding between any of its parts, or to unduly stress any of its plastic parts, during its discharge cycle of operation. In particular, the surfaces of piston **44** engaging the bore **43** of the pump chamber **42** are not subjected to pressures which are unequal about the periphery of the piston.

The end result is a dispenser which is simple in construction and can be made from synthetic plastics, except for the two springs **53** and **60** and the single ball **59**.

Various modifications can be made to parts of the dispenser without departing from the principle of the invention.

Examples of such modifications are shown in FIGURES 9–13, inclusive. To simplify the description of these modifications, parts therein corresponding exactly to parts described in connection with FIGURES 1–8 are identically numbered; and parts therein corresponding, with some modification, to parts described in connection with FIGURES 1–8 are numbered with reference numbers one hundred higher than those used for the corresponding parts in FIGURES 1–8.

As one example of a modification, the intake valve may be made as shown in FIGURES 9, 10 and 11. The plastic valve disc **195**, corresponding in basic function to the plastic vertical disc **95** of FIGURES 1–8, is an uncut disc, held vertically over the upper end of intake passage **94** by a retaining ring **101** interposed between spring **53** and the vertical end wall **52** of bore **43**. The retaining ring **101** has a cylindrical recess **102** into which the valve disc **195** fits loosely, the axial depth of the recess being larger than the thickness of the disc **195** so that the disc **195** may move away from the end wall **52** and uncover the opening to the upper end of the intake passage **94**.

In addition, the retaining ring **101** has multiple openings, such as the center hole **103**, the peripheral holes **104**, and the radial slots **105** connecting the center hole **103** with the peripheral holes **104**, through which the liquid that passes between the valve disc **195** and the end wall **52** in the intake portion of a cycle of operation of the dispenser, may readily pass through the retaining ring **101** into the bore **43** of the pump chamber **42**.

As another example of a modification, FIGURES 12 and 13 illustrate a modification made to the discharge element **81**, the finger piece **71**, and the piston rod **45** of the dispenser shown in FIGURES 1–8. In making those parts in the form shown in FIGURES 1–8, the discharge element **81**, finger piece **71** and piston rod **45** are conveniently molded as two halves of a single molded part, the dividing plane for the two halves being a vertical plane through the axes B—B and C—C. The two separately molded halves are then secured together by adhesive or other suitable means.

In the modified construction shown in FIGURES 12 and 13, the piston rod **145** and finger piece **171** are molded as a complete single part, and the discharge element **181** is molded as a separate, complete single part having a downwardly extending hollow tube portion **184** at its rear, fitting into an annular shoulder **175** formed at the upper end of a vertically extending hollow tube portion **176** positioned behind the finger pressure area **172** of finger piece **171**, and integral therewith. The bore **146** of piston rod **145** communicates with the bore **173** of the finger piece **171** (which is the inside of tube portion **176**). The bore **182** of the discharge element **181** communicates with the bore **185** of the tube portion **184**. Hence, when the discharge element **181** is secured to the back of finger piece **171** by fitting the lower end of tube portion **184** into the shoulder **175**, there is a passageway for the flow of liquid from the bore **43** of pump chamber **42**, past the ball valve **59** into the bore **146** of the piston **145**, through the bore **173** of finger piece **171**, through the bores **185** and **182** of discharge element **181**, and out the nozzle **183**.

In this modification the upper part of the finger pressure area **172** extends in wings **177** above the axis of the bore **182** of the discharge element **181** on either side of that element, so that these wings protect the discharge element **181** against extraneous lateral forces against it.

The dispenser of this invention is a simple and useful device for administering a uniform dose of a medicament into the mouth of a small animal, such as a piglet, which is held against the body by one arm and hand while the other hand is used to operate the dispenser and aim the discharge of liquid into the animal's mouth. When so used, the length of bore **82** is preferably about two inches, so that it can be inserted in the animal's mouth to deposit the medicament on the back of the animal's tongue. During such administration of the medicament into the mouth of the animal, the container **21** is held in one position throughout. This makes for ease of administration, uniformity of dose, and no leakage of the liquid from the sides of the animal's mouth.

The dispenser of this invention will dispense not only watery liquids, but also is capable, even though made of synthetic plastic material, to dispense uniform doses, of the order of 1.25 cc. each, of liquids which contain a substantial amount of solids suspended in an oily vehicle, such as corn oil, and so have an appreciable viscosity, such as of the order of 900 centipoise (as measured by a Brookfield Model LVT viscosimeter, using a number 2 spindle at 12 r.p.m.).

I claim:

1. In a manually-operated pistol-grip, pump-type dispenser for dispensing liquid from a substantially cylindrical, open-top container, the pump (a) being affixed to and positioned just above a closure for the container, (b) having a cylindrical pump chamber, the axis of which is substantially at right angles to the longitudinal axis of the container., (c) having a cylindrical piston within the pump chamber and (d) having a tubular reciprocating piston rod at the axis of the pump chamber and piston through which the liquid being pumped from the container flows to the discharge nozzle when the piston rod, and the piston connected thereto, are manually moved from their extended, forward position (to which they are biased by a spring) to their depressed, operated, rearward position, the pump (e) also having a discharge valve within the piston for releasing the liquid in the chamber of the pump into the bore of the piston rod when the rod and piston are moved from their extended, forward position to their depressed, operated, rearward position, and (f) having an intake valve controlling the flow of liquid between a dip tube extending down into the container and the pump cylinder, and with the dispenser having a member (i) secured to the piston rod externally of the pump cylinder, (ii) with one part of such member serving as a discharge nozzle and having its axis of discharge oriented substantially parallel to the longitudinal axis of the pump chamber and piston rod but displaced above such axis when the dispenser is in condition for operation, (iii) with another part of such member serving as a finger pressure area so that pressure upon such area moves the piston from its extended, state-of-rest, forward position to its depressed, operated, rearward position and (iv) with a passageway connecting the

piston rod with the discharge nozzle so that liquid flows from the exterior end of the piston rod up to the discharge nozzle when the piston is moved from its extended, state-of-rest, forward position to its depressed, operated rearward position, the improvement in said dispenser in which:

(A) the chamber in which the pump piston reciprocates is closed by a closure ring through which the piston rod passes and extends forwardly therefrom;

(B) the piston rod has at least one lug extending radially beyond the exterior surface of the rod, the position of the lug axially on the piston rod being such that it is just inside an adjacent inner wall of the closure ring when the piston rod and piston are in their depressed, operated, rearward position; and

(C) the closure ring has a longitudinal slot for each such lug, each lug moving in its corresponding slot when the piston rod and piston reciprocate between their extended, forward position and their depressed, operated, rearward position;

whereby, when the piston rod and piston are in their depressed, operated, rearward position, they may be rotated about their longitudinal axis, by rotating the member having the finger pressure area, to position each lug behind a part of the adjacent inner wall of the closure, ring that has no slot therein, and thereby lock the piston rod and piston in their depressed, operated, rearward position.

2. A dispenser as set forth in claim **1** in which the thickness of the closure ring, in its central area through which the piston rod passes, is sufficiently thick that the radial lug or lugs on the piston rod, when the piston rod is moved to its extended, forward position, are still within their corresponding slots in the closure ring, so that the piston rod cannot be rotated when it is in its extended, forward position.

3. A dispenser as set forth in claim **2** in which:

(a) there is a passageway to the container from the chamber in which the pump piston reciprocates, the passageway connecting with such chamber forwardly of the position of the piston when in its extended, forward position, so that any liquid that leaks forward past the piston is returned to the container; and

(b) the slots in the closure ring extend completely through the closure ring, and the fit of the radial lugs in these slots is loose, so that these slots, together with the liquid returning passageway, serve to vent air into the container to replace the liquid discharged therefrom.

4. A dispenser as set forth in claim **3** in which:

(a) the exterior wall of the closure ring perpendicular to the axis of the piston rod is provided with a circular rib of uniform height centered about the axis of the piston rod; and

(b) the rear of the member having the finger pressure area has a surface centered about the axis of the piston rod that engages the circular rib when the piston rod is in its depressed, operated, rearward position, and continues in engagement with the rib when such member and piston rod are rotated to lock the piston rod in its depressed, operated, rearward position, the rib and rear surface of such member thereby serving, while the dispenser is so locked, to effect a seal to prevent the escape of liquid from the container through the air venting passageways.

References Cited by the Examiner

UNITED STATES PATENTS

1,410,878	3/1932	Benshoof	222—385 X
2,004,275	6/1935	Rothchild et al.	222—321
2,753,079	7/1956	Hersey	222—382 X
2,753,578	7/1956	Lebet	222—383 X
3,179,306	4/1965	Corsette	222—384 X

ROBERT B. REEVES, *Primary Examiner.*

N. L. STACK, *Assistant Examiner.*