Feb. 7, 1967 H. J. MODREY 3,302,509

EXPANSION ANCHOR

Filed April 3, 1964 3 Sheets-Sheet 1

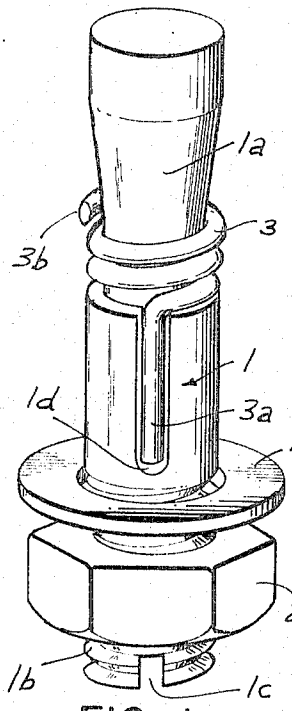

FIG. 1

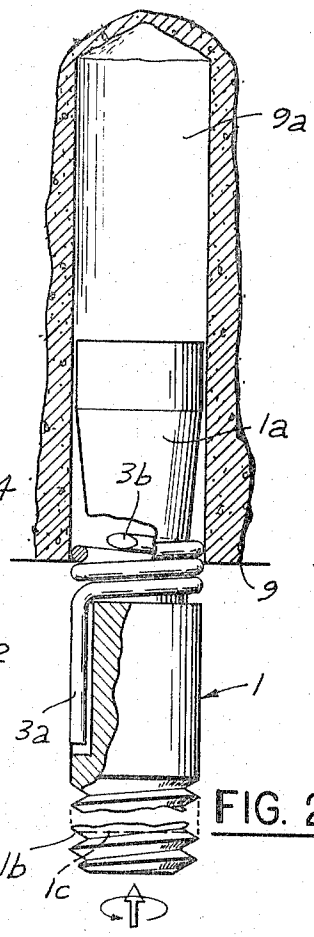

FIG. 2

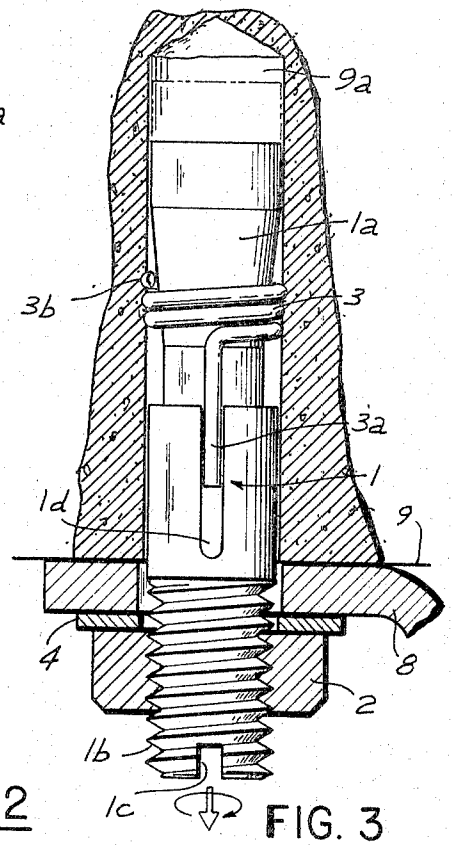

FIG. 3

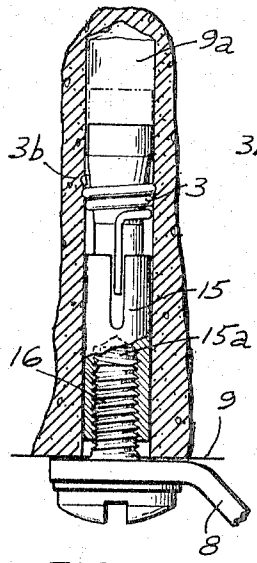

FIG. 4

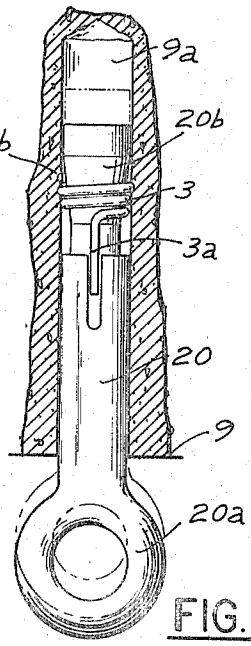

FIG. 5

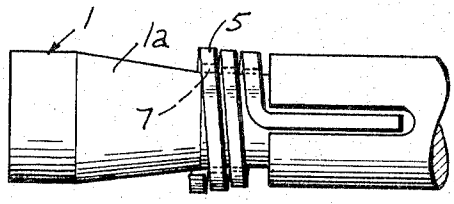

FIG. 6

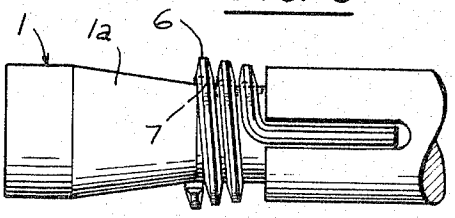

FIG. 7

INVENTOR.
HENRY J. MODREY
BY Hane and Nydick
ATTORNEYS

Feb. 7, 1967 H. J. MODREY 3,302,509

EXPANSION ANCHOR

Filed April 3, 1964 3 Sheets-Sheet 2

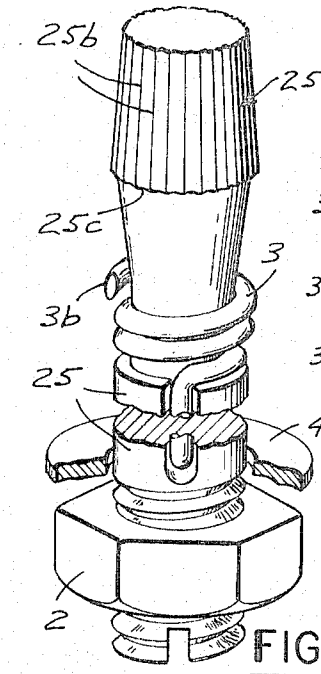

FIG. 8

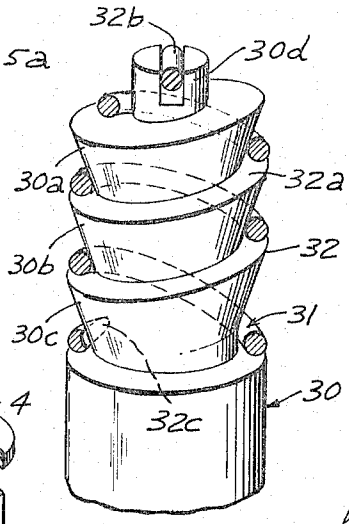

FIG. 9

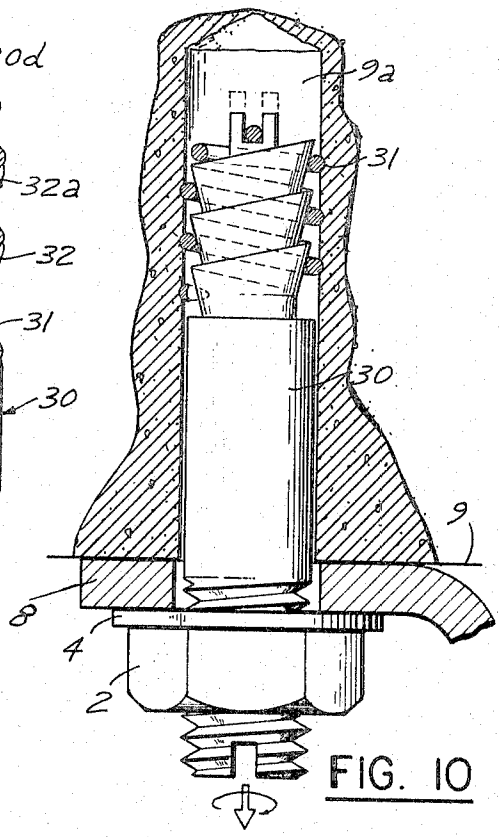

FIG. 10

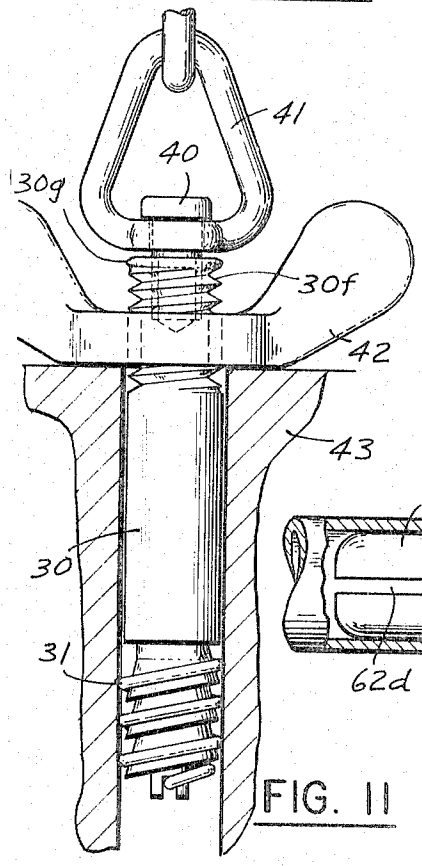

FIG. 11

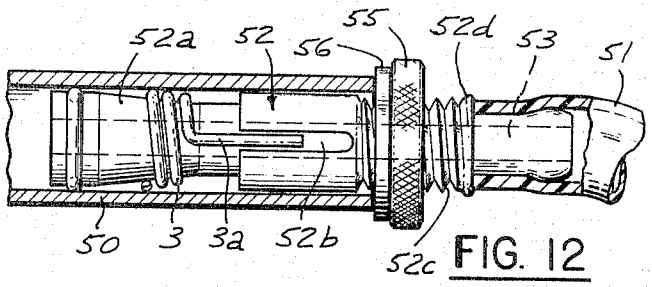

FIG. 12

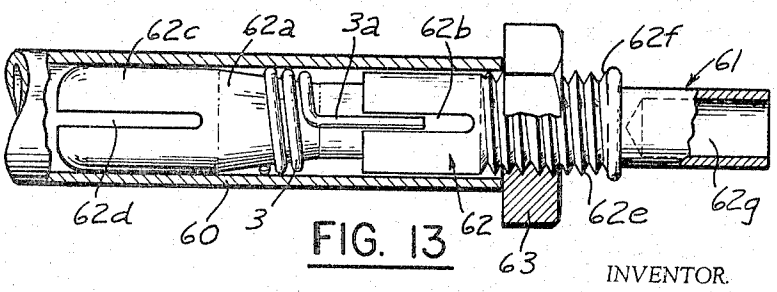

FIG. 13

INVENTOR.
HENRY J. MODREY
BY Hauser and Nydick
ATTORNEYS

EXPANSION ANCHOR

Filed April 3, 1964 3 Sheets-Sheet 3

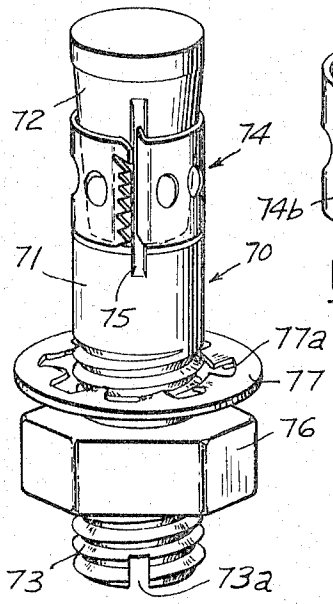

FIG. 14

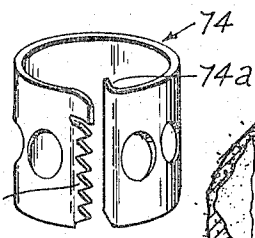

FIG. 15

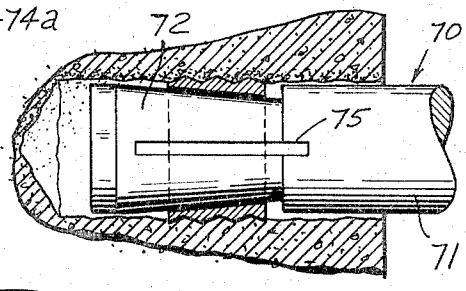

FIG. 17

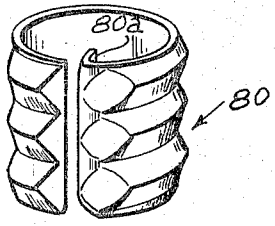

FIG. 16

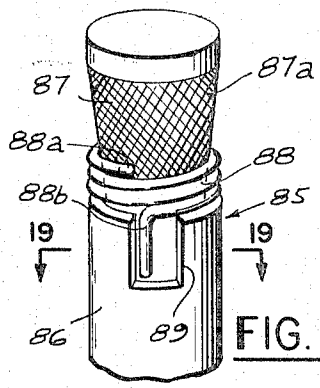

FIG. 18

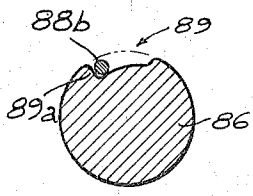

FIG. 19

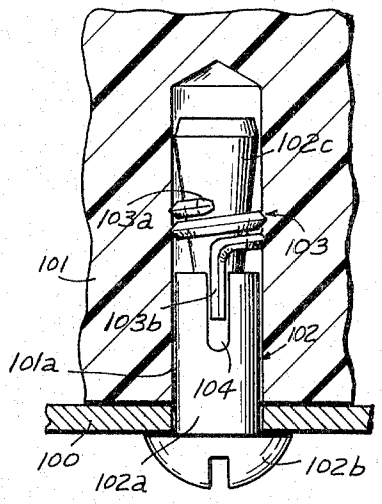

FIG. 21

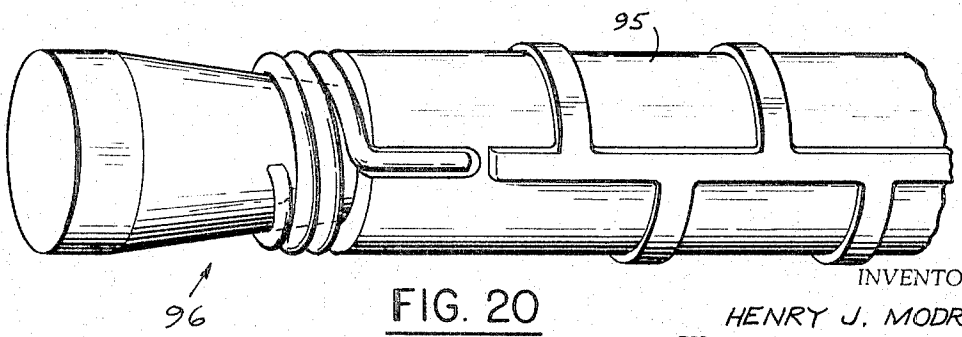

FIG. 20

INVENTOR.
HENRY J. MODREY
BY Hane and Hydick
ATTORNEYS

United States Patent Office

3,302,509

Patented Feb. 7, 1967

1

3,302,509

EXPANSION ANCHOR

Henry J. Modrey, 158 Eagle Drive,
Stamford, Conn. 06903

Filed Apr. 3, 1964, Ser. No. 357,073
8 Claims. (Cl. 85—64)

The invention relates to expansion type anchors for anchoring in a mounting hole, preformed in a support wall.

There are known expansion type anchors which are anchored in the mounting hole by anchoring means in the form of substantially shovel or pad-shaped members movable from an inactive position in reference to the bolt of the anchor into an expanded or anchoring position radially protruding from the periphery of the bolt, by tightening the locking means of the anchor. In the inactive position the anchor shovels are in slight frictional engagement with the wall of the mounting hole to provide the starting friction required by the locking means, while in the anchoring position the anchoring shovels are in force-transmitting, frictional engagement with the wall of the mounting hole. Such force-transmitting, frictional engagement, which is in the nature of a camming action, is increased by the action of a load tending to retract the anchor from its mounting hole, as such pull load causes the anchor shovels to be further expanded in reference to the bolt. In other words, the force with which an anchor is locked in its mounting hole increases in proportion to the applied pull load.

With anchors of the general kind above referred to, the expansion of the anchor members and hence the application of the anchoring force to the wall of the mounting hole is limited to the areas of engagement between the anchor members. Due to such localized application of force, the anchor members sometimes tend to crack or split the wall material in which the mounting hole is formed, especially when the hole is formed in a comparatively thin concrete section. In soft or crumbly materials, localized anchor members tend to shear out of the hole when a pull load is applied.

Further, expansion anchors of the aforedescribed type require accurately dimensioned mounting holes to provide the afore-referred to starting friction for the locking means. Drilling or otherwise producing accurate and uniform hole diameters in material such as concrete is not easy, or at least not always convenient, especially in outdoor construction work.

Another limitation inherent in expansion anchors as heretofore known is that the anchors once locked in a mounting hole cannot be conveniently removed therefrom.

It is a broad object of the invention to provide a novel and improved expansion-type anchor of the general kind above referred to which, when being tightened, is expanded through an angle of 360 degrees. Hence the anchoring force is applied along the entire periphery of the anchor rather than at localized circumferentially spaced areas only, thereby correspondingly increasing the anchoring force and reducing the danger of splitting of the wall material or pulling out of the same by the shovels or pads forming grooves in the wall material due to the application of localized pressure.

It is also a broad object of the invention to provide a novel and improved expansion-type anchor of the general kind above-referred to which can be conveniently and simply adapted to both undersized and oversized mounting holes within a comparatively wide range, by contracting the effective outer diameter of the anchor during insertion thereof into an undersized hole, or expanding the effective outer diameter of the anchor

2

during insertion into an oversized hole, to provide the afore-described starting friction.

A further broad object of the invention is to provide a novel and improved expansion-type anchor of the general kind above referred to which, when locked in its mounting hole, can be easily and conveniently removed without danger to the anchor by simply contracting the anchor to its initial diameter, or even a lesser diameter.

Still another broad object of the invention is to provide a novel and improved expansion-type anchor including anchoring means in the form of a member which is diametrically expandable by retracting the bolt of the anchor in reference to the member. Such expansion action results in an anchoring force which is uniformly distributed about the circumference of the anchor and which is so high that the anchor can be safely locked, not only to comparatively rough materials such as concrete, but also in smooth materials such as plastic, metal or wood.

A specific object of the invention is to provide a novel and improved anchor of the general kind above-referred to in which the diametrically expandable member is in the form of a wire coil, the diameter of which is increased by retracting a conical portion of the bolt in reference to the coil.

Another specific object of the invention is to provide a novel and improved anchor of the general kind above-referred to in which the diametrically expandable member is in the form of a lengthwise slotted sleeve, the outer diameter of which is increased by retracting a conical portion of the bolt in reference to the sleeve.

A further specific object of the invention is to provide a novel and improved expansion type anchor having a locking coil capable of cutting internal threads in the wall of the mounting hole in which the anchor is fitted whereby a component to be mounted by the anchor will be tightly pressed against the member in which the anchor is mounted when the bolt of the anchor is tightened in the mounting hole in the same manner as standard wood or metal screw is tightened.

Another specific object of the invention is to provide a novel and improved expansion-type anchor which may be adapted to oversized holes by twisting the coil or sleeve in one rotational direction in reference to the bolt, thereby increasing the diameter of the coil or sleeve, and to undersized holes by twisting the coil or sleeve in the opposite rotational direction to reduce the effective outer diameter of the coil or sleeve.

Still another specific object of the invention is to provide a novel and improved expansion-type anchor which can be withdrawn from the mounting hole in which it is locked by twisting the coil or sleeve in the direction for tightening the same. The resulting reduction in diameter releases the locking grip of the anchor and frees the same for withdrawal.

Another specific object of the invention, allied with the next preceding one, is to provide a novel and improved expansion-type anchor which, due to its capability of convenient and rapid release from its locked condition, lends itself to use as a coupling device for coupling pipes or hoses and electric conductors and also to use as a carrier for loads to be transported from one location to another.

A further specific object of the invention is to provide a novel and improved expansion-type anchor, the structure of which permits manufacture in a wide range of sizes including miniature sizes which were not possible with expansion anchor structures as heretofore known. Miniature anchors according to the invention may be used for many applications to which such anchors were heretofore not applicable, such as substitutes for tappings or screw inserts.

Another more specific object of the invention is to provide a novel and improved expansion-type anchor in which the load acting upon the coil when the anchor is locked in its mounting hole, is substantially uniformly distributed upon all the windings of the coil. Such a structure is particularly advantageous for anchors subjected to heavy pull loads.

A still further object of the invention is to provide a novel and improved expansion-type anchor which permits a selection of the material used for the components of the anchor in accordance with the requirements of a specific application. The coil or sleeve may be given different cross sections and different metals may be used for forming the coil or sleeve, depending upon the desired locking force and the bolt may be made of metal or plastic, again depending upon the specific requirements of the application. Anchor bolts made of wood have been found to be suitable for use as dowels in furniture assembly.

It is also an object of the invention to provide a novel and improved expansion-type anchor which can be secured to a reinforcing bar and used to join two bodies, such as slabs of concrete.

Another object of the invention is to provide a novel and improved expansion-type fastener which can be manufactured at a cost less than expansion anchors of comparative size as heretofore known. Bolts as used in anchors according to the invention may be produced on a heading machine and the wire coil may be wound on a spring winder directly on the bolt, or separate therefrom and pushed over the front end of the bolt.

Still another object of the invention is to provide a novel and improved expansion-type anchor, the components of which are firmly held together so that they cannot accidentally separate during storage or shipping of the anchor.

Other and further objects, features and advantages of the invention will be pointed out hereinafter and set forth in the appended claims constituting part of the application.

In the accompanying drawing several preferred embodiments of the invention are shown by way of illustration and not by way of limitation.

In the drawing:

FIG. 1 is a perspective view of an anchor according to the invention,

FIG. 2 is a sectional view of the anchor partly inserted into a mounting hole,

FIG. 3 is a sectional view similar to FIG. 2, but showing the anchor fully inserted and tightened or locked,

FIG. 4 is a view, partly in section, of a modification of the anchor locked in a mounting hole,

FIG. 5 is a view of another modification of the anchor which operates without a threaded member,

FIG. 6 is a fragmentary view of an anchor showing a modified wire coil,

FIG. 7 is a view similar to FIG. 6, but showing another modification of the wire coil,

FIG. 8 is a perspective view, partly in section, of still another modification of the anchor,

FIG. 9 is a fragmentary view of the bolt of a modified bolt of the anchor,

FIG. 10 is a view of an anchor using the bolt of FIG. 9 and shown tightened or locked in a mounting hole,

FIG. 11 is a view of still another modification of the anchor locked in a mounting hole, the anchor being designed for carrying loads,

FIG. 12 is a view, partly in section, of an anchor designed for use as a quick-release pipe or hose coupling,

FIG. 13 is a view, partly in section, of an anchor designed for use as a quick-release electrical connector,

FIG. 14 is a perspective view of a further modification of the anchor bolt,

FIG. 15 is an enlarged detail view of the diametrically expandable member of the anchor,

FIG. 16 is a perspective view of a modification of the diametrically expandable member of the anchor,

FIG. 17 is a view, partly in section, of an anchor uilizing the expandable member of FIG. 16,

FIG. 18 is a perspective view of another modification of the anchor,

FIG. 19 is a section taken on line 19—19 of FIG. 18,

FIG. 20 is a perspective view of a concrete reinforcing bar headed by an anchor according to the invention for anchoring the bar in a mounting hole, and

FIG. 21 is a view of an anchor functioning in the manner of a screw for securing two parts to each other.

Referring first to FIGS. 1, 2 and 3 in detail, the exemplification of the anchor shown in these figures comprises a bolt 1 made of suitable material. In many instances the bolt will be made of a hard metal, but it may also be made of plastic or wood, depending upon the field of application for which it is intended. A wooden bolt may, for instance, be used as a dowel in furniture assembly. The bolt is formed with a conical portion 1*a* outwardly tapered toward the leading end of the bolt. The trailing end portion of the bolt is threaded at 1*b* to receive a nut 2 used for tightening and turning of the bolt, as will be more fully explained hereinafter. However, instead of a threaded bolt and a nut 2, other bolt-tightening means may also be used and are shown in other figures to be subsequently described. The trailing end face of the bolt may be formed with a screwdrive slot 1*c*, the purpose of which will also be described hereinafter.

A diametrically expandable member shown as a wire coil 3 is wound upon the tapered portion 1*a*. The coil wire is not necessarily springy. Various metals such as stainless steel or nonferrous metals may be used for the wire, again depending upon the specific application for which the anchor is intended. The coil can be wound directly upon the bolt, for instance by a spring winder, but it can also be separately wound and it is then pushed over the leading end of the bolt. One end of the coil is held captive by the cylindrical portion of the bolt. To effect such attachment of the coil to the bolt, the coil may be formed with tang 3*a* which is slidably fitted in a lengthwise groove 1*d* of the bolt. Depending upon the characteristics of the coil wire, the end of the coil may also be simply forced into a hole of the bolt, or be spot-welded thereto. The other end of the coil is cut at a slant such as an angle of about 60° to terminate in a substantially spade-shaped portion 3*b* which is slightly bent outwardly, as it is clearly shown in FIG. 1.

The cross section of the wire is shown in FIGS. 1, 2 and 3 as being round, but other cross sections may also be used. There is shown in FIG. 6 a coil 5 having a substantially square wire cross section and in FIG. 7 a coil 6 having a wire cross section in the form of a truncated triangle. The selection of the cross section of the coil wire is determined by the material in connection with which the anchor will be used.

The wire coil is shown in FIG. 1 as occupying a space in which it surrounds the narrow end of cone-shaped bolt portion 1*a* and it is so wound that play or clearance is left between the wall of bolt portion 1*a* and the inner diameter of the coil. Such clearance or play is indicated in FIGS. 6 and 7 by dotted double lines at 7.

A washer 4 may be placed upon the bolt to prevent it from turning when the nut is tightened against a support wall.

The function of the anchor as hereinbefore described is as follows:

Let it be assumed that an anchor as shown in FIG. 1 is to be locked in a mounting hole 9*a* drilled into support wall 9 which may be a concrete wall. Let it further be assumed that hole 9*a* is a correctly sized hole, that is, a hole of a diameter such that the outer periphery of the windings of coil 3 is in slight frictional engagement with the wall of the hole. However, it should be pointed out

that such engagement is not essential during the initial stage of the locking operation, now to be described.

The anchor is pushed into the dotted line position of FIG. 3 and nut 2 and washer 4 are fitted upon the threaded portion 1*b* of the bolt to hold component 8 between the washer and support wall 9. To effect tightening or locking of the anchor in the mounting hole, nut 2 is turned in clockwise direction as seen upon the trailing or threaded end of the bolt and as it is indicated in FIG. 3 by a curved arrow. As a result of such turning of the nut, the bolt will turn together with the nut and in reference to the wire coil, the latter being restrained by the projecting spade tip 3*b* of the top coil which digs into the wall of the hole. Turning of the bolt causes twisting of the coil in the direction for unwinding the coil windings, thereby correspondingly increasing the outer diameter of the coil. This increase of the coil diameter will obviously force the coil into an increased frictional grip with the surrounding wall portions and such increased frictional grip will be along substantially the entire circumference of the coil, that is through an angle of 360 degrees. A turning of the bolt through an angle of about 10 degrees is generally sufficient to obtain the required initial radial expansion of the coil, and this is automatically imparted to the bolt when the nut is tightened. The anchor is now locked in the mounting hole with a frictional grip which is sometimes hereinafter referred to as the initial force-transmitting engagement.

When now nut 2 is further tightened while abutting against the wall surface 9, bolt 1 which remains stationary due to the action of spade portion 3*b*, is retracted from the mounting hole and as a result of such retraction the tapered bolt portion 1*a* is forced deeper into coil 3 which is held stationary due to the aforedescribed strong frictional engagement with the wall of hole 9*a*. The resulting radially outwardly directed pressure exerted by the tapered bolt portion upon the coil will expand the latter further, that is into an increased force-transmitting engagement with the hole wall. When a pull load is applied to the anchor by component 8 in the direction indicated in FIG. 3 by the downwardly directed arrow, it will further retract the bolt, thereby increasing the diameter of the coil and reinforcing the locking engagement between anchor and hole. As it is evident from the previous explanation, the force with which the anchor is locked in its mounting hole, increases as the pull load is increased.

FIG. 3 shows that the uppermost coil winding, that is the coil winding closest to the leading end of the bolt has dug rather deeply into the wall material, the next winding has dug in less deeply and the lowermost winding just presses against the surface of the wall.

Let it now be assumed that mounting hole 9*a* is oversized. As has been described in connection with FIG. 1, coil 3 terminates at its free end in the outwardly bent spade-like portion 3*b*. When now nut 2 is tightened against support 9, the rotation of the nut will be transmitted to the bolt and by the bolt to the coil which is held captive on the bolt by means of tang 3*a*, or other suitable means. The outwardly bent, spade-shaped coil end 3*b* will dig into the wall material—assuming of course that the oversized dimensions of the mounting hole are within practical limits—and as a result the coil windings will be unwound and thus radially expanded whereby the coil comes into engagement with the wall material. The further locking action of the anchor including retraction of the bolt then progresses as previously described.

Let it now be assumed that the mounting hole is undersized, that is, that the anchor cannot be conveniently pushed into the mounting hole when the coil is in its normal or relaxed position as shown in FIGS. 1 and 2. The anchor is then pushed into the mounting hole as far as it will conveniently go. FIG. 2 shows the anchor partly inserted into the mounting hole. The bolt is now turned in counterclockwise direction as seen upon the trailing end of the bolt and as it is indicated in FIG. 2 by a curved arrow, that is, in the direction opposite to the one previously described. As a result the coil which is held captive on the bolt at its tang 3*a* is tightened, that is, the coil is contracted within the limits permitted by the play or clearance 7 indicated in FIGS. 6 and 7. Due to such reduction in the outer diameter of the coil, it will now be possible to push the coil into the position shown in FIG. 3. Turning of the bolt in counterclockwise direction may be conveniently effected by inserting a suitable tool into screwdriver slot 1*c*. The locking of the anchor in the mounting hole is then effected by tightening the nut in clockwise direction, as has been previously described.

The just-described possibility of reducing the coil diameter by turning the bolt in counterclockwise direction, that is, from the outside of an installed anchor, may be advantageously used to remove a locked anchor from its mounting hole. Referring to FIG. 3, the locked anchor shown in this figure can be loosened by turning bolt 1 in counterclockwise direction. Such turning will reduce the outer diameter of the coil, thereby releasing the coil from the wall of the mounting hole.

Nut 2 may either be an ordinary nut, but the specific features of the invention permit the use of a lock nut also. Either type, when tightened, will permit turning of the bolt to retract the bolt as required for expanding coil 3 into force-transmitting circumferential engagement with the surrounding wall material. The use of a lock nut with its attendant advantages was not conveniently possible with expansion anchors as heretofore known. Any appreciable friction between the nut and the bolt of the anchor will cause the bolt to idle, that is, to turn together with the nut without effecting expansion. If it is desired to use a lock nut with conventional anchors, special tools are required to hold the bolt stationary while the nut is being turned. With the anchor according to the invention, the bolt is safely held stationary by protruding tip 3*b* biting into the wall material.

The sizes of the anchor shown in FIGS. 1, 2 and 3 or in the subsequent figures are by no means indicative of the actual sizes of the anchors. As stated before, the structure according to the invention permits the design and manufacture of anchors of practically any size, from very large anchors to miniature anchors.

FIG. 4 shows an anchor similar in principle and structure to the previously described anchor. The only difference is that the bolt 15 of the anchor is formed at its trailing end with an internally threaded bore 15*a*. A headed screw 16 is screwed into this bore and serves the same purpose as nut 2, namely to impart a turn to the bolt causing the retraction of the bolt and the expansion or contraction of coil 3.

FIG. 5 shows an anchor designed for use as a hanging hook. The bolt 20 of the anchor terminates at its trailing end in an eye 20*a* or a hook. Of course any other element suitable for supporting a component may also be used, such as a wire rope terminal.

The anchor is simply pushed into its mounting hole. Application of a pull load will further retract the bolt in reference to the coil, thereby pulling the conical portion 20*b* of the bolt deeper into the coil. As a result the coil is further expanded and the load carrying capacity of the anchor is correspondingly increased. FIG. 5 shows the retracted position of the bolt in full lines and the initial position in dotted lines.

The anchor may be released by turning the bolt in counterclockwise direction, thereby contracting the coil due to the engagement thereof at the end 3*a* with bolt 20, as has been described in connection with the preceding figures. Similarly, contraction of the coil and the resulting decrease in the outer diameter thereof by turning the bolt in counterclockwise direction may be used for inserting the anchor into a slightly undersized hole.

In the event the anchor is subjected to a very heavy pull load, it may occur, especially when the mounting

hole is oversized, part of the coil, particularly the most forward winding of the coil, may be squeezed between the adjacent cylindrical part of the bolt and the surrounding wall material, thereby making it difficult or even impossible to release the anchor by turning the bolt in reverse direction as previously described. Furthermore, the aforedescribed squeezing of the uppermost coil winding will reduce the force with which the anchor is retained in its mounting hole. FIG. 8 shows an anchor structure in which such squeezing out of coil windings is effectively prevented.

The anchor of FIG. 8 has a bolt 25 which terminates at its leading end in a truncated portion 25*a* which is outwardly tapered toward the trailing end of the bolt. The narrow end of portion 25*a* has a diameter slightly less than the diameter of the minimum hole that may be encountered and the diameter of the wide end of the portion corresponds to the diameter of the normal hole size. The side walls of portion 25*a* are formed with slanted, preferably straight, knurls 25*b*. The ridges of the knurling act as chisels which make it convenient and practical to drive the anchor into the mounting hole to the required depth.

The locking and release function of the anchor will be evident from the previous description. The inner edge 25*c* of the conical bolt portion 25*a* forms a ridge 25*c* between bolt portion 25*a* and inwardly slanted bolt portion 25*d*. This ridge abuts against the wall material and thus acts as a shoulder against which the top winding of the coil abuts when a heavy load acts upon the anchor. As a result, the top winding cannot be squeezed out, thereby increasing considerably the force with which the anchor is locked in its mounting hole. Such retaining action of ridge 25*c* can be further increased by making the diameter of cone portion 25*a* at the lower rim thereof slightly in excess of the true hole diameter. The diameter of the cylindrical portion of the bolt may be slightly less than the true diameter of the mounting hole.

As has been explained in connection with FIG. 3, the coil winding closest to the leading end of the bolt is pressed deepest into the wall material and thus supports the greatest portion of the load. The next winding carries less load and the last winding, the smallet portion of the load. In certain instances, for instance when the anchor is to be used for sustaining heavy loads or is to be anchored in a hole with a smooth wall such as a hole drilled into metal, it is desirable to distribute the load more uniformly over the entire coil.

FIG. 9 shows part of a bolt 30 and a coil 31 which are designed for such more uniform distribution of the load upon the coil.

In the structure of FIG. 9 the continuous conical portion of the bolt is broken up into several conical portions 30*a*, 30*b* and 30*c* and a helical thread 32 with a high pitch is formed along the conical portions. The coil 31 is wound along the helical thread which preferably has landings 32*a* for this purpose. The end of the coil is again held captive by the bolt by providing a slotted bolt portion 30*d* into which a bent-off tang 32*b* of the coil is extended. The other end of the coil is spade-shaped at 32*c* and is slightly bent out, as has been described in connection with FIG. 1 and other figures, to dig into the wall of the mounting hole.

FIG. 10 shows an anchor which utilizes the bolt 30 and coil 31 of FIG. 9. The coil is wound with slight play upon the bolt as has been explained in connection with FIGS. 6 and 7 and may be expanded by retracting the bolt by means of nut 2. The thus obtained circumferential engagement of the outer periphery of the expanded coil with the surrounding wall material is further increased by application of a pull load to the anchor. Such pull load will tend to retract the bolt further in the direction of the downwardly pointing arrow, thereby forcing each of the helical cone portions 30*a*, 30*b* and 30*c* (see FIG. 9) deeper into the respective coil winding.

The afore briefly described double expansion of the coil is evident from the more detailed description of the preceding figures. It is also now evident that in contrast to FIG. 3, each of the coil windings coacts with its own cone portion and all the windings will be pressed against the wall material with substantially equal force, thereby distributing the entire load to be sustained substantially uniformly over the coil windings.

The release of the locked anchor may again be effected by turning the bolt in counterclockwise direction, usually through an angle of about 10 degrees. Such turning will cause a diametrical contraction of the coil windings in the same manner as has been described in connection with the preceding figures.

FIG. 11 shows an anchor using the bolt 30 of the type described in connection with FIGS. 9 and 10. The anchor is designed specifically as a gripping device for lifting loads such as steel dies or molds. As has been pointed out before, the gripping capability of an anchor according to the invention is so high that the anchor can be safely used to lift heavy metal loads 43 or other loads which will have smooth surfaces when a mounting hole is drilled into the same.

The threaded portion of the anchor terminates in a collar 40 to mount a hook or shackle 41 by means of which the anchor and the load locked thereto may be suspended from an overhead conveyor. A wing nut 42 is threaded upon the threaded portion 30*f* of the bolt and tightening of the nut against the surface of the load 43 will cause retraction of the bolt to effect expansion of spring 31 in the manner previously described. Nut 42 has the double purpose of effecting retraction of the bolt and securing the locked anchor against involuntary release when the pull load is relaxed. As it is evident, nut 42 limits the unwinding and acts in the manner of a clutch.

To effect release of the anchor the nut is turned until it abuts against the flattened top thread 30*g* of threaded bolt portion 30*f*. A continued turning of the nut will then turn bolt 30 in the direction for contracting coil 31 to release the same from engagement with the wall of the mounting hole.

The principle of the invention, due to its aforedescribed capability of quickly and conveniently locking and releasing, lends itself to use in other devices which require such actions. Two devices of this kind are shown by way of example in FIGS. 12 and 13. More specifically, FIG. 12 shows a hose or pipe coupling and FIG. 13 an electrical connector. The locking and release mechanism as used in the devices of FIGS. 12 and 13 is the same in principle as previously described and will hence be readily understandable.

The hose or pipe coupling of FIG. 12 comprises a sleeve 50 which should be visualized as one end of a pipe to which a hose 51 is to be coupled by a liquid or gas-tight connection. Hose 51 mounts the anchor member proper which in this instance is used as a coupler. The coupler comprises a bolt 52 which is formed with a lengthwise bore 53 to permit the flow of fluid from hose 51 to pipe 50 and vice versa. Bolt 52 has a tapered portion 52*a* upon which is mounted the wire coil 3 held captive by the bolt by means of tang 3*a* lengthwise slidable in a recess 52*b* in bolt 52. The bolt has a threaded portion 52*c* which terminates in a flattened thread 52*d*. A nut 55 is threaded upon bolt portion 52*c* and a sealing washer 56 is preferably interposed between nut 55 and the respective rim of sleeve 50.

The locking and release functions of the anchor or coupler are generally apparent from the previous description. It suffices to state that the coupler is locked by screwing nut 55 tight. This will retract bolt 52 sufficiently to expand coil 3 into force-transmitting engagement with sleeve 50. Release of the coupler is effected by turning nut 52 into the opposite direction and until it seats itself against flattened thread 52*d*. A slight continued rotation of the nut in the same direction will

then turn bolt **52** in the direction for contracting the coil, thus releasing the coupler.

FIG. 13 is a single-pole power connector. The connector comprises a conductive sleeve **60** which constitutes one of the conductors to be connected and the anchor **61** which constitutes the connecting mechanism of the connector. A second conductor (not shown) may be secured to the connector mechanism **61** in any electrically safe and effective manner.

The anchor or connecting mechanism **61** comprises a bolt **62** formed with a conical or tapered portion **62***a* upon which is wound the wire coil **3**. The coil is again held captive by engagement of its tang **3***a* with a lengthwise recess **62***b*. The leading portion **62**c of the bolt is cylindrical and preferably slotted at **62***d* to effect a frictional engagement between bolt portion **62***c* and the inner wall of sleeve **60** sufficient to obtain a satisfactory electrical contact. The trailing portion of the bolt is threaded at **62***e*. The thread terminates in a flattened thread **62***f*. A nut **63** is threaded upon bolt portion **62***e* to effect locking and release respectively of the connecting mechanism in the manner described in connection with nut **55** of FIG. 12. Bolt **62** is preferably further extended to form a receiving terminal **62***g* for the conductor to be connected to conductor **60**.

A bolt as shown in FIG. 9 may also be used in connection with the structures shown in FIGS. 12 and 13.

The expansion anchor shown in FIGS. 14 and 15 utilizes the same principle as the anchor illustrated in the previously described figures, but is distinguished from the hereinbefore disclosed embodiments in respect to several structurally significant details. The anchor as shown in FIG. 14 comprises a bolt **70** having a cylindrical portion **71**, a conical portion **72** tapered inwardly in reference to cylindrical portion **71** and a threaded portion **73**.

The diametrically expandable member, shown in the previously described figures in the form of a coil, is changed to a sleeve **74**, preferably though not necessarily made of elastic metal. As can best be seen in FIG. 15, the sleeve is lengthwise slotted and terminates at one lengthwise edge in an inwardly bent tang **70***a* and along the other lengthwise edge in an outwardly bent tang **74***b*. The latter tang is preferably toothed or serrated for a purposed which will become readily apparent from the subsequent description. Sleeve **74** is fitted upon conical bolt portion **72**, lengthwise slidable in reference thereto. Tang **74***a* engages a lengthwise slot **75** of the bolt to prevent rotation of the sleeve in reference to the bolt. The length of the slot is such that the sleeve can move lengthwise in reference to the bolt.

The anchor further comprises a nut **76** threaded upon bolt portion **73** and a washer **77**. The washer has serrations **77***a* or other suitable surface deformations the friction of which causes the washer to function as a unidirectional washer to prevent accidental loosening of nut **76**.

The function of the anchor according to FIGS. 14 and 15 is generally obvious from the previous description. Assuming that the bolt is fitted in a mounting hole of a diameter such that the teeth of the outwardly bent tang **74***b* will bite into the wall material bolt **70** will be retracted in reference to sleeve **74** when nut **76** is tightened. As the result the outwardly tapered bolt portion **72** will force the sleeve apart, thus locking the anchor in its mounting hole. As previously described, the anchoring force is increased by a pull load acting upon the anchor.

To release the anchor, bolt **73** is turned in clockwise direction, for instance by inserting a screwdriver in screwdriver slot **73***a*. As has been previously described, such turning of the bolt in opposite direction will, in effect, rewind sleeve **74** so that the sleeve recovers its initial diameter.

FIGS. 16 and 17 also show an anchor comprising a diametrically expandable sleeve **80** as the locking member. Sleeve **80** of FIGS. 16 and 17 is lengthwise slotted and formed with an inwardly bent tang **80***a* along one of its lengthwise edges. The sleeve which may be die-cast, has on its outside a shallow, rather coarse, sharp-edged thread. The bolt with which sleeve **80** coacts may be the same as shown in FIG. 14. Accordingly, the same reference numerals are used. The inwardly bent tang **80***a* engages bolt slot **75**. The sleeve is fitted upon conical bolt portion **72** so that the narrow diameter of the inner wall of the sleeve is adjacent to cylindrical bolt portion **71**. As can best be seen in FIG. 17, the inner taper of sleeve **80** matches the taper of bolt portion **72** so that the sleeve cannot collapse toward the bolt. The structure thus acts in the manner of two counter-acting cones whereby the load acting upon the coil is substantially uniformly distributed. (See FIGS. 9 and 10.)

The function of the anchor according to FIGS. 16 and 17 is readily apparent. In this connection it may be mentioned that the uni-directional washer **77** of FIG. 14 may be used in connection with the anchor of FIG. 17.

The anchor according to FIGS. 18 and 19 is similar in principle to the anchor of FIG. 1. Bolt **85** has a cylindrical portion **86** and a conical portion **87**. A helically wound coil **88** is fitted upon conical bolt portion **87**. The coil terminates at one end in a wedge-shaped, bent out portion **88***a* and at the other end in a straight tang **88***b*. The tang engages a lengthwise slot **89** in cylindrical bolt portion **86**. Slot **89** serves to prevent rotation of the coil in reference to the bolt while permitting a lengthwise displacement of the coil in reference to conical bolt portion **87** in the same manner as slot **1***d* of FIG. 1. In addition, slot **89** serves the further purpose of impeding accidental loosening of the anchor due to shock or vibrations.

The general function of the anchor according to FIGS. 18 and 19 is evident from the previous description and it is also evident from the previous description that the anchoring force is supplied by diametrical expansion of the locking coil (or the locking sleeve). Under unfavorable operational conditions, such as heavy shocks or violent vibrations it may occur that the coil (or the sleeve), when it is made from springy wire, will snap back into its initial or relaxed condition, thereby upsetting the anchoring force. To counteract such tendency to snap back, slot **89** is circumferentially widened well beyond the width required to accommodate tang **88***b*. In addition, the radial depth of the slot increases toward the circumferential edge **89***a* thereof, as it is clearly shown in FIG. 19.

When the coil does snap back, it can do so by moving relative to the bolt within the limits provided by the circumferential width of slot **89** without upsetting the anchoring force. Furthermore, due to the greater depth of the slot at one edge the coil will tend to remain in its tight or locking position.

To counteract further a tendency of the coil to relax the anchoring force, conical bolt portion **87** is preferably knurled or otherwise roughened as it is indicated at **87***a*.

FIG. 20 shows by way of example a standard concrete reinforcing bar **95** terminating at one end or also at both ends in an anchor **96** as previously described for securing the reinforcing bar in a mounting hole. The anchor illustrated in FIG. 20 is similar to the anchor of FIG. 1 but as it is evident, other embodiments of the anchor can also be used. Operation is as described with reference to FIG. 5. The structure of the reinforcing bar is merely indicated by way of example. Other types of bars may also be used.

The main body of bar **95** may be embedded in a concrete section to which other concrete sections are to be joined by providing in such other sections a mounting hole into which is pushed the anchor portion **96** of the bar. Anchors according to FIG. 20 are particularly suitable for erecting so-called curtain walls formed of thin slabs. The joints produced by anchors **96** are capable of sustaining not only bending stresses, but also

tensile stresses, while conventional reinforcing rods can sustain bending stresses only.

FIG. 21 shows an anchor which is particularly suitable for tightly securing a plate member **100** to a support **101** made of comparatively soft material such as wood or plastic.

The anchor according to FIG. 21 comprises a bolt **102** having a cylindrical portion **102***a* terminating at one end in a slotted screwhead **102***b* and continued at its other end in a conical outwardly tapered portion **102***c*. A locking coil **103** is formed of thread-shaped wire of sufficient hardness such as a wire made of hard steel. The coil terminates at one end in an outwardly bent spade or wedge-shaped tip portion **103***a* and at the other end in a straight tang **103***b* extended into a slot **104** to hold the coil captive in reference to the bolt, as previously described.

When the anchor according to FIG. 21 is inserted into a mounting hole **101***a* (which may be oversized or undersized within reasonable limits) and the bolt is turned by inserting a suitable tool into screwhead **102***b*, the coil tip **103***a* will bite into the wall material and the coil threads will cut a thread into the wall material whereby the coil, by following the thread just cut, will climb upwardly on conical portion **102***c*, thereby expanding its diameter.

As it is now apparent, the expansion of the coil effected by retraction of the bolt in reference to the coil in the previously described exemplifications of the invention is produced with the anchor according to FIG. 21 by the coil pulling itself forward and upwardly in the thread cut by it. The entire operation requires about half a turn of the bolt.

If the anchor is to be used for instance in connection with a plastic housing, the anchor screw will seat itself and tighten up to hold plate **100** which may be the bottom plate of a housing against member **101** which may be a wall of the housing, thus making unnecessary the use of tapped fillets or inserts.

While the invention has been described in detail with respect to certain now preferred examples and embodiments of the invention, it will be understood by those skilled in the art after understanding the invention, that various changes and modifications may be made without departing from the spirit and scope of the invention, and it is intended, therefore, to cover all such changes and modifications in the appended claims.

What is claimed as new and desired to be secured by Letters Patent is:

1. An expansion anchor for locking in a mounting hole formed in a support member, said anchor comprising a bolt having a cylindrical portion and a tapered portion of circular cross-section outwardly tapered from the respective end of the cylindrical portion toward the respective end of the bolt, said cylindrical portion including a lengthwise recess in its outer wall, an elastic locking member in the form of a spirally wound wire encompassing said tapered portion and having a maximum inner diameter less than the maximum outer diameter of said tapered bolt portion and larger than the minimum outer diameter thereof, said locking member being radially expandible between a relaxed position of minimum inner diameter and a tensioned position of expanded inner diameter, one end of said locking member terminating in a bent-off tang engaging said recess lengthwise slidable therein in the relaxed position and also in the tensioned position of the locking member to hold said member rotationally captive on the bolt but lengthwise displaceable in reference thereto, said locking member upon insertion of the anchor into the mounting hole and retraction of the bolt in reference to the locking member being radially expanded by engagement with said tapered bolt portion whereby the locking member engages the hole wall along substantially the entire circumference of the locking member.

2. An expansion anchor according to claim 1 wherein the other end of said locking member is outwardly bent for gripping engagement with the wall of the mounting hole whereby upon insertion of the anchor into the mounting hole and turning of the bolt in one direction in reference to the locking member said locking member is diametrically expanded and upon turning of the bolt in opposite direction is diametrically contracted.

3. An anchor according to claim 2 wherein said other end of the locking member terminates in a sharpened edge.

4. An anchor according to claim 1 wherein said bolt comprises a chisel portion of substantially circular cross section contiguous of said outwardly tapered bolt portion and inwardly tapered toward its leading end, the wide end of the outwardly tapered bolt portion being set off by a shoulder from the wide end of the inwardly tapered bolt portion to form an abutment for the uppermost winding of said coil.

5. An anchor according to claim 4 wherein said chisel portion has lengthwise extending cutting ridges in its peripheral surface.

6. An anchor according to claim 5 wherein said outwardly slanted bolt portion is formed with lengthwise extending ribs.

7. An anchor according to claim 1 wherein said bolt has at its trailing end a mounting portion for securing a load to the anchor.

8. An anchor according to claim 1 wherein said bolt has at its trailing end a threaded portion, and a screw member is in threaded engagement with said threaded portion to effect retraction of the bolt in reference to the coil.

References Cited by the Examiner

UNITED STATES PATENTS

1,407,570	2/1922	Peirce	85—64
1,966,520	7/1934	Rayner	85—64
2,346,051	4/1944	Seamark	85—64
2,415,722	2/1947	Bauer	287—126
2,508,827	5/1950	Holden	285—8
2,690,693	10/1954	Campbell	85—64
2,745,457	5/1956	Lang	151—14
3,074,746	1/1963	Shames et al.	285—8
3,121,453	2/1964	Modrey	85—46

FOREIGN PATENTS

17,388	7/1914	Great Britain.
748,338	4/1956	Great Britain.

CARL W. TOMLIN, *Primary Examiner.*

R. S. BRITTS, *Assistant Examiner.*