Jan. 17, 1967 T. ROSETT 3,298,411

COMMINUTING APPARATUS

Filed June 2, 1964

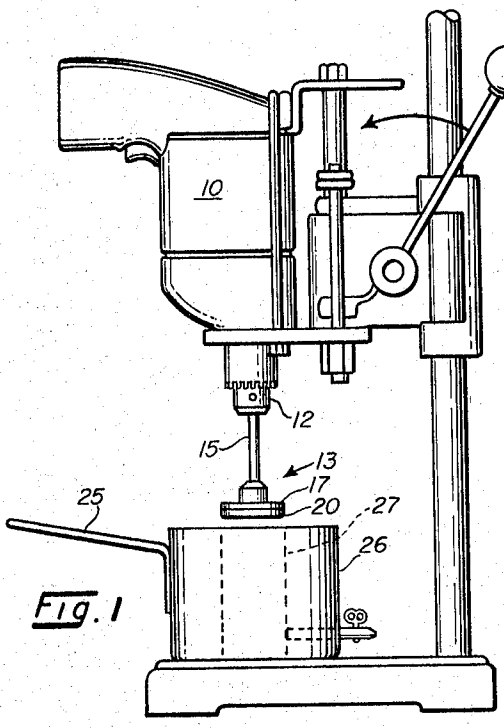

Fig. 1

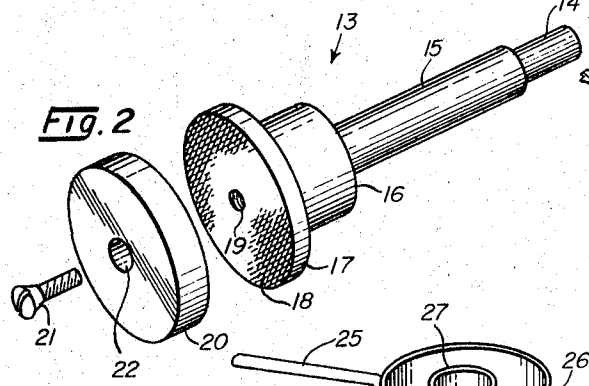

Fig. 2

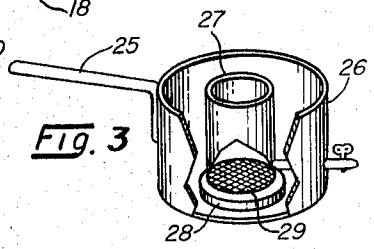

Fig. 3

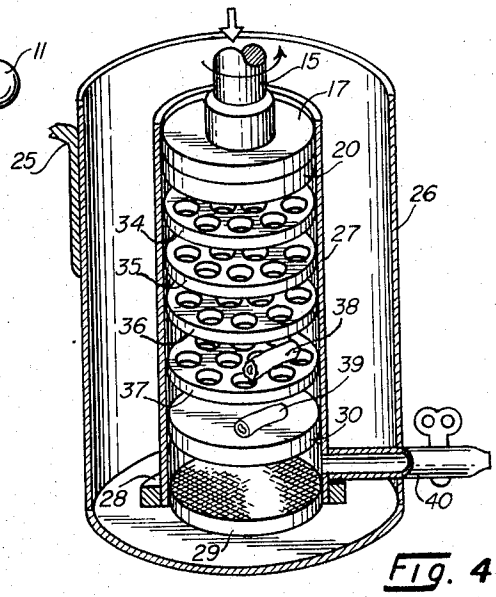

Fig. 4

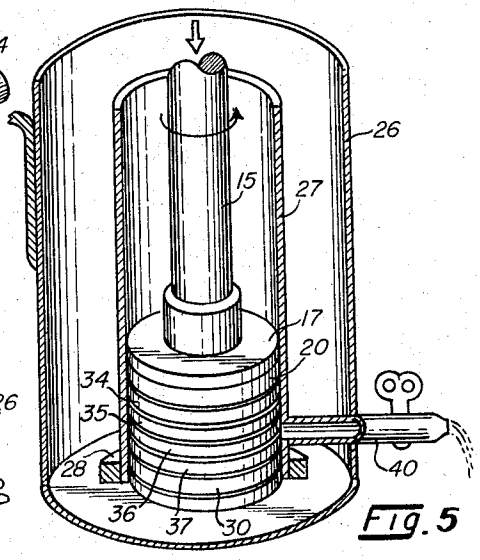

Fig. 5

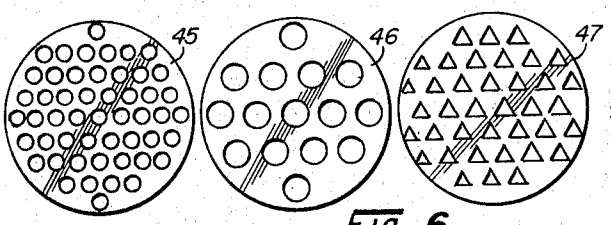

Fig. 6

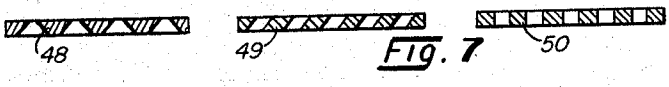

Fig. 7

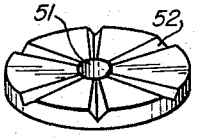

Fig. 8

INVENTOR.
Theodore Rosett

BY

B. B. Olive

ATTORNEY

United States Patent Office

3,298,411

Patented Jan. 17, 1967

1

3,298,411

COMMINUTING APPARATUS

Theodore Rosett, Durham, N.C., assignor to Duke University, Durham, N.C., a corporation of North Carolina

Filed June 2, 1964, Ser. No. 371,987
12 Claims. (Cl. 146—68)

This invention is broadly concerned with an apparatus for dividing materials into small particles by an action which may include aspects of breaking, cutting, grinding and pressing. The invention is particularly directed to an apparatus for dividing human and animal tissues into particles.

In various medical investigations, it becomes necessary to divide tissue specimens such as a section of unbilical cord until the specimen is broken down into its subcellular components. The subcellular components together with the liquid components of the specimen are ideally brought into a homogenized solution during the course of dividing the specimen. Prior art devices for this purpose have included the Waring Blendor type structure and mortar and pestle glass cone type structures both of which are found in practice to do damage to the subcellular components of the tissue specimens. This damage appears to arise from the tissue cells being subjected to an extensive abrading or grinding action between the parts of the prior art devices which disrupts the subcellular components, produces non-uniform particles and prevents the obtaining of the desired homogenous solution.

The present invention has therefore as a general object the provision of a novel apparatus for dividing materials and which is specifically adaptable to dividing tissue down to its subcellular components without disrupting such components.

Another object is to provide an apparatus for dividing tissue and producing therefrom a homogenized solution.

Another object is to provide an apparatus for dividing materials which enables free floating blades to be employed thereby eliminating the need for powering and interconnecting the blades.

Another object is to provide a laboratory apparatus for dividing tissue materials which can be easily disassembled and cleaned.

These and other objects will appear as the description proceeds, and in the drawings in which:

FIGURE 1 is a side elevation of a drill press adapted to practice the invention.

FIGURE 2 is a perspective assembly view of a spindle used in the invention with the drill press of FIGURE 1.

FIGURE 3 is a perspective of a receptacle used with the invention.

FIGURE 4 is an enlarged cutaway perspective of the receptacle of FIGURE 3 and showing the relative arrangement of the comminuting elements of the invention within the receptacle.

FIGURE 5 is similar to FIGURE 4 showing how the comminuting elements are pressed together during operation of the invention.

FIGURE 6 is a plan view of comminuting discs used in the invention and illustrating various forms which the disc perforations may take.

FIGURE 7 is a cross section elevation of comminuting disc perforations used in the invention and illustrating various cross section shapes that may be employed.

FIGURE 8 is a perspective view illustrating a comminuting disc surface adapted to perform a grinding effect.

Referring next to the drawings in which like numerals refer to similar parts in the various views, there is shown

2

in FIGURE 1 a typical bench drill press and stand generally indicated at **10**. Drill press **10** includes the usual operating lever **11** that moves as indicated by the arrow and which in turn causes the chuck **12** to move downwardly in the direction of its axis of rotation as the chuck rotates. It is this feature of being able to rotate and simultaneously move along the axis of rotation that makes drill press **10** particularly desirable for purposes of the invention.

Within chuck **12** there is fitted a special spindle indicated at **13**. Spindle **13** has a reduced size end **14** adapted to fit chuck **12**, a shaft body **15**, an enlarged shoulder **16** and a flange **17** all of which form the integral unit **13**. The face of flange **17** is preferably roughened as indicated at **18** and includes a tapped hole **19**. The roughened face **18** is covered by a friction pad indicated at **20** which is held to the flange **18** by means of a screw **21** which passes through hole **22** and is engaged with the tapped hole **19**. As will become more apparent from the later description, friction pad **20** acts as a rotating drive member for the comminuting action to be described. Pad **20** has several purposes one of which is to protect the surface of face **18** from being subject to wear. Another purpose served is that of providing a friction wear surface which produces relatively inert particles as it wears away. For the last purpose, pad **20** is preferably made of an inert material such as silicone rubber which gives both the desired friction effect and the desired wear qualities.

When applied to the problem of separating tissue, it has been found desirable to carry out the operation in a double receptacle pan such as that shown in the drawings which allows ice, cool water or other cooling medium to be held in the outer receptacle and applied to the inner receptacle in which the operation is actually being performed. As illustrated, the pan has a handle **25**, a main receptacle **26** for holding ice or the like, and a cylindrical inner receptacle **27** which is soldered with a liquid tight connection to the bottom of receptacle **26** by means of a collar **28** that surrounds receptacle **27** and is soldered to both receptacles. The bottom of inner receptacle **27** is roughened or otherwise made into a friction surface as indicated at **29** and to protect this surface there is provided a friction pad **30** which fits snugly within the wall of receptacle **27** and rests on the surface **29** during the comminuting operation. Pad **30** is similar to pad **20** in that both are intended to present friction wear surfaces which protect the surfaces each covers from wear and which also produce only inert particles as each wears away from use. Pad **30** also serves the purpose of retarding movement of any material to be divided or any disc, later described, which comes in contact with it. Accordingly, silicone rubber is preferably employed as a choice of material for pad **30**.

With the pan located below the drill press **10**, with spindle **13** installed and with pads **20** and **30** properly positioned, the receptacle **27** is ready to receive both the materials to be comminuted as well as the devices which effect the comminution. For this purpose, the invention provides for use of a plurality of discs as indicated at **34**, **35**, **36** and **37** in FIGURES 4 and 5. In the most commonly used form the discs are of steel metal and each is perforated with uniform circular holes that cover substantially the entire area of the disc. The diameter of the discs is such as to make them fit snugly against and in slidable engagement with the inside wall of the receptacle **27** while leaving them free to rotate around the axis of the receptacle. As shown in the drawings, the discs are loosely disposed in a relatively horizontal position and the material to be comminuted is placed either on top of the pad **30** or on top of the lowermost disc or in both

places, these positions being indicated by the umbilical cord tissue specimens at **38** and **39**.

In actual practice the loading operation is performed simply by dropping in the pad **30** which gives a friction surface at the base of the receptacle **27**, then dropping in a disc and if desired a piece of tissue specimen to be comminuted, then dropping in more of the specimen and another disc, then dropping in the remaining discs after which the main receptacle **26** is centrally located under the spindle **13**. Just prior to the comminuting operation it will be observed then that the discs and materials are loosely disposed in the receptacle **27** with the material being placed below selected ones of the discs. It is desirable to arrange the discs by hand so that they are relatively horizontal in the event they do not fall into such position when dropped in receptacle **27**.

To commence the actual comminuting operation, the drill press **10** is started which causes pad **20** to rotate and as handle **11** is moved, pad **20** comes into contact with the uppermost disc **34** and causes this disc to rotate. As handle **11** is continued in its movement, disc **34** will be brought in relatively tight but somewhat slipping engagement with the next uppermost disc **35** which will cause this last disc to also rotate but at somewhat lesser speed. Continued movement of handle **11** results in the remainder of the discs **36** and **37** coming into this same relatively tight but slipping engagement such that all of the discs will have relative rotation with respect to the discs to which each is adjacent. That is, even though there is no positive linkage between the discs they will be caused to rotate simply by being pressed together as shown by FIGURE 5. The bottommost disc **37** will have almost no rotation due to its engagement with pad **30**.

With the discs in rotation and the tissue material under pressure between the discs, the tissue is forced to find its way through the system so that there is somewhat of a combined pressing and cutting action that takes place. While difficult to observe a very limited degree of tearing or grinding probably also takes place however it has been found that this does not disrupt the subcellular components. The tissues will produce various liquids in the process of being divided. These liquids will keep the discs lubricated as they rotate and can be drawn off if desired through outlet **40**. It has been found desirable to stop the operation at times to observe the extent and condition of the divided tissue and the operation is stopped entirely when the required degree of division is obtained. As each type of tissue material will be found to have its own optimum requirements, the user of the invention should study the effect of different size holes, different shape holes and the like on the particular material with which he is concerned.

As indicative of the various forms which the discs may take, there is shown in FIGURE 6 an array of discs from which it will be seen that the perforations may take the form of small circular holes as at **45**, large circular holes as at **46** or triangular holes as at **47**. Each shape hole will have distinct comminuting characteristics on various materials so that the particular comminuting configuration employed will necessarily be adapted to the type of material being operated on, the degree and type of division required and the like. In the matter of variation, it has also been observed that the cross sectional shape of the hole will have some effect on the efficiency and characteristics of the invention. This is illustrated in FIGURE 7 in which **48** represents a frusto-conical shaped hole, **49** a sloping cylindrical hole and **50** a cylindrical hole having its axis perpendicular to the plane of the discs. A further variation is found in the surface effect as shown in FIGURE 8 in which a modified disc appears having only a single central hole **51** through which the material is forced to rise and a plurality of radially extending, triangular shaped channels **52**. This last mentioned disc when employed between the types of discs having an array of circular holes produces a type of grinding action on such fibrous tissues as become lodged between it and the disc immediately above.

From the description, the invention can be seen to reside from the viewpoint of apparatus in the provision of a cylindrical receptacle having a friction driving surface which engages a plurality of loosely mounted perforated discs residing within and snugly fitting in slidable engagement the wall of the receptacle, and having material placed between them, so as to cause these discs to rotate at differing speeds while pressing the discs together against a second relatively fixed friction surface, the comminuting action being effected by the materials being forced through and between the loosely mounted discs. From the viewpoint of method, the invention will be seen as involving the steps of placing the materials in a closed end cylinder, then placing loose perforated discs on the material, then driving the outermost disc and pressing it towards the closed end to effect comminution.

While particularly useful to medical laboratories with respect to which the invention provides a means of obtaining division of tissue without destroying the subcellular components, it is believed that the invention will also find application to more large scale apparatus and to dividing other materials particularly those of a fibrous nature. The words "comminuting," "comminution" and the like are therefore chosen for lack of better terminology to encompass dividing processes, whether by cutting, breaking, tearing, grinding or otherwise to the extent that these may be involved in practicing the invention.

Having described the invention, what I claim is:

1. A comminuting apparatus comprising, in combination, a cylindrical receptacle having an inside friction surface closing one end; a plurality of perforated discs of a predetermined comminuting configuration loosely mounted within said receptacle opposite said surface and snugly fitting the inside wall thereof, said discs being arranged substantially perpendicular to and being free to rotate with respect to and around the central axis of said receptacle; and means adapted to rotate the outermost of said discs with respect to said surface while moving said outermost disc toward said surface whereby to force together and cause rotation at varying speeds in others of said discs and to effect comminution of any material placed so as to be forced between at least a pair of said discs during said rotation.

2. A comminuting apparatus as claimed in claim **1** in which said comminuting configuration comprises circular holes penetrating said discs over subsetantially the whole area thereof.

3. A comminuting apparatus as claimed in claim **1** including drain means for said receptacle.

4. A comminuting apparatus as claimed in claim **1** in which said means comprises a driven shaft movable along said axis and mounting a friction surface engageable with said outermost disc to effect said rotation.

5. A comminuting apparatus as claimed in claim **1** in which said receptacle is vertically disposed and said discs are horizontally disposed.

6. A comminuting apparatus as claimed in claim **1** in which said means comprises a movable electric drill mounting a shaft movable along said axis and having a friction surface engageable with said outermost disc to effect said rotation.

7. A comminuting apparatus as claimed in claim **1** in which said comminuting configuration varies between different ones of said discs.

8. A comminuting apparatus as claimed in claim **1** in which said friction surface comprises a material which is relatively inert with respect to the material forced through said discs.

9. A comminuting apparatus comprising, in combination, a vertically disposed relatively fixed cylindrical receptacle having a closed end and a friction pad covering

said end; a plurality of perforated discs of a predetermined comminuting configuration loosely mounted within said receptacle opposite said pad and snugly fitting the inside wall thereof, said discs being arranged substantially perpendicular to and being free to rotate with respect to and around the central axis of said receptacle; a driven vertically disposed spindle mounted above said receptacle and adapted to be moved downwardly along said axis; a second friction pad fixedly mounted to and at the lower end of said spindle and rotating therewith, movement of said spindle downwardly causing said second pad to engage and rotate the outermost of said discs whereby to force together and cause rotation at varying speeds in others of said discs and to effect comminution of any material placed so as to be forced between at least a pair of said discs during said rotation, said pads each being comprised of an inert friction material.

10. An apparatus for comminuting tissue materials and the like comprising, in combination, a vertically disposed relatively fixed cylindrical receptacle having a closed end and a friction surface covering said end; a plurality of discs each having perforations of given comminuting configuration over substantially the whole area thereof and being loosely mounted within said receptacle opposite said surface and snugly fitting the inside wall thereof, said discs being arranged substantially perpendicular to and being free to rotate around the central axis of said receptacle, said materials normally being placed between the lowermost of said discs and said surface prior to

operating said apparatus; and vertically movable driven spindle means located above said receptacle and having a friction surface adapted to being engaged with the outermost of said discs while being moved toward said end surface whereby to force together and cause rotation at varying speeds in others of said discs and thereby effect comminution of said tissue materials by forcing the same between said discs during said rotation.

11. An apparatus for comminuting tissue as claimed in claim **10** wherein both said end friction surface and said spindle friction surface are comprised of a material inert to said tissue materials.

12. An apparatus for comminuting tissue as claimed in claim **11** in which said vertically movable driven spindle means comprises an electric drill spindle mounted above said receptacle.

References Cited by the Examiner

UNITED STATES PATENTS

1,074,397	9/1913	Westby.	
2,843,169	7/1958	Stein	146—68
3,221,788	12/1965	Hughes	146—192 X

FOREIGN PATENTS

1,306,039	9/1962	France.

WILLIAM W. DYER, JR., *Primary Examiner.*

W. GRAYDON ABERCROMBIE, *Examiner.*