Dec. 20, 1966 M. J. BLUME 3,293,632

REVERSIBLE WALL PANEL

Filed March 20, 1964

FIG. 5

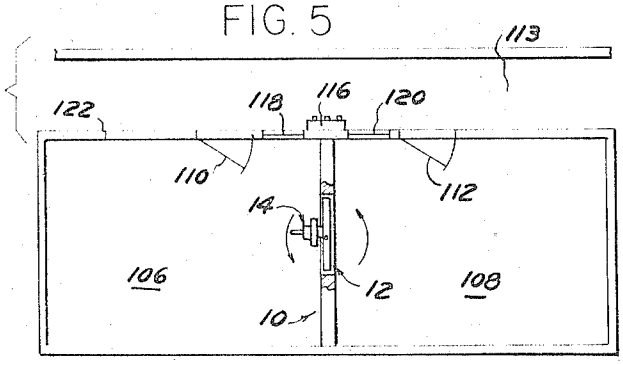

FIG. 1

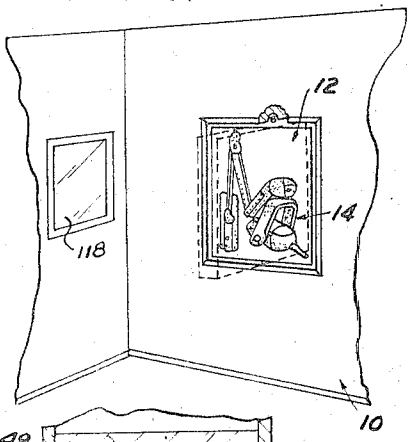

FIG. 6

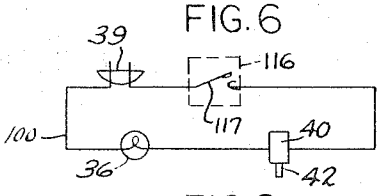

FIG. 2

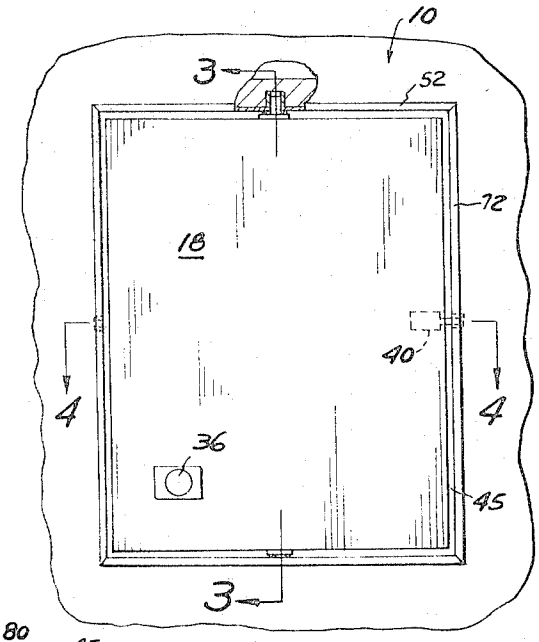

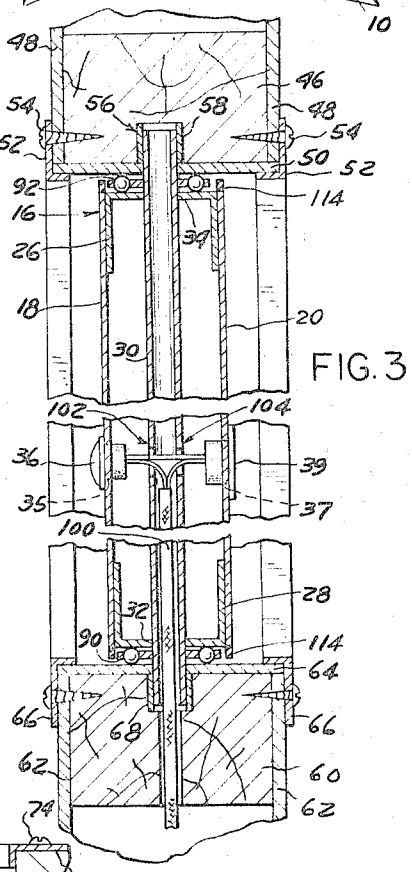

FIG. 3

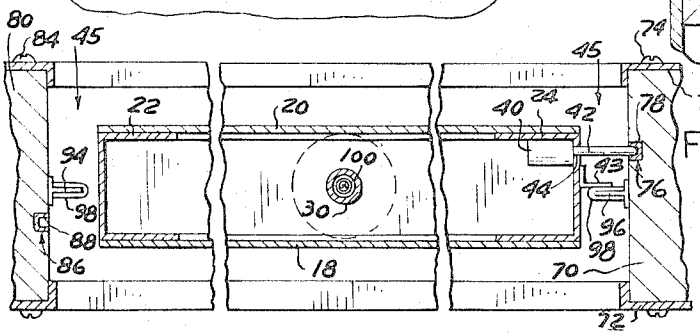

FIG. 4

INVENTOR.
MICHAEL J. BLUME
BY
ATTORNEY

United States Patent Office

3,293,632

Patented Dec. 20, 1966

1

3,293,632
REVERSIBLE WALL PANEL

Michael J. Blume, 15638 Stratford, Southfield, Mich. 48075

Filed Mar. 20, 1964, Ser. No. 353,624
8 Claims. (Cl. 340—282)

This invention relates to wall systems and more particularly has reference to a wall panel for X-ray apparatus and the like adapted to pivot between a pair of adjoining rooms in order to provide access to the X-ray equipment from either room.

In hospitals, X-ray clinics, dental offices, and the like, it is common to have several rooms suitably equipped for X-ray exposure of patients. These rooms are often situated immediately adjacent one another. It is often necessary in X-ray clinics and hospitals, to provide an independent, complete X-ray system in each room since more than one patient may be given X-ray treatment at the same time. Many dentists have a pair of adjoining operatories between which they alternate during the course of a day. In order to take X-rays regardless of the room in which the patient happens to be disposed, it has been necessary to mount a separate X-ray unit in each room.

The actual period of exposure to the X-radiation, usually only a few seconds, is a small part of the total time the patient spends in the room where the X-ray is taken. In the dental operatory, for example, the X-rays may be taken in a few seconds or minutes while the patient may spend an hour or more in the room receiving dental treatment. It is apparent, therefore, that while more than one room having access to the X-ray equipment may be necessary, a single X-ray unit might be sufficient if it were available in each room for a little more than the few seconds or minutes during which the exposure is made.

The problem, therefore, is to provide an X-ray system which can be readily and swiftly moved from one room to another. The only obvious solution to this problem would be to mount the X-ray unit on a cart or other vehicle which could be wheeled from one room to another. However, this would be impossible for many types of X-ray equipment and, in any case, would clearly be slow, inconvenient, and therefore unsatisfactory, where more than one patient is brought into one of the rooms at about the same time.

It is the primary object of the present invention to provide a solution to this problem where a pair of such X-ray rooms or dental operatories are disposed adjacent one another and have a common wall or partition. The present solution is to rotate the portion of the common wall on which the X-ray unit is mounted until the unit is disposed in the room where the unit is to be used. The wall section is rotated each time the unit is needed in the room opposite to the one in which it is disposed at the time.

In a preferred embodiment of the invention which will be subsequently described in detail, a dental X-ray unit is fixed on a rotatable wall panel which is pivotable about a vertical axis. When the X-ray apparatus is in use, a switch is actuated which locks the panel against movement, and illuminates a small light on the rear side of the panel. This serves as a signal to the operator on that side of the panel that the dental X-ray apparatus is being used. Suitable rubber padding is provided about the periphery of the panel adapted to prevent noise from being transmitted from one room to the other through the small space between the panel and the wall structure.

It can be seen that the present reversible wall system will not interfere with the normal operations in each of the two serviced rooms nor increase the time required to obtain an X-ray exposure. In each room, the wall panel

2

is rotated to bring the X-ray apparatus into the room if it is not already there. The apparatus is then arranged adjacent the portion of the patient's body to be X-rayed, and the exposure completed. The entire time during which the apparatus is unavailable to the operator on the opposite side of the wall will ordinarily be a matter of a few seconds or minutes.

The control console or panel which actuates the X-ray apparatus may be located on the reversible wall panel or it may be situated externally on that wall. For example, the control console may be located in a hallway accessible from both serviced rooms and having means for viewing the patients in both rooms. One such floor plan will be subsequently illustrated and described in greater detail.

The present invention provides a substantial saving in cost since only half as many X-ray machines are necessary. The cost of providing an existing wall with a reversible panel of this kind or of providing a new wall having such a feature, is very small in comparison to the cost of a complete X-ray unit.

Although the greater portion of the present discussion is concerned with reversible panels for X-ray systems, it can be readily seen that the same principle may be employed in various other situations where apparatus is used periodically in each of two adjoining rooms. For example a dictating machine might be wall-mounted in this manner in an office so as to be pivotable between one room where the dictation is recorded on the machine, and a second room where the recorded information is to be transcribed. This would permit a single machine to be employed for both purposes, thereby saving the cost of a duplicate machine or avoiding the inconvenience of carrying or wheeling single machine back and forth.

Other objects and advantages of the present invention will be more readily apparent from the following detailed description of a preferred embodiment thereof. The description makes reference to the drawing in which:

FIGURE 1 is a perspective view of a portion of the wall including a dental X-ray unit mounted on the reversible panel of the present invention, the panel being also shown in phantom rotated ninety degrees from its normal position;

FIGURE 2 is a rear elevational view of the panel of FIGURE 1;

FIGURE 3 is a cross-sectional view of the panel taken along the lines 3—3 in FIGURE 2 without the X-ray unit;

FIGURE 4 is a cross-sectional view of the panel taken along the lines 4—4 in FIGURE 2 without the X-ray unit;

FIGURE 5 is a floor plan of a suggested arrangement of the adjoining rooms and the X-ray control console; and

FIGURE 6 is a schematic representation of a preferred electrical system for the apparatus of the present invention.

Referring to the drawing in detail, a pair of dental operatories are separated by the common wall **10** shown in FIGURE 1. A panel **12**, constructed in accordance with the present invention, is disposed in the wall **10** and includes a dental X-ray unit **14** mounted along one face.

The panel **12** includes an outer frame **16** and facing sheets **18** and **20** of metal, wood, plastic, or any other suitable material. The frame **16** comprises vertical side channels **22** and **24**, and horizontal upper and lower channels **26** and **28**. The facing sheets **18** and **20** are permanently fixed to the opposite outer legs of the channels **22–28**. A hollow shaft **30** extends vertically through the panel and is welded in holes **32** and **34** midway along the length of the lower and upper channels **28** and **26**. The thickness of the panel is less than that of the wall **10**.

The panel **12** includes a pair of substantially aligned openings **35** and **37** in the facing sheets **18** and **20**. A

small lamp **36** is mounted over the opening **35** on the outer face of sheet **18**. An electrical outlet, indicated at **39**, is mounted over the opening **37**.

A solenoid **40** is mounted inside the panel **12** adjacent the facing sheet **20** and vertical side channel **24**. The solenoid includes a rod **42** which retractably projects through a horizontal opening **44** in the channel **24**. An angle member **43** projects outwardly along the outer face of the channel **24**.

FIGURES 3 and 4 show the wall mounting system for the panel described above. The wall is prepared by first removing enough of the plaster walls or dry wall and studs to provide an opening **45** slightly larger than the panel to be inserted. A beam **46**, such as a 2 x 4, is placed between the lower ends of the existing plaster walls or dry wall **48** with its lower face flush with the ends of the walls **48**. The beam **46** extends between the existing studs in the wall. A horizontal plate **50** is retained against the beam **46** and the ends of the walls **48** by means of a pair of angles **52** which are suitably bolted at **54** to the dry wall. The beam **46** includes a vertical hole **56** along part of which a short section of metal tubing **58** is adapted to receive interiorly the upper projecting end of the hollow shaft **30**; the shaft **30** is then free to rotate within the tubing. Alternatively, a ball bearing or other suitable bearing could be provided in place of the tubing **58**.

At the lower end of the opening **45** is wall **10**, a beam **60** is similarly mounted between the edges of the existing dry wall **62** with a plate **64**, angles **66**, and tubing **68**. The latter members are disposed in the wall in the same manner as members **50–58** at the upper end of the opening **45**. The tubing **68** receives the lower projecting end of the shaft **30**.

In this manner, the entire panel **12** is free to rotate about a vertical axis passing through the hollow shaft **30**.

As shown in FIGURE 4, a beam **70** is provided between a pair of angle members **72** along one vertical side of the opening **45** in the wall **10**. Small bolts or nails **74** fix the beam **70** in place between the angle members **72**. If the opening **45** in the wall is adjacent an existing stud, the stud will replace the beam **70**. A small bore **76** having a small metal socket **78** therein is provided along the beam **70** to accommodate the rod **42** of the solenoid **40**.

The opposite vertical side of the opening **45** is identical to that just described, having a beam **80** mounted between the dry wall with nails **84** and provided with a bore **86** fitted with a socket **88**. This latter socket accommodates the solenoid rod **42** when the panel is reversed with the channel **22** adjacent the beam **80**.

The panel **12** is mounted in the opening **45** as shown in FIGURES 3 and 4. Self-lubricating thrust and guide bearings **90** and **92** are provided respectively along the shafts **30** and **32** between the channels **28** and **26** and the plates **64** and **50**. This permits the entire panel **12** to easily rotate about the vertical axis extending through the shaft **30**.

Stops **94** and **96** extend along each of the vertical beams **70** and **80** and are each covered with a layer **98** of rubber, plastic, or similar resilient material. The stops serve to limit the rotational movement of the panel **12** to 180 degrees. The angle member **43** abuts the stop **94** when the panel is positioned with the channel **24** disposed adjacent the beam **80**, and abuts the stop **96** when the panel is rotated 180 degrees so that the channel **24** is adjacent the beam **70**.

The dental X-ray unit **14** is mounted on the face **20** of the panel **12** with suitable brackets (not shown). A flexible power supply cable **100** for the X-ray unit **14** extends upwardly through the hollow shaft **30** and as can best be seen in FIGS. 3 and 6, is electrically connected in series to the lamp **36** and outlet **39** through the openings **35** and **37** in the sheets **18** and **20**, and through corresponding openings **102** and **104** in the shaft **30**. Additional series circuitry connects the cable **100** to the solenoid **40**. The X-ray unit control **116** including a switch **117** is also connected in series with the outlet **39** so that closing the actuating switch **117** of the X-ray unit control **116** permits current to flow through the lamp **36**, solenoid **40**, and X-ray unit **14**. When the solenoid **40** is thus actuated, the rod **42** is advanced into the adjacent socket **78** or **88**. The lamp **36** is illuminated by this current flow, thereby indicating to the operator at the rear side **18** of the panel that the X-ray unit is being used.

In operation, the dentist or operator rotates the panel **12**, if necessary, to position the X-ray unit **14** in the room in which the patient is seated. The X-ray unit control is actuated, thereby locking the solenoid rod **42** in place in the adjacent socket **78** or **88**, and illuminating the lamp **36** on the opposite side of the panel **12**. This will serve as a warning to the operator or dentist in the adjoining room that the X-ray unit is being used at that moment. Even if he should inadvertently fail to notice the lamp, the solenoid rod **42** will prevent rotation of the panel **12**.

After the exposure is completed, the X-ray unit control switch **117** is again opened, thereby unlocking the rod **42** and turning off the lamp **36**. The operator in the adjoining room can then rotate the panel 180 degrees to bring the X-ray unit **14** into that room.

Since the exposure time is ordinarily very short, the panel will be locked against rotation only for a very brief period. This means the operator in the adjoining room need wait only for a few seconds or minutes, if at all.

FIGURE 5 shows a floor plan illustrating a suggested layout for a pair of adjoining operatories **106** and **108** serviced by the present invention. The rotatable panel **12** and its dental X-ray unit **14** are mounted in the common wall **10**. Each room includes a door **110** and **112** which permits access to a hall **114** which extends past both rooms.

The X-ray unit control **116** is located in the hall **114** in alignment with the wall **10**. A pair of windows or openings **118** and **120** are provided in the wall **122** intermediate the doors **110** and **112** and permit the operator of the control **116** to observe the interior of either of the rooms **106** or **108**. This permits the operator in either of the rooms **106** or **108** to actuate the X-ray unit from a safe distance while observing the patient. If desired, the control **116** may be located in such a manner that the operator can observe the patient in each room through the two doorways.

X-ray equipment generally comprises a wall mounted section, and a head disposed at the end of an extension arm which may be adjusted to properly place the head adjacent the patient. In such a case, the reversible panel need only be as large as the unit with the head and arm in retracted position against the mounted section. If necessary, suitable means might be provided for preventing the electrical circuit in the panel or the solenoid **40** from being deactuated while the X-ray unit is in an extended position.

If desirable, a suitable lead lining may be provided through the wall **10**, panel **12**, and along the stops **94** and **96**. This would effectively prevent any radiation from passing through any portion of the finished wall.

It can be seen from the above description that the panel **12** can be easily fabricated as a unit using large scale production techniques. The opening in the existing or newly constructed wall, along with its assorted structural members, may be provided at a very low cost. Once the wall **10** has been prepared in this manner, the factory-constructed panel can be installed in a few minutes. It is understood that the various architectural and structural components shown in the drawing many be changed or modified as required.

Although the present invention has been described as

providing a method of gaining access to a wall-mounted X-ray unit from either of two adjoining rooms, it can be seen that the same panel structure could be used to provide access in a similar manner to any wall-mounted apparatus. The dimensions of the panel must be greater than those of the apparatus to permit the apparatus to clear the sides of the opening in the wall as the panel is pivoted. The apparatus may be capable of being retracted to a relatively compact condition when not in use as described above with respect to conventional X-ray equipment, thereby permitting a small panel to be used.

If desired, the panel **12** may be reversed automatically rather than manually. This could easily be accomplished by providing a power source such as a motor, and suitable connecting means for rotating shaft **30**.

To reduce the noise transmitted from one of the adjoining rooms to the other through the space between the panel and the wall **10**, flexible and/or rigid types of seals can be provided. In the present preferred embodiment of the invention, this takes the form of thick soft rubber padding **114** mounted around the bearings **90** and **92**. The padding **114** may be thick enough to be normally compressed between the sides of the panel and the adjacent wall structure.

The panel **12** shown in the drawings may be provided with suitable trim or decoration as desired in order to improve the appearance of the entire wall. Similarly, any type of finish may be applied to the panel **12**. If the apparatus mounted on the wall has considerable weight, the panel may be provided with additional structural reinforcing and larger thrust and guide bearings.

It will be apparent to those skilled in the art to which this invention pertains, that various changes or modifications in the construction of the component parts may be made without departing from the spirit of the invention, or from the scope of the appended claims:

Having thus described my invention, I claim:

1. A system for providing access to X-ray apparatus from either of two adjoining rooms, comprising

(a) a panel disposed in an opening in the common wall between said rooms and an X-ray apparatus mounted to said panel,

(b) means for reversing said panel with respect to said wall so as to vary said X-ray apparatus between two positions, each position exposing said X-ray apparatus to a different one of said two rooms,

(c) means for electrically actuating said X-ray apparatus and means electrically connected with said actuating means and operable to lock said panel to said wall and against rotation in response to energization of said actuating means whereby to lock said X-ray apparatus in one of said two rooms during use.

2. The system as defined in claim **1** and including indicating means electrically connected with said actuating means and operable to provide an indication in the opposite room when the X-ray unit is in use in one of the rooms.

3. The structure set forth in claim **1** wherein said panel

comprises an outer frame, and facing sheets fixed to opposite sides of said frame, said apparatus being mounted on one of said facing sheets.

4. The system as defined in claim **1** and in which said reversing means comprises,

(a) means for supporting said panel pivotably in said wall about a vertical axis in the plane of said panel, and

(b) said supporting means including bearing means along said vertical axis between said panel and said wall.

5. The structure set forth in claim **4** and including a power cable for said X-ray apparatus extending along said vertical axis and through said bearing means.

6. A system for providing access to a piece of apparatus from either of two adjoining rooms comprising

(a) a panel disposed in an opening in the common wall between said rooms and an apparatus mounted to said panel,

(b) means for reversing said panel with respect to said wall so as to vary said apparatus between two positions, each position exposing said apparatus to a different one of said two rooms,

(c) means electrically actuating said apparatus and means electrically connected with said actuating means and operable to lock said panel to said wall and against rotation in response to energization of said actuating means whereby to lock said apparatus in one of said two rooms during use.

7. The system as defined in claim **6** and including indicating means electrically connected with said actuating means and operable to provide an indication in the opposite room when the apparatus is in use in one of the rooms.

8. A system for providing access to X-ray apparatus from either of two adjoining rooms, comprising

(a) a panel disposed in an opening in the common wall between said rooms and an X-ray apparatus mounted to said panel,

(b) means for reversing said panel with respect to said wall so as to vary said X-ray apparatus between two positions, each position exposing said X-ray apparatus to a different one of said two rooms,

(c) means for electrically actuating said X-ray apparatus and indicating means electrically connected with said actuating means and operable to provide an indication in the opposite room when the X-ray unit is in use in one of the rooms.

References Cited by the Examiner

UNITED STATES PATENTS

825,840	7/1906	James	52—32
854,171	5/1907	Merrill	52—32
2,019,362	10/1935	Schwitzer	250—92 X

NEIL C. READ, *Primary Examiner.*

R. M. GOLDMAN, *Assistant Examiner.*