DISPLAY CABINET

Filed April 9, 1964 2 Sheets-Sheet 1

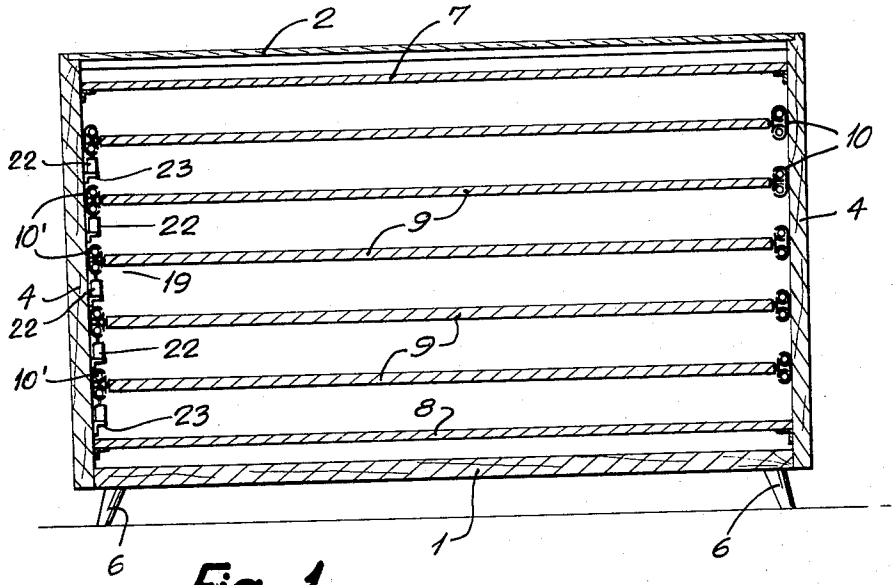

Fig. 1

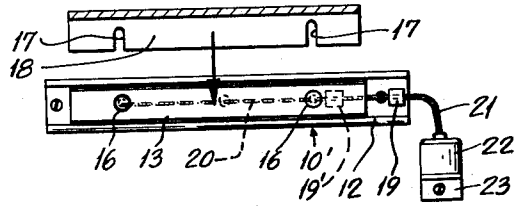

Fig. 3

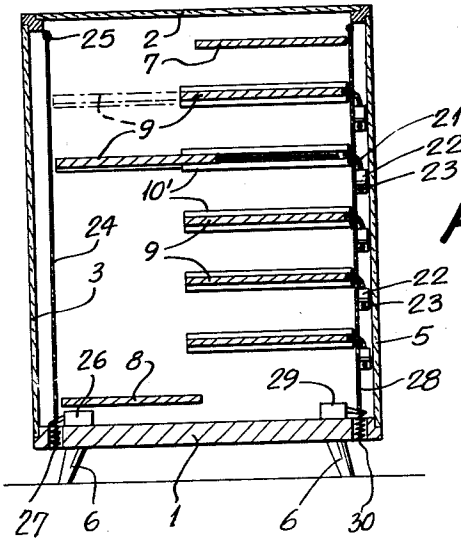

Fig. 2

INVENTORS
Marcel LAVIGNE
André LORENZETTI
BY
Pierre Lespérance
PATENT AGENT

DISPLAY CABINET

Filed April 9, 1964 2 Sheets-Sheet 2

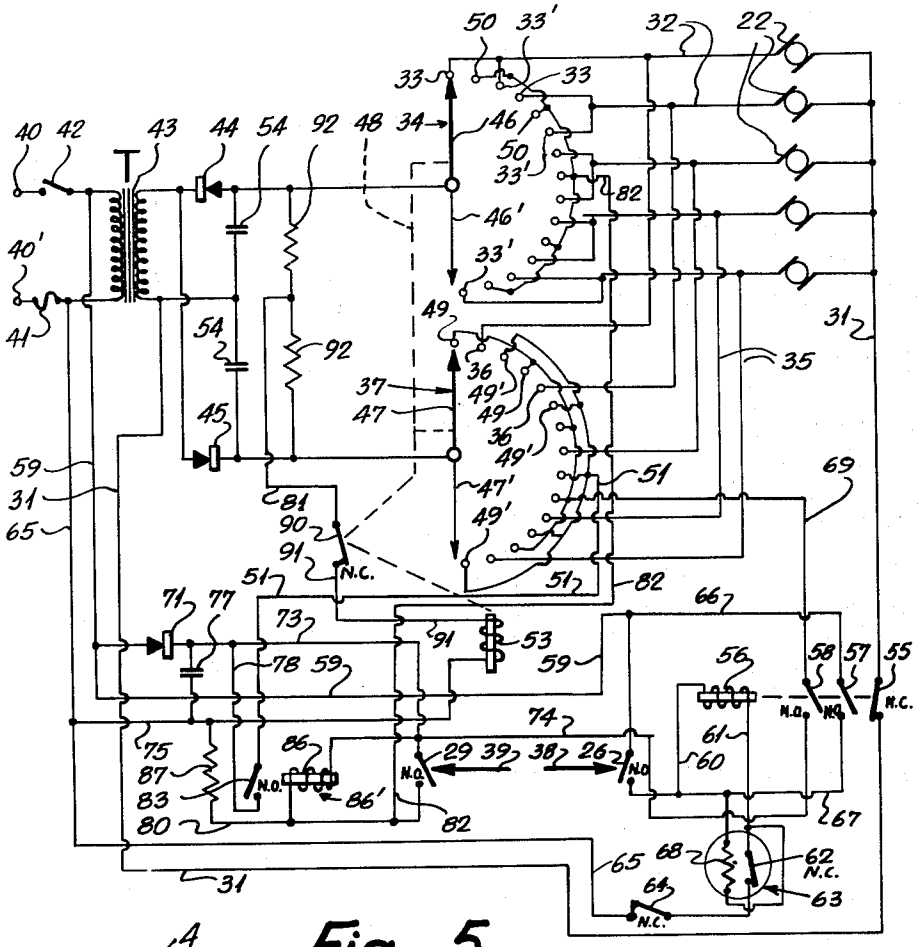

Fig. 4

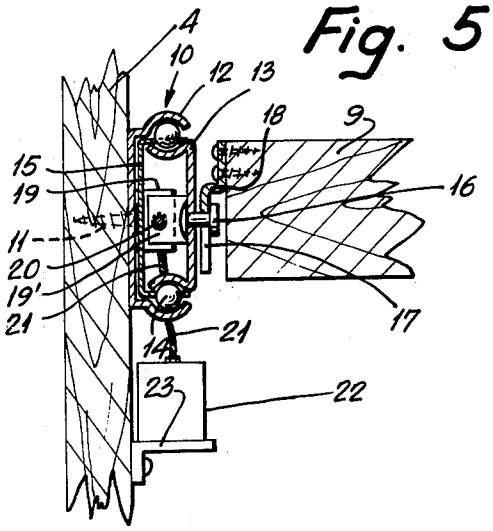

Fig. 5

INVENTORS
Marcel LAVIGNE
André LORENZETTI
BY
Pierre Espérance
PATENT AGENT

United States Patent Office

3,259,443

Patented July 5, 1966

1

3,259,443
DISPLAY CABINET

Marcel Lavigne, 1565 Beaugrand St., Montreal 5, Quebec, Canada, and Andre Lorenzetti, Pointe aux Trembles, Quebec, Canada (9400 Centrale St., La Salle, Quebec, Canada)

Filed Apr. 9, 1964, Ser. No. 358,427
7 Claims. (Cl. 312—126)

The present invention relates to display cabinets for use in stores and the like places for displaying articles for sale, such as jewelry and the like.

The general object of the present invention resides in the provision of a display cabinet of the character described, in which the articles are displayed in an attractive manner conducive to increase in sales and in which a maximum of articles relative to the size of the cabinet may be displayed in full view.

Another object of the present invention resides in the provision of a display cabinet of the character described, characterized by the fact that the articles for sale are carried by a plurality of superposed shelves or trays, which are arranged for horizontal movement within the cabinet between a back retracted position and a front article displaying position, said shelves being controlled by automatic electric circuit means so as to move the shelves in succession between said two positions, such that the articles of each shelf are successively brought into full view of the prospective customer.

Another object of the present invention resides in the provision of a display cabinet of the character described, which is conveniently made into the size of a conventional store counter.

Yet another object of the present invention resides in the provision of simple electric circuit means for actuating the shelves in the order desired.

The foregoing and other objects of the present invention will become more apparent during the following disclosure and by referring to the drawings, in which:

FIGURE 1 is a longitudinal section of the display cabinet;

FIGURE 2 is a cross-section of the same;

FIGURE 3 is a partial elevation of the motorized rail means and a section of a shelf bracket showing how the shelf is removably supported by the rail means;

FIGURE 4 is a schema of the electric circuit associated with the display cabinet; and

FIGURE 5 is a section on an enlarged scale of one end of a shelf and rail means, and showing the motor means for moving the shelf.

Referring now more particularly to the drawings in which like reference characters indicate like elements throughout, the display cabinet in accordance with the invention comprises a box-like enclosure, preferably of the size and height of a store counter and consisting of a bottom **1**, a transparent top **2**, transparent front wall **3**, side walls **4**, and a back wall **5** which is provided with doors for gaining access to the interior of the cabinet. The cabinet is supported by ground-engaging legs **6**.

Stationary top and bottom shelves **7** and **8** respectively are mounted within the cabinet immediately below the top **2** and above the bottom **1** respectively. Top shelf **7** and bottom shelf **8** each has a width equal to approximately half the depth of the cabinet, and top shelf **7** is disposed adjacent to back wall **5**, while bottom shelf **8** is disposed adjacent front wall **3**.

A plurality of movable shelves **9**, each having a width approximately equal to half the depth of the display cabinet, are superposed and mounted between the top and bottom shelves **7** and **8** respectively. Each shelf **9** is movably mounted for horizontal movement between a normal retracted position adjacent the back wall **5**, as shown in

2

FIGURE 2, and an advanced article display position adjacent the front wall **3** of the cabinet, as shown by the second shelf **9** in FIGURE 2. Moreover, means are provided for automatically and successively moving the shelves **9** between their two positions, such that each shelf will successively accomplish its forward and return movement before the next shelf accomplishes the same movement, a succession of such movements being made preferably from the top to the bottom of the display cabinet and after the lowermost shelf **9** has accomplished its to and fro movement, the cycle is repeated with the topmost movable shelf **9**.

Preferably, also, the electric circuit means provide delay means such that a shelf in display position will remain so for a few seconds to leave time for the viewer to fully see the articles displayed on the shelf. Articles on the top and bottom stationary shelves **7** and **8** are displayed in a permanent manner.

Each shelf **9** is removably attached at both ends to an extensible guiding rail, **10** and **10'** respectively, and of conventional construction, each guiding rail **10, 10'** being secured to the side wall **4** by screws **11** or the like. Each guiding rail **10, 10'** preferably consists of a stationary outer channel element **12** extending the full width of the associated shelf **9** and of an inner channel element **13**, of approximately the same length and fitted within channel **12** and in guiding and rolling engagement within said channel **12** by the interposition of ball bearings **14** maintained in proper position by a cage element **15**. The inner channel element **13** is provided with spaced studs **16** removably engaging downwardly opening notches **17** made in a bracket member **18** secured to the end of shelf **9**, as shown in FIGURE 5. Thus, the shelf can be lifted out of engagement with the studs **16** for replacing the shelf, whenever desired, as shown in FIGURE 3.

Guiding rail **10'** at one end of shelf **9** is motorized. A bored block **19** is secured to the back end of outer channel **12** and serves to rotatably support a screw **20**, extending longitudinally within outer channel **12**, the outer end thereof being secured to a flexible shaft **21**, in turn connected at its outer end to the output shaft of a reversible D.C. electric motor **22** supported on a bracket **23** secured to side wall **4**.

Screw **20** is screwed within a second bored block **19'**, which is firmly secured to inner channel **13**, whereby rotation of screw **20** by motor **22** will cause displacement of inner channel **13** with respect to the outer channel and, consequently, advancing or retracting movement of the shelf **9** supported by the two guiding rails **10, 10'**. Preferably, the speed ratio between motor **22** and inner channel **13** is such that a one-inch displacement of channel **13** will be caused by about thirty-two turns of the motor shaft. Each shelf **9** is provided with an individual driving motor **22**, which is of low power rating due to the fact that the rails **10, 10'** provide for frictionless horizontal movement of the shelf.

Each shelf **9**, upon reaching its advanced position, abuts against a common string **24** attached at its upper end at **25** inside the cabinet near one front corner thereof, while the lower end of the string **24** is attached to the operating lever of a micro switch **26** mounted in the bottom of the cabinet. The lower end of the string **24** is also attached to a tension spring **27** for normally maintaining the string **24** in taut condition. Similarly, when each shelf **9** reaches its back limit position, it abuts against a string **28** operating a micro switch **29**, string **28** being maintained taut by a spring **30**.

The shelves **9** are positively driven in an alternating or oscillating movement between back retracted position and front display position, by their reversible electric motors **22** and under the control of an electric circuit which is shown in FIGURE 4.

In this circuit, there are shown five reversible D.C. electric motors 22, one for each shelf 9; but, obviously, the number of electric motors 22 and shelves 9 in the display cabinet can be increased or decreased.

One terminal of each motor 22 is connected to a common wire 31, while the other terminal of each motor is connected by wire 32 to a pair of spaced contacts 33, 33′ of a rotary stepping switch 34 and by wires 35 to contact 36 of a rotary stepping switch 37. Obviously, said stepping switches 34, 37 have contacts 33, 33′, and 36 in a number corresponding to the number of motors 22. The remaining portions of the circuit will be common to all the reversible motors 22.

In said circuit, the front micro switch 26 and back micro switch 29 are normally open switches and are adapted to be closed when the associated strings 24 and 28 respectively are engaged by the leading edge of a moving shelf, as indicated by the arrows 38 and 39. The circuit has supply wires 40, 40′ connected to a supply of alternating current of, say, 110 volts, one wire 40′ having a fuse 41, and the other wire 40 a manually-operated switch 42 for closing the circuit. Both wires are connected to the primary of a stepped down transformer 43. One terminal of the secondary of transformer 43 is conected in parallel to the terminals of opposite polarities of silicon rectifiers 44 and 45 respectively, said rectifiers being in turn connected to the rotary stepping contact arms 46 and 47 respectively, of the pair of rotary stepping switches 34 and 37.

The arms 46 and 47 are connected on a common shaft, shown schematically at 48, which is operated step by step in conventional manner by the coil 53 of the stepping switch arrangement. The contacts 36 of stepping switch 37 are offset relative to contacts 33, 33′ of switch 34, such that when contact arm 46 closes the circuit to a contact 33 of stepping switch 34, as shown in FIGURE 4, the contact arm 47 of the other stepping switch 37 will take a neutral position 49 or 49′, and inversely when arm 47 closes the circuit to a contact 36, arm 46 will then take a neutral position 50. Thus, the motors 22 are fed with rectified current of one polarity through rectifier 44 and current of the opposite polarity through rectifier 45, so as to move the associated shelf 9 forwardly or rearwardly.

FIGURE 4 shows the contact arms 46 and 47 of the stepping switches 34 and 37 in initial position, engaging the first contacts 33 and 49 of the series of fifteen contacts for each stepping switch.

Referring to stepping switch 34, it will be seen that first motor 22 is connected to first and third contacts. The second motor 22 is connected to the 4th and 6th contacts, and so on. 2nd, 5th, 8th, 11th, and 14th contacts are neutral and noted by reference numeral 50.

Concerning rotary switch 37, the first motor 22 is connected to the second contact; the second motor 22 is connected to the fifth contact; the third motor to the eighth contact; the fourth motor to the eleventh contact, and the fifth motor to the fourteenth contact.

Neutral contacts 49 are in the following order: 1st, 4th, 7th, 10th, 13th. Additional neutral contacts 49′ are in the following order: 3rd, 6th, 9th, 12th, and 15th. Contacts 49′ are connected to a common wire 51.

The outputs of rectifiers 44 and 45 are connected in parallel to the other terminal of the transformer secondary through condensers 54 to filter pulses of D.C. current and store current to assist in starting motors 22. Common wire 31 is also connected to the other terminal of the transformer secondary through normally closed contact 55, which is part of a solenoid-operated three-contact relay, generally indicated at 56, the remaining two contacts 57 and 58 being normally open and mechanically connected to contact 55.

The solenoid of relay 56 is fed with 110-volt alternating current by wire 59, switch 26, wire 60, the solenoid of relay 56, wire 61, contact 62 of normally closed thermal switch 63, normally closed manual switch 64 and wire 65, which is connected to the other terminal of the supply terminals 40, 40′.

Relay 56 is also connected as a holding relay by means of contact 57 connected in parallel with switch 26 by means of wires 66 and 67. Thus, relay 56 maintains normally closed contact 55 in open position after a shelf 9 has released the limit position micro switch 26.

Thermal switch 63 has a resistance wire 68 by-passing the solenoid of relay 56. Thus, thermal delay switch 63 cuts off relay 56 after a delay time of, for example, 10 seconds.

Switch 58 of relay 56 is connected to supply 40 by wire 59, rectifier 71, wires 73, 74 and to contacts 49 by common wire 69. Back limit micro-switch 29 is connected to supply 40, 40′ by wire 59, rectifier 71, wire 73, switch 29, wire 80, resistance 87 and wires 75, 65. Actuating coil 53 of the rotary stepping switches 34 and 37 is connected in the following circuit: wire 65, 75, coil 53, wire 91, switch 90, and wire 81 in parallel with resistances 92 and contact arms 46 and 47. Thus, the circuit is completed through the rotary switches in various manners to be described hereinafter.

Condenser 77 is connected across wires 73 and 75 after rectifier 71. A relay 86′ has its contact 83 connected to wire 73 and wire 51 itself common to contacts 49′ of rotary switch 37. Actuating solenoid 86 of relay 86′ is connected across back micro-switch 29.

All contacts 50 of rotary switch 34 are connected by common wire 82 to the wire 80 leading from back micro-switch 29.

Normally closed switch 90 is mechanically controlled by shaft 48 of rotary stepping switches 34 and 37; it opens upon actuation of solenoid and closes just prior to movement of arms 46, 47 through one step.

The electric circuit described operates the shelves 9 as follows:

In the position shown in FIGURE 4, all the motors 22 are inactive, except the top motor 22 which has its electric circuit completed through the secondary of transformer 43, rectifier 44, contact arm 46, contact 33, wire 32, top motor 22, common wire 31, normally closed switch 55, wire 31 and the other terminal of the secondary of transformer 43.

Thus, the top motor 22 advances the shelf 9, associated therewith, in accordance with arrow 38. When the front edge of said shelf abuts the front string 24, the latter closes micro-switch 26, thereby closing the electric circuit to solenoid-operated relay 56, which operates to open switch 55 and close switches 57 and 58.

Solenoid of relay 56 is energized through the following circuit: wire 59, closed switch 26, wire 60, solenoid of relay 56, wire 61, closed switches 62 and 64, and wire 65. Top motor 22 stops and remains stopped because the switch 57 is closed and holds relay 56 in operating condition, even if micro-switch 26 opens.

Switch 58 of relay 56 also closes the following circuit to actuate the rotary stepping switches 34 and 37 through one step: solenoid 53 receives a short direct current impulse from the discharge of condenser 77 through wires 73, 74, closed switch 58, wire 69, contact 49, contact arm 47, resistance 92, wire 81, switch 90, wire 91, solenoid 53, wires 75 and 65. Condenser 77 had been previously charged through rectifier 71 connected to the supply 40 by wire 59.

The shelf being stopped in advanced position after a delay of approximately ten seconds, switch 62 opens due to heating of element 68. Thus, relay 56 is de-energized, whereby its switch 55 closes. The top shelf 9 thus retracts rearwardly within the display cabinet until its back edge abuts against back string 28, thereby closing back micro-switch 29.

Condenser 77, which is now re-charged, immediately discharges through wire 73, switch 29, wire 82, contact 50, contact arm 46, resistance 92, wire 81, switch 90, into solenoid 53, which thus receives an impulse sufficient to

rotate switches **34** and **37** through an additional step, whereby the contact arms take a third position, making contact with contacts **33'** and **49'**, respectively.

Thus, the top motor **22** immediately reverses its movement and advances until the associated shelf **9** releases the back string **28**, thereby opening back limit switch **29**.

It will be noted that, due to the high resistance of solenoid **86** of relay switch **86'**, said solenoid will become sufficiently energized to close contact **83** only when switch **29** is open.

Thus, switch **83** closes the following circuit to actuate coil **53** and move contact arms **46** and **47** to their fourth position: condenser **77**, wires **73**, **78**, switch **83**, wire **51**, contact **49'**, contact arm **47**, resistance **92**, wire **81**, switch **90**, wire **91**, solenoid **53**, wires **75** and **65**.

Thus, the shelf will advance sufficiently after its retracting movement to clear back string **28** and thus release micro-switch **29**, which takes its normally open position.

In position **4** of the rotary switches, the second motor **22** is energized to advance the second shelf which accomplishes its advancing movement, stays in advanced display position for about ten seconds, then returns to its retracted back limit position and re-advances slightly to release the back string **28**, allowing opening of switch **29**. Thus, the cycle is repeated for each shelf in succession.

When contact arms **46** and **47** have reached the last terminals **33'** and **49'** respectively, contact arms **46'** and **47'** are ready to make contact with contacts **33** and **49** upon the next step, and the top shelf **9** will start to accomplish its cycle.

In a preferred embodiment, condenser **77** has a value of 40 microfarads. Solenoid **86** has a resistance of 10,000 ohms, while resistance **87** has a resistance of 25,000 ohms, resistance **92** a resistance of 100 ohms and solenoid **53** a resistance of 650 ohms.

From the foregoing, it will be seen that all the shelves **9** are normally in retracted position, but clear of back string **28** and, thus, each shelf moves forwardly in succession to take an advanced article display position and remain in said position for, say 10 seconds under the action of the thermal delay switch **63**, and then moves back into retracted position and re-advances slightly to clear the back string **28**. Then, the lower shelves repeat the same cycle in succession to eventually display the articles carried by all the shelves.

While a preferred embodiment in accordance with the present invention has been illustrated and described, it is understood that various modifications may be resorted to without departing from the scope of the appended claims.

What we claim is:

1. A display cabinet comprising side, back and front walls and a transparent top wall, a plurality of superposed shelves, of a width less than the distance between said front and back walls and mounted within said cabinet for horizontal oscillating movement parallel to said side walls between a retracted position adjacent said back wall, and an advanced display position adjacent said front wall, power means to move said shelves between said two positions and control means responsive to the movement of said shelves and operatively connected to said power means to control the same, such that said shelves will assume said advanced display position successively and one at a time, while the other shelves will remain in said retracted position, to thereby display in succession articles carried by said shelves.

2. A display cabinet as claimed in claim **1**, wherein said power means include a reversible electric motor associated with each shelf and having a driving connection therewith.

3. A display cabinet as claimed in claim **2**, wherein said driving connection includes a screw operatively connected to the shaft of said motor, journal means supporting said screw for rotation and a threaded block engaging said screw and secured to said shelf.

4. A display cabinet as claimed in claim **1**, wherein said power means include one reversible direct current electric motor for each shelf, said control means being electric circuit means including first and second switch means, closable by said shelf upon reaching said advanced and said retracted position respectively, stepping switching means connected to said first and second switch means to operate one step upon closing of either one of said first and second switch means, and rectified current supply means connected to said motors through said stepping switching means to supply to each motor and in succession current of a first polarity and then of opposite polarity, whereby each shelf makes advancing and retracting movements before the next shelf makes similar advancing and retracting movements.

5. A display cabinet as claimed in claim **4**, further including delayed switching means and circuit means operable to cause limited advancing movement of a first shelf out of engagement with said second switch means before the next shelf is caused to make advancing and retracting movements.

6. A display cabinet as claimed in claim **4**, further including delay means associated with said first switch means and with said motors to delay return movement of said shelves from said advanced position.

7. A display cabinet as claimed in claim **4**, wherein said first and second switch means each comprises a stretched string extending across the path of the several shelves in the end zones of movement of said shelves, a normally open switch operatively connected to each string, whereby abutment of any one shelf against one of said strings causes closing of the associated normally open switch.

References Cited by the Examiner

UNITED STATES PATENTS

2,187,012	1/1940	Brenner	312—223 X
2,190,244	2/1940	Row	312—126 X
2,545,575	3/1951	Gauvreau	312—132
2,696,417	12/1954	Jouk	312—319 X
2,829,022	4/1958	Lewis	312—223
2,873,159	2/1959	Becker	312—319 X
3,103,396	9/1963	Portnoy	312—223 X

CLAUDE A. LE ROY, *Primary Examiner.*

A. FRANKEL, *Assistant Examiner.*