May 17, 1966 P. C. WILSON ETAL 3,251,109

FLAG BELT DEVICE

Filed Sept. 9, 1963 2 Sheets-Sheet 1

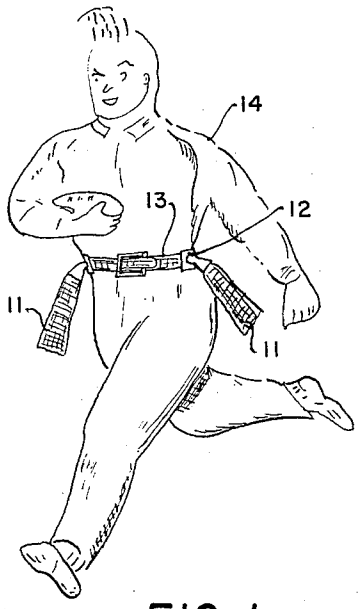

FIG. 1.

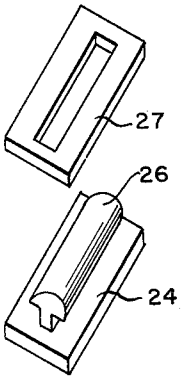

FIG. 5.

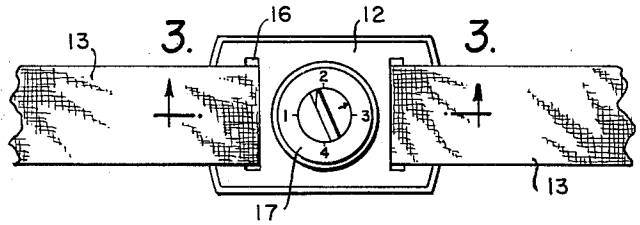

FIG. 2.

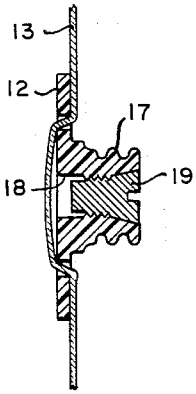

FIG. 3.

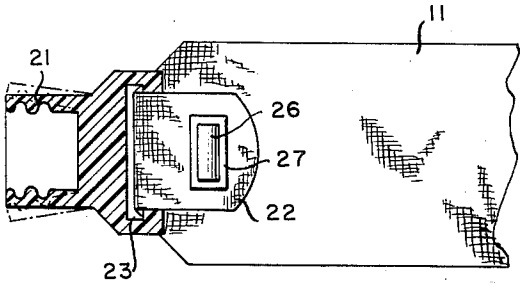

FIG. 4.

INVENTORS

PORTER C. WILSON
NORMAN ADAMS

BY

Dean Lawrence

ATTORNEY

FLAG BELT DEVICE

Filed Sept. 9, 1963 2 Sheets-Sheet 2

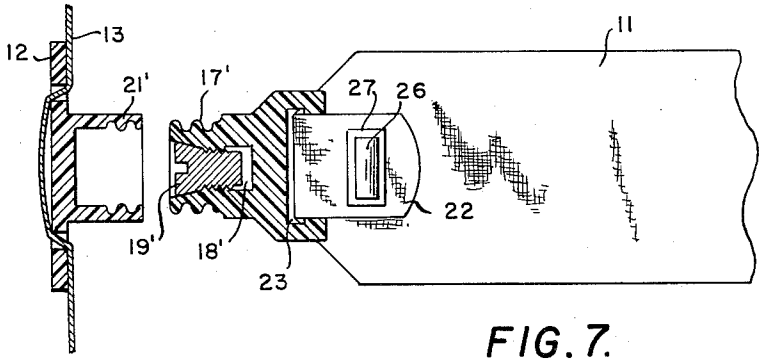

FIG. 6.

FIG. 7.

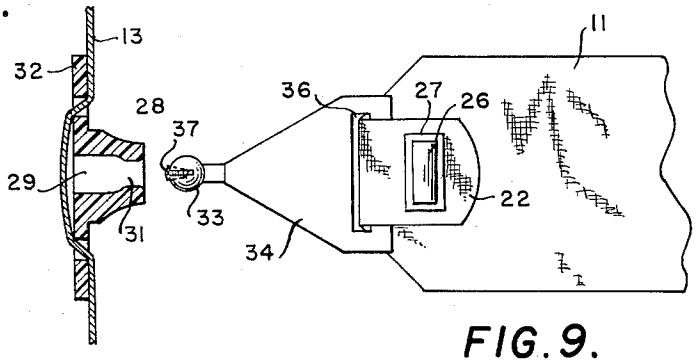

FIG. 8.

FIG. 9.

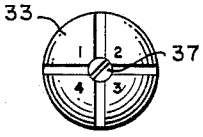

FIG. 10.

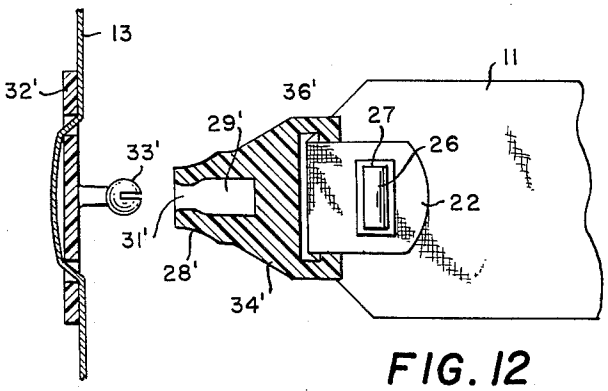

FIG. 11.

FIG. 12

INVENTORS

PORTER C. WILSON
NORMAN ADAMS

BY

ATTORNEY

United States Patent Office

3,251,109

Patented May 17, 1966

1

3,251,109

FLAG BELT DEVICE

Porter Carol Wilson, 320 E. Elvira Road, and Norman Carlyle Adams, Box 1457, both of Tucson, Ariz.

Filed Sept. 9, 1963, Ser. No. 307,480
2 Claims. (Cl. 24—216)

This invention relates to a flag-tag device and more particularly to a variable pull flag-tag coupling for detachably securing a flag to a belt.

In United States Patent 2,966,356, which issued December 27, 1960, a flexible separable flag belt device for use in tag games such as flag or touch football is disclosed in detail and includes a ball and socket arrangement for detachably securing a flag to the belt of the player. One of the objects of the earlier invention, as stated in the noted patent, is the principle of maintaining a substantially constant, uniform pull to detach the flag from the belt so as to equalize this phase of the game. This is, of course, an important feature when two evenly-matched teams or age groups are playing.

The games of flag tag and flag football have become very popular and players of widely different ages participate. This makes it impossible to design a single ball and socket coupling having a standard tension and requiring one uniform pulling force to detach the flag from the belt. What might seemingly require a slight tug for an older player to detach the flag may require a great pull by a younger player, throwing him off balance and possibly causing him to fall and to be injured. And because of the added cost it is not economical to manufacture and stock specific flag tag couplings having selected coupling tensions for each of the various age groups that use flag tag devices.

Another difficulty with conventional male and female couplings such as the ball and socket arrangement disclosed in the noted patent is that when the pull-out tension is sufficient to secure the flag from being released due to accidental bumping or jostling, it is sometimes difficult to force the ball or plug into the socket, particularly for younger players.

Accordingly, it is an object of this invention to provide an improved coupling for a flag tag device.

Another object of this invention is to provide a variable pull flag tag coupling including means for varying the pull required to detach the flag from the belt.

Still another object of this invention is to provide an improved male and female flag tag coupling wherein said male member or plug is deformable, permitting it to be more easily inserted into the female member or socket.

Still another object of this invention is to provide a screw-in snap-off coupling for detachably securing a flag to a belt or mounting pad.

A further object of this invention is to provide a variable pull threaded screw-in snap-off flag tag coupling device including a tension set screw for selectively varying the tension on the threads.

Another object of this invention is to provide a variable pull flag tag coupling of the ball and socket type including means for varying the size of the ball and thereby varying the force required to withdraw the ball from the socket.

These and many other objects and advantages in a flag tag coupling may be achieved in accordance with this invention which in general may include a deformable male member or plug and a female member or socket for frictionally receiving and retaining the plug. The plug may be formed as a bifurcated ball or cylindrical member which may be atatched either directly to the belt or on a mounting pad adjustably secured to the belt. The socket is secured to the flag. As alternative embodiments of the invention, the relative positions of the plug and socket may be reversed.

2

A tension set screw is threadably received in the plug and varies the diameter of the plug and thus the pull required to remove the plug from the socket. The plug may also be provided with suitable markings to indicate the position of the tension set screw and thus the diameter of the plug and the pull-out force required to snap or jerk the plug from the socket and thus detach the flag from the belt.

Both the socket and plug are formed of a tough, wear-resistant plastic material that produces a popping sound when the plug is jerked from the socket, thus providing an audible signal at the time the player is de-flagged. Resilient threads formed on and in the plug and socket respectively permit the plug to be screwed into the socket but pulled or snapped out of the socket. This screw-on - snap-off feature permits the plug to be easily and positively inserted into the socket while at the same time assuring that the plug is securely retained in the socket.

Many other objects and advantages of the invention will become apparent from the following detailed description when read in view of the accompanying drawings, wherein:

FIGURE 1 illustrate a flag tag device in accordance with this invention secured to the waist of a player and in which a flag tag is detachably secured to an adjustable belt;

FIGURE 2 is an enlarged plan view of an adjustable mounting pad through which the belt is passed and from which a deformable externally threaded male member or plug projects, the plug having a tension set screw therein;

FIGURE 3 is a sectional view of the mounting pad taken along the lines 3—3 in FIGURE 2 illustrating the plug and tension set screw in greater detail;

FIGURE 4 is a sectional view of an internally threaded socket adapted to be screwed on and snapped off the plug and to which a flag is attached by means of a cinch washer and stud;

FIGURE 5 is an exploded view of the cinch washer and stud;

FIGURES 6 and 7 illustrate an alternative embodiment of the invention wherein the relative positions of the plug and socket members are reversed;

FIGURES 8 and 9 illustrate an alternative embodiment of the invention including a ball and socket coupling, the ball being bifurcated and including a diameter varying tension set screw;

FIGURE 10 is an end view of the bifurcated ball shown in FIGURE 9; and

FIGURES 11 and 12 illustrate an alternative embodiment of the invention wherein the deformable plug or ball is bifurcated and the socket is arranged to permit the ball to expand after insertion into the socket.

Referring now to the drawings, FIGURE 1 illustrates a pair of flags **11** detachably secured to mounting pads **12** adjustably secured to a belt **13** about the waist of a player **14**. Although only two flags are shown any number of flags can be similarly attached to the belt **13**. The flags **11** are preferably durable and may be formed of nylon coated with colorfast vinyl plastic. The mounting pads **12** may be square or rectangular and are preferably formed of a tough, wear-resistant rubber-like plastic material. As shown in FIGURE 2, the mounting pads **12** are provided with slits **16** through which the belt **13** is passed, permitting the mounting pads **12** to be adjustably positioned about the waist of the player.

As shown in FIGURE 3, an externally threaded plug **17**, having a central passage **18** formed therethrough is integrally formed on the mounting pad **12** and projects therefrom. A tapered tension set screw **19** which may be formed of wood or plastic is threadably received in the central passage **18** and is arranged to expand or deform the plastic plug **17** thereby varying the diameter of the

external threads on the plug **17**. As the screw **19** is withdrawn the plug **17** contracts because of its resilient properties.

The externally threaded plug **17** is screwed into a cylindrical internally threaded socket **21** also formed of a tough rubber-like plastic material as shown in FIGURE 4. The end **22** of the flag **11** is looped through an aperture or eye **23** integrally formed on the socket **21** and secured by a plastic cinch stud **24** having an enlarged head which extends through the flag **11** and a cinch washer **27**.

As shown in FIGURE 2, markings **1**, **2**, **3** and **4** are arranged on the plug to indicate the position of the tension set screw **19** and thus the thread diameter of the plug **17**. As variation in the plug diameter determines the degree of frictional engagement between the threaded plug and socket, which in turn determines the pulling force required to snap or jerk the members apart, the use of the tension screw **19** provides a variable pull coupling. The markings **1**, **2**, **3** and **4** are used to calibrate the coupling and thus indicate the required setting of the tension screw to produce varied and selected coupling tensions requiring determined uncoupling or pulling forces for different age groups or sizes of players.

FIGURES 6 and 7 illustrate an alternate embodiment of the invention wherein the relative positions of the respective plug **17** and the socket **21** are reversed. An internally threaded socket **21'** is integrally formed on a mounting pad **12'** and the flag **11** is attached to the plug **17'** as previously described. The plug **17'** also includes a tapered tension set screw **19'** for selectively varying the diameter of the threaded plug **17'** and thus the pulling force to jerk it from the socket **21'**. Thus, by employing resilient deformable threads, the plug may be easily screwed into the socket **21'** and jerked out by pulling on the flag **11** with selectively variable forces. The resilient threads formed on the plug **17'** and in the socket **21'** are of a tough, wear-resistant rubber-like plastic and thus firmly secure the plug within the socket, preventing accidental detachment or dropping of the flag. It is to be noted that both of the tension set screws **19** or **19'** may be omitted from each of the respective embodiments of the invention and still provide a screw-on - snap-off operation.

FIGURES 8 and 9 disclose an alternative embodiment of the invention wherein a socket **28** having a central passage **29** with a reduced mouth opening **31** is integrally formed on a mounting pad **32**. The pad and socket are formed of a tough, wear-resistant rubber-like plastic material and the socket **28** is adapted to receive a deformable, bifurcated ball **33** integrally formed on a flat buckle **34** having a loop **36** formed thereon and through which the end **22** (of the flag **11**) is passed, and secured by the head **26** of cinch stud **24** and cinch washer **27** as previously described. A tapered tension set screw **37** is threadably received within a tapered central aperture in the bifurcated ball **33** as shown in FIGURE 10. The tension set screw **37** deforms the ball **33** when threaded into the bifurcated ball and thus varies its diameter. The ball is also provided with markings **1**, **2**, **3** and **4** that are used to indicate the diameter of the ball and thus the pull required to jerk the ball from the socket. It is not necessary that the ball **33** be bifurcated as the tapered tension set screw **37** will vary the diameter of the ball when advanced into the central ball passage.

Further, as shown in FIGURES 11 and 12 the relative

position of the ball **37** and socket **28** shown in FIGURES 8 and 9 can be reversed, the ball being formed on and projecting from the mounting pad and the flag being attached to the socket. In addition, the tension set screw **37** is not employed in this arrangement. As can be observed the diameter of the bifurcated ball **33'** is reduced as it is inserted through the passage **31'** of the socket **28'** permitting it to be easily inserted into the chamber **29'** where, due to the resilience of the material, the bifurcated ball **33'** expands to its original diameter, securing the flag **11** to the mounting pad **32'**.

Although preferred embodiments of the invention have been described in detail it is to be understood that the invention is not to be limited by the exact structural details herein as the invention is subject to numerous modifications. Although the flag, socket and plug members are preferably formed of tough, wear-resistant inexpensive plastic material, these components can of course be made of other material such as leather, rubber or the like. Further, although it is preferred that the mounting pad be used, this is not essential as the plug or socket as the case may be could be directly formed as a part of the belt. Therefore, in view of the numerous changes and modifications that can be made within the principles of the invention, the invention is to be limited only by the scope of the appended claims.

What is claimed is:

1. A coupling for detachably securing a first member to a second member comprising: a deformable plug secured to said first member; and socket means secured to said second member for frictionally receiving and retaining said deformable plug, said plug including means for varying the diameter thereof thereby providing a variable pull coupling and further indicia means for indicating the diameter of said plug and thus the force required to pull said plug from said socket.

2. A coupling for detachably securing a first member to a second member comprising: a deformable and externally threaded plug secured to said first member; a tension set screw threadably received within said plug for varying the external thread diameter on said plug; indicia formed on said plug cooperative with said set screw for indicating the diameter of said second member for threadably receiving said plug thereby providing a variable pull coupling.

References Cited by the Examiner

UNITED STATES PATENTS

69,965	10/1867	Case	24—213
1,300,580	4/1919	Carr	24—213
1,660,665	2/1928	Aleksandrowicz	24—208
2,693,625	11/1954	Van Buren	24—77
2,800,697	7/1957	Carpinella	24—77
2,905,991	9/1959	Reiter	24—77
2,966,356	12/1960	Wilson	273—1
2,986,396	5/1961	Abbott et al.	273—55
3,063,718	11/1962	Steinkamp	273—55

FOREIGN PATENTS

1,216,512	4/1960	France.
588,871	6/1947	Great Britain.

WILLIAM FELDMAN, *Primary Examiner.*

RICHARD C. PINKHAM, *Examiner.*

G. L. PRICE, B. A. GELAK, *Assistant Examiners.*