March 22, 1966 T. P. HECKMAN 3,241,727

SELF-VENTING DISPENSER

Filed Oct. 26, 1964 3 Sheets-Sheet 1

Fig.1

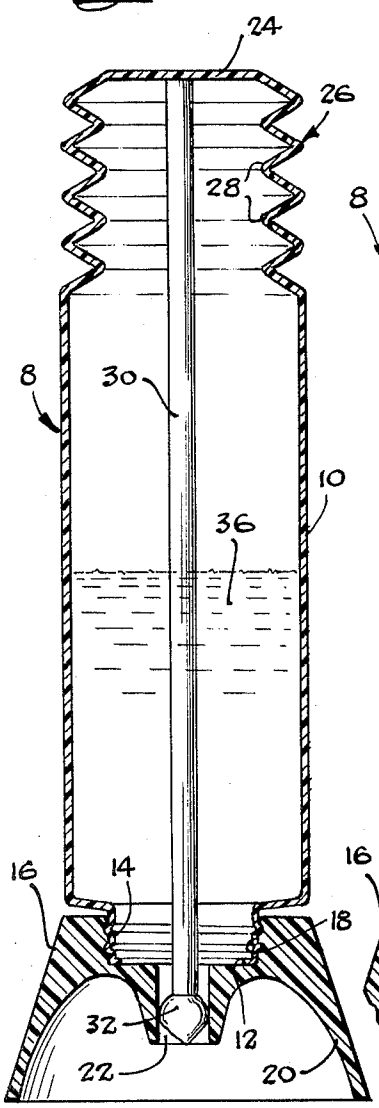

Fig.2

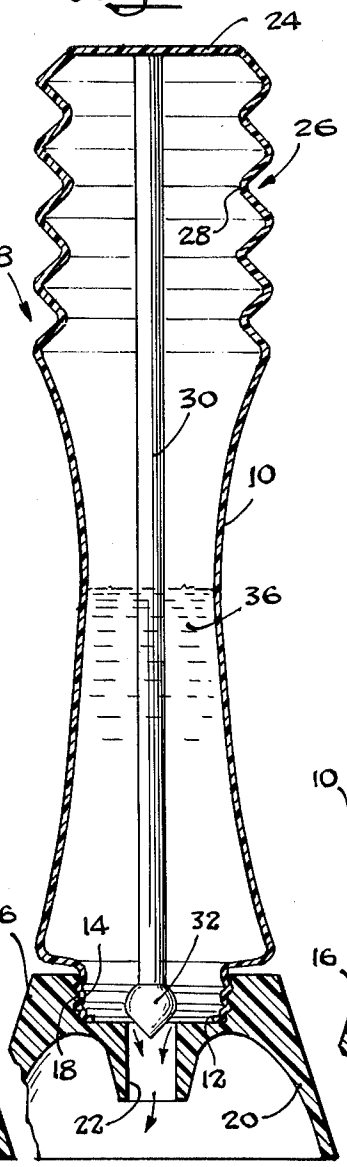

Fig.3

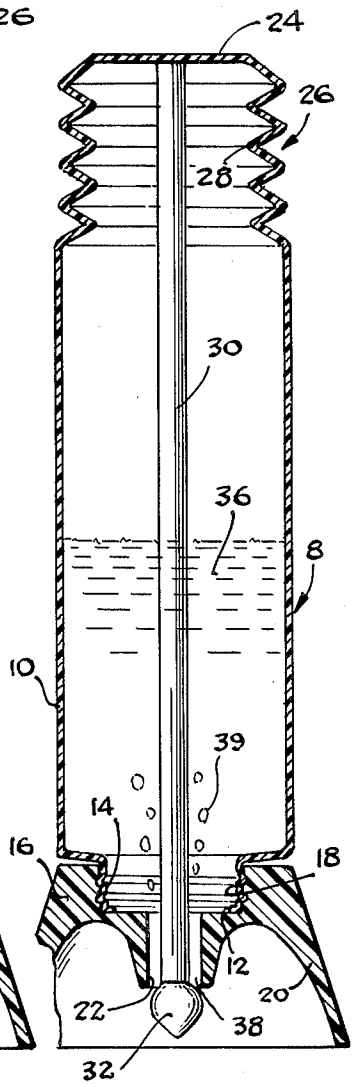

Inventor
Thomas P. Heckman
By Frost, Burmeister & Kulie
Attorneys

SELF-VENTING DISPENSER

Filed Oct. 26, 1964 3 Sheets-Sheet 2

Fig. 4

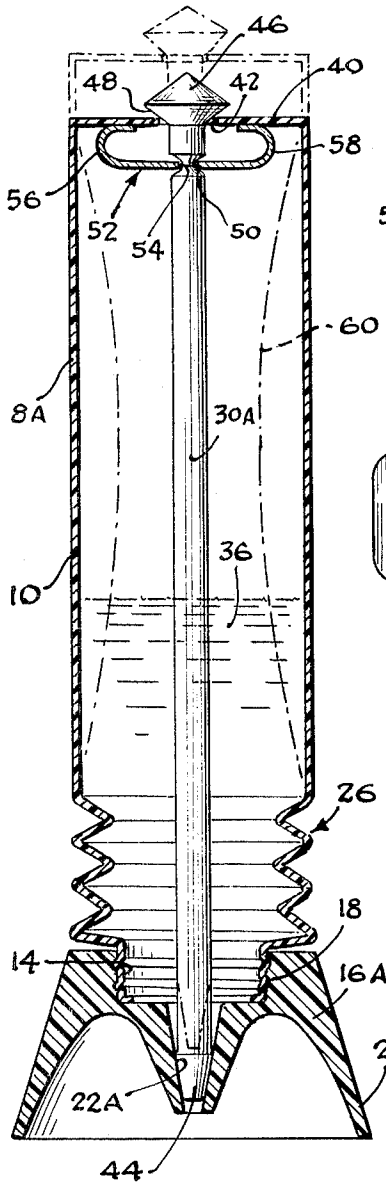

Fig. 6

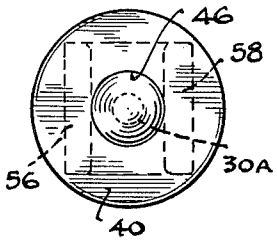

Fig. 7

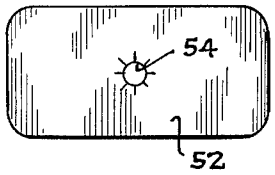

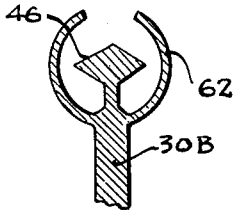

Fig. 8

Fig. 5

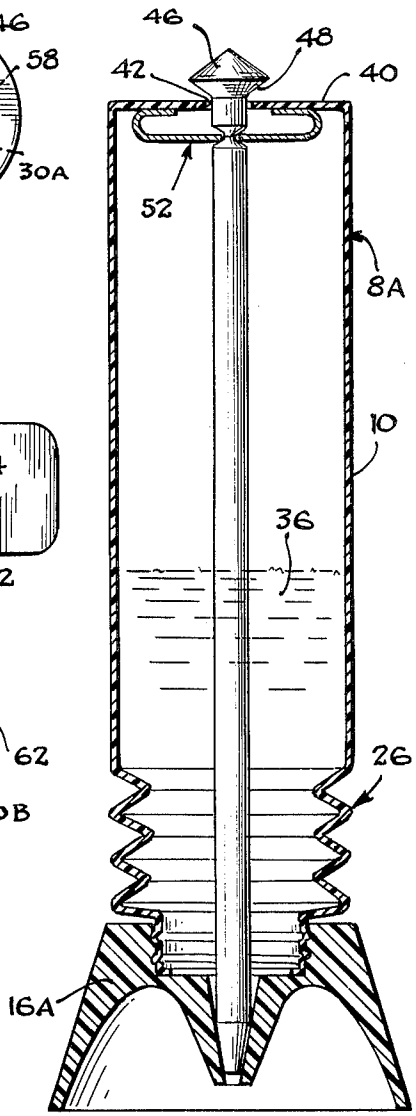

Inventor
Thomas P. Heckman
By Frost, Burmeister & Kulie
Attorneys

SELF-VENTING DISPENSER

Filed Oct. 26, 1964 3 Sheets-Sheet 3

Fig.9

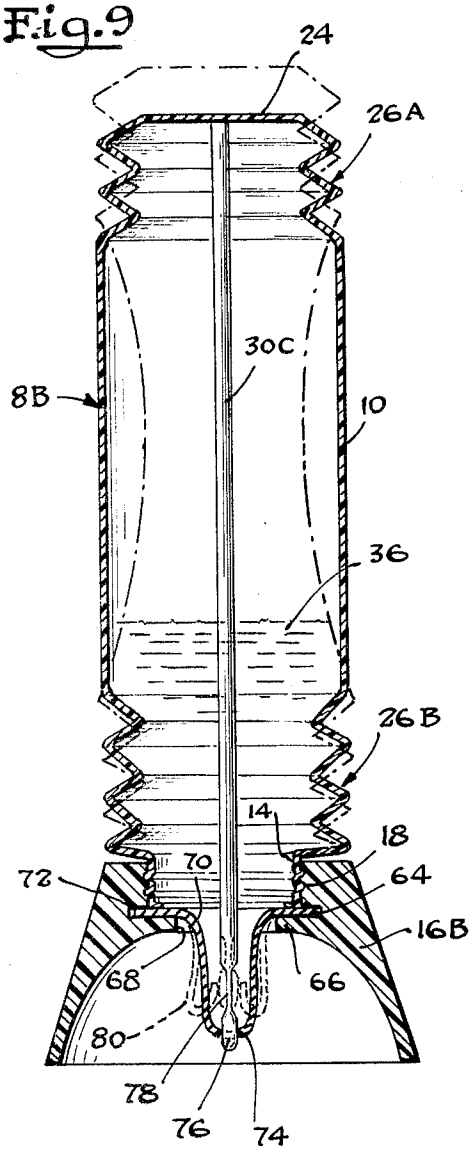

Fig.10

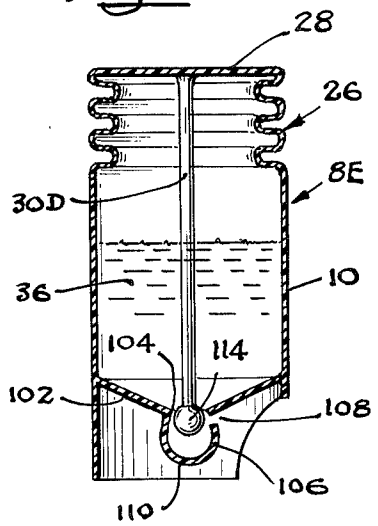

Fig.11

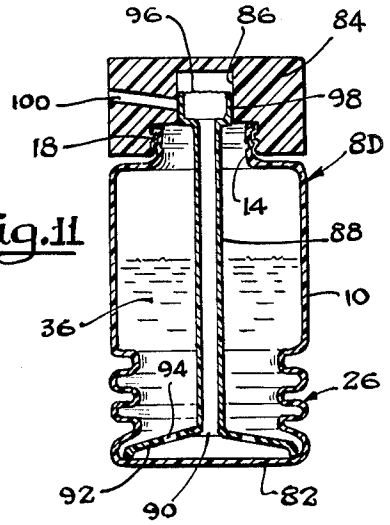

Inventor
Thomas P. Heckman
By Frost, Burmeister & Kulie
Attorneys

United States Patent Office

3,241,727

Patented Mar. 22, 1966

1

3,241,727

SELF-VENTING DISPENSER

Thomas P. Heckman, 533 Edgewood Road, Flowerfield, Lombard, Ill.

Filed Oct. 26, 1964, Ser. No. 406,225
17 Claims. (Cl. 222—213)

The present invention relates generally to devices for dispensing liquids, such as liquid foods, detergents, medicines, sauces, glues, adhesives, and the like. This application is a continuation-in-part of application Serial No. 223,425, filed September 13, 1962, entitled Liquid Dispenser now Patent No. 3,154,222.

FIGURE 1 of the inventor's Patent No. 3,154,222 discloses a squeezable liquid dispenser which uses a pliant cylindrical wall mounted on a base at one end and on a bellows region capable of expanding axially at the other end. The base has an opening provided with a conical seat, and a pin with a conical end engages the conical opening and is mounted at its end opposite the opening on the bellows region. The contents of the container may be dispensed by applying presure to the pliant cylindrical wall to increase the pressure of the entrapped air within the container, thus forcing extension of the bellows region and retraction of the pin from the conical seat. When the distorting force is removed from the cylindrical wall, the pressure of the entrapped air within the container falls below that of the atmospheric pressure, since a portion of the contents of the container has been removed, hence shortening the bellows and forcing the pin into firm engagement with the conical seat of the opening. If the seal between the pin and the conical seat is truly air tight, the wall of the container will be prevented from returning to its cylindrical configuration due to the fact that the pressure of the entrapped air within the container is less than atmospheric. Periodically, this condition must be remedied by manually releasing the seal between the base and the container.

An object of the present invention is to provide a liquid dispenser which responds to distorsion of a pliant wall and which automatically vents the interior of the container to the atmosphere to limit the pressure differential between the entrapped air within the container and the atmosphere.

It is also an object of the present invention to provide a squeeze-type dispenser with an improved valve mechanism responsive to distortion of the container, particularly a valve mechanism which remains operable when dispensing sticky materials, cements, adhesives, and the like.

These and further objects of the present invention will become readily apparent to those skilled in the art from a further consideration of the specification, particularly when viewed in light of the drawings, in which:

FIGURE 1 is a vertical sectional view of a self-venting combination container and dispenser constructed according to the teachings of the present invention and illustrated in the storage condition;

FIGURE 2 is a vertical sectional view of the container and dispenser of FIGURE 1 illustrated in the discharge condition;

FIGURE 3 is a vertical sectional view of the container and dispenser of FIGURE 1 and FIGURE 2 in the venting condition;

FIGURE 4 is a vertical sectional view of another embodiment of a combination container and dispenser provided with an automatic venting device;

FIGURE 5 is a vertical sectional view of the container and dispenser FIGURE 4 illustrating the venting device in the open condition;

2

FIGURE 6 is a plan view of the container and dispenser of FIGURES 4 and 5;

FIGURE 7 is a plan view of the spring utilized in the vent of the container and dispenser of FIGURES 4 through 6;

FIGURE 8 is a fragmentary sectional view of a modified form of venting device for the container and dispenser of FIGURES 4 through 7;

FIGURE 9 is a vertical sectional view of still another embodiment of a self-venting container and dispensing device constructed according to the teachings of the present invention;

FIGURE 10 is a vertical sectional view of a self-venting container and dispensing device which constitutes still another embodiment of the present invention; and

FIGURE 11 is a vertical sectional view of a self-venting container and dispensing device which constitutes another embodiment of the present invention.

FIGURES 1 through 3 are vertical sectional views taken along the same plane showing one embodiment of the present invention in the storage condition, discharge condition, and venting condition, respectively. This embodiment of the present invention has a container **8** constructed of pliant material, such as polyethylene plastic, polyurethane plastic, or hard rubber. The particular construction of the embodiment illustrated has a cylindrical wall **10**, although it is to be understood that other geometrical configurations may also be used for the wall **10** providing that distorting or squeezing of the wall **10** results in a change in the volume of the container in order to provide a difference in pressure within the container from atmospheric pressure responsive to distortion of the geometric shape of the container. The cylindrical body **10** extends from a mouth **12** at one end which is provided with a threaded neck **14** for receiving a cap **16**. The cap **16** has a threaded recess **18** which engages the threads of the neck **14** of the container and forms a seal. The cap **16** is also provided with a cup-shaped flange **20** which is adapted to mount the container in a vertical position on a flat surface, the flange **20** extending circularly about the recess **18** and depending therefrom. The cap **16** also has an axial opening **22** with a cylindrical bore extending from the recess **18** along the axis of the cylindrical wall **10** of the container **8**. The opening **22** is utilized to discharge contents from the container **8**.

The end of the container **8** opposite the mouth **12** thereof has a flat disc-shaped portion **24** which is circular in shape and the disc-shaped portion **24** is mounted on the end of the cylindrical wall **10** opposite the mouth **12** by a bellows region **26**. The bellows region **26** is formed by a plurality of grooves **28** which extend coaxially about the axis of the container **8** at spaced intervals. The grooves **28** are disposed in planes normal to the axis of the container and equally spaced from each other.

A pin **30** is disposed on the axis of the container **8** and the pin has an expanded end **32** which is snugly and slightly disposed within the cylindrical opening **22** of the cap **16**. The end of the pin **30** opposite the opening **22** is mounted on the disc portion **24** of the container **8**.

The disc portion **24** is sufficiently rigidly mounted on the container **8** to maintain the pin **30** in alignment with the axis of the cylindrical wall **10**. FIGURES 1 through 3 also indicate a body **36** of liquid which is to be dispensed from the container and which partially fills the interior of the container **8**. When the cylindrical walls **10** of the container **8** are depressed to assume the position illustrated in FIGURE 2, the entrapped air within the container **8** is compressed forcing the bellows region **26** to extend, thus moving the disc portion **24** of the con-

tainer 8 to a position more remote from the neck 14 of the container. Since the pin 30 is mounted on the disc portion 24, the pin is translated away from the opening 22, as indicated in FIGURE 2. As a result, the liquid body 36 within the container 8 may flow downwardly through the opening 22, as indicated by the arrows in FIGURE 2. Further, the pressure generated by squeezing or compressing the container 8 is also exerted upon the body of liquid 36 within the container, thereby causing the liquid to be expelled under pressure.

It will be recognized that the operation of the dispenser of FIGURES 1 through 3 is to this point substantially the same as the operation of the dispensers disclosed in applicant's prior patent, particularly the embodiment of FIGURE 1 of that patent. However, upon release of the force distorting the shape of the wall 10 of the container 8, the dispenser of FIGURES 1 through 3 of the present application operates in a different and improved mode over that of the dispenser disclosed in applicant's prior patent.

From FIGURE 2, it is aparent that depressing the walls 10 of the container 8 to discharge a portion of the body 36 of liquid within the container, results in extension of the bellows region 26 and translation of the protruded end 32 of the pin 30 into the interior of the container 8, thus opening the cylindrical opening 22 for the passage of a portion of the contents 36. However, when the force maintaining distortion of the wall 10 of the container is removed, the wall 10 immediately assumes its cylindrical shape, as illustrated in FIGURE 3. At this instant, the quantity of liquid in the body 36 is smaller than it was before discharge, but the number of atoms of air within the container 8 is the same as it was before discharge. Hence, the pressure of the air entrapped within the container 10 immediately after discharge and release of the distorting pressure from the wall 10 will fall below atmospheric pressure, and atmospheric pressure will force the bellows region 26 to partially collapse in order to restore equilibrium between the entrapped air within the container 8 and the atmospheric pressure. As a result, the pin 30 is translated toward the neck 14 of the container 8, and the protruding end 32 is translated toward the exterior mouth, designated 38, of the cylindrical opening 22. As indicated in FIGURE 3, the protruding end 32 must be translated to break the seal between the cylindrical opening 22 and the protruding end 32, thus permitting air to enter the mouth 22, as indicated by the bubbles 39. The air entering the mouth 22 continues as long as the pressure of the entrapped air within the container 8 is less than atmospheric pressure. Were it not for the fact that the bellows region 26 continuously seeks to resume its unstressed or rest position, the entrapped air within the container 8 would be at atmospheric pressure and a rest position would be achieved with the protruding end 32 of the pin 30 outside of the mouth 38 of the opening 22, as indicated in FIGURE 3, but the dispenser is constructed with the bellows region 26 in rest position with the protruding end 32 position centrally of the bore 22, that is, in the position indicated in FIGURE 1. Hence, the pressure of the entrapped air within the container 8 is reduced below atmospheric pressure as a result of the spring force of the bellows region 26 attempting to restore the bellows region 26 to its equilibrium position, and thus expanding the bellows region 26 against atmospheric pressure. When sufficient air from the atmosphere enters through the opening 22, the bellows region 26 will be able to expand against atmospheric pressure a sufficient distance to pull the protruding end 32 into the channel 22 and form a seal therewith terminating the venting action of the dispenser. The dispenser will thus have reached its rest position, and the pressure of the entrapped air within the container 8 will approach atmospheric pressure. It is to be noted that the pressure of the entrapped air within the container may be less than atmospheric pressure under the rest conditions due to the restoring force of the bellows region 26, and that this fact aids in avoiding leakage of the body of liquid 36 from the container 8.

In the embodiment of FIGURES 1 through 3, the protruding end 32 is circular in cross section normal to the axis of the pin 30, and the opening 22 is cylindrical. The diameter of the protruding portion 32 in the plane normal to the axis of the pin 30 exceeds the diameter of the opening 22 to provide an interference fit so that a seal is formed between the protruding portion 32 and the surface of the opening 22. Either the protruding portion 32 of the pin or cap 16 forming the opening 22, or both, must be pliable to permit translation of the pin. Also, the protruding portion 32 may be spherical or irregular in shape. In the embodiments of FIGURES 1 through 3 the protruding portion is modified from a sphere to increase the dimension along the axis of the pin 30 in order to facilitate alignment of the pin 30 with the opening 22 at the moment of release of the distorting force from the wall 10 of the container 8.

FIGURES 4 through 8 illustrate a self-venting dispenser which constitutes another embodiment of the present invention. Since many of the elements of this dispenser are identical to those described in the embodiment of FIGURES 1 through 3, identical reference numerals will be used for identical parts. In the embodiment of FIGURES 4 through 8, a modified container 8A is employed which has a bellows region 26 disposed adjacent to the neck 14 of the container and an end 40 sealed to the end of the cylindrical wall 10 and remote from the bellows regions 26. The end 40 has a circular orifice 42 centered on the axis of the cylindrical wall 10.

A cap 16A has a threaded recess 18 which engages the threads of the neck 14 of the container 8A and forms a seal therewith. The cap 16A is also provided with a cup-shaped flange 20 which extends circularly about the recess 18. The cap 16A has an axial opening 22A with a bore tapering conically from the recess 18.

A pin 30A is disposed on the axis of the cylindrical wall 10, and the pin 30A has a conical end 44 which matches the seat formed by the conical opening 22A to form a seal therewith. The end of the pin 30A remote from the end 44 extends through the orifice 42 in the end 40 of the container 8A and terminates in a circular protrusion 46 on the exterior of the container 8A. The protrusion 46 has a circular cross section normal to the axis of the pin 30A with a diameter greater than the diameter of the orifice 42. Further, the protrusion 46 has a conical surface 48 confronting the orifice 42 and adapted to abut the end of the container 40 about the orifice 42 to form a fluid-tight seal therewith.

The pin 30A has a circular groove 50 disposed in the interior of the container 8A adjacent to the end 40 and a spring 52 is mounted in the groove 50 by means of a central aperture 54 in the spring 52. The spring 52 is in the form of a generally rectangular flat plate, as indicated in FIGURE 7, and the plate is serrated about the aperture 54 to permit the plate to engage the groove 50. The ends of the plate 56 and 58 are bent in to a U-shape to abut the end 40 of the container 8A.

In the storage position, which is indicated in FIGURE 4, the bellows region 26 exerts a force on the pin 30A through the spring 52 to maintain a sealing pressure between the conical end 44 of the pin 30A and the conical seat formed by the opening 22A. The spring 52 in the storage position exerts a force on the end 40 greater than the force exerted by the bellows region 26 to form a sealing force for maintaining the end 40 in rigid abutment with the conical surface 48 of the protrusion 46.

When the cylindrical wall is distorted to reduce the volume of the container 8A, the pressure of the entrapped air within the container 8A exceeds the pressure of the atmospheric air, thereby permitting the bellows region 26 to elongate and translating the pin 30A to

separate the conical end **44** from the seat **22A** and permit the discharge of the body of liquid **36** within the container **8A**. FIGURE 4 illustrates in dash lines this condition of operation.

It will be noted that the wall **10** has been distorted inwardly at **60** in FIGURE 4, but that when this inward distortion is removed following discharge of a portion of the contents of container **8A**, the wall **10** resumes its cylindrical shape, as illustrated in the venting condition of FIGURE 5. At the instant the distorting force which produced the identation **60** of FIGURE 4 is removed and the wall **10** resumes its cylindrical configuration of FIGURE 5, the pressure on the interior of the container **8A** is substantially below atmospheric pressure. As a result, atmospheric pressure tends to shorten the bellows region **26**, and this force operates against the force of the spring **52** and must exceed the force of the spring **52** to permit the end **40** of the container **8A** to be displaced toward the cap **16A**, thus translating the surface **48** of the protrusion **46** from the opening **42** in the end **40** and permitting ambient atmosphere air to enter the interior of the container **8A**. This venting action continues until the difference in pressure between the interior entrapped air of the container **8A** and the atmospheric air exterior of the container **8A** falls to permit the bellows region **26** to expand and exert a smaller force on the end **40** of the container **8A** than the spring **52**, thus permitting the spring **52** to drive the end **40** against the conical surface **48** of the protrusion **46** and sealing the interior of the container **8A** from the ambient atmosphere.

FIGURE 8 illustrates a modified form of spring for use in the embodiment of FIGURES 4 through 7. The spring of FIGURE 8 is constructed integral with the pin **30B**, which is otherwise identical to the pin **30A** illustrated in FIGURES 4 through 6. The spring in the construction of FIGURE 8 employs a sheet portion **62** which forms a segment of a cylinder and extends from the pin **30B** immediately below the protrusion **46** thereof. The segment formed by the sheet portion **62** is symmetrically disposed relative to the axis of the pin **30B**, leaving a gap on the axis of the pin **30B**. The protrusion **46** is of sufficiently small diameter to permit it to be forced through the orifice **42** in the end **40** of the container **8A**, thereby further bending the portions of the sheet portion **62** on opposite sides of the axis of the pin **30B** and providing the requisite spring action to maintain the protrusion **46** in abutment with the end **40** in the storage condition.

The stem **30B** may be fabricated from the enumerated plastic materials utilized for the container **8A**. It is generally preferable, however, to utilize a material with greater resiliency for the pin **30B** than utilized for the container **8A** itself.

FIGURE 9 illustrates a further embodiment of the present invention which is particularly suitable and desirable for use in dispensing sticky or adhesive type contents, such as Elmer's glue, cement, and other types of materials which tend to dry permanently sealing a dispenser from further use. In the embodiment of FIGURE 9, a container **8B** is employed which has a cylindrical central section **10** and a pair of bellows regions **26A** and **26B** disposed at opposite ends of the cylindrical wall **10**. The container **8B** has an end cap **24** which seals the end of the bellows region **26A** opposite the cylindrical wall **10**, and the end of the bellows region **26B** remote from the cylindrical wall **10** has a neck **14** identical to the necks bearing the same reference numeral in previously described embodiments.

A cap **16B** has a threaded recess **18** which engages the neck **14** of the container **8B** and is provided with a circular flat groove **64** which extends inwardly from the end of the recess **18** on a plane normal to the central axis of the cylindrical wall **10** of the container **8B**. The cap **16B** also has an outwardly extending flange **66** from the side of the groove **64** remote from the recess **18** which is also disposed in a plane parallel to the groove **64** and forms a circular aperture **68** of smaller diameter than the recess **18**. A soft pliant nipple **70** extends through the aperture **68** and has an outwardly extending circular flat flange **72** which is disposed within the groove **64** and securely clamped in place between the neck **14** of the container **8B** and the inwardly extending flange **66** of the cap **16B**. The nipple **70** has a circular aperture **74** disposed on the axis of the cylindrical wall **10**. A pin **30C** is mounted at one end on the end **24** of the container **8B**, and in the storage position has its other end **76** disposed within the aperture **74** of the nipple **70**.

As illustrated in FIGURE 9, the end **76** of the pin **30C** has approximately the same diameter as the central portions of the pin, and a relief portion **78** is disposed immediately adjacent to the end portion **76**. Also, the end portion **76** has a generally cylindrical exterior surface with an axis on the axis of the pin **30C**, and the diameter of this cylindrical end **76** is slightly larger than the diameter of the circular aperture **74** of the nipple **70** so that the end **76** will seal within the aperture **74** of the nipple but may be translated relative thereto.

Operation of the container of FIGURE 9 is similar to that described for the container of FIGURES 1 through 3 in that distorting the cylindrical wall **10** of the container **8B** elongates the container **8B** drawing the pin **30C** inwardly of the container **8B** and tending to translate the end **76** of the pin **30C** inwardly from the aperture **74** of the nipple **70**. However, when glue or other sticky products are disposed within the container **8B**, these will form a mechanical attachment between the nipple **70** and the portion of the end **76** of the pin **30C** which is in communication with the ambient atmosphere. It is this mechanical attachment which prevents the free dispensing of glues and other adhesive substances from most containers. In the embodiment of the present invention illustrated in FIGURE 9, however, the mechanical attachment between the end **76** and the nipple **70** results in the nipple **70** being distorted in the manner indicated by the dashed lines at **80** in FIGURE 9, thus rolling the end of the nipple carrying the aperture **74** thereof against the end **76** of the pin. This rolling action of the nipple **70** against the pin **30C** results in a breaking of the mechanical attachment between the nipple **70** and the end **76** of the pin **30C** so that the nipple will assume the solid line configuration illustrated in FIGURE 9, thus positioning the end **76** completely within the container **8B** and exposing the aperture **74** to the contents or body **36** of the materials to be dispensed. Liquid glues and cements or adhesives will then flow through the aperture **74** until the distorted cylindrical wall **10** is permitted to return to its cylindrical configuration.

At the moment the wall **10** returns to its cylindrical configuration, the operation of the dispenser of FIGURE 9 conforms to that described for the dispenser of FIGURES 1 through 3. The pressure of the entrapped air within the container **8B** being lower at this instant than the atmospheric pressure, the bellows **26A** and **26B** are shortened, thus forcing the pin **30C** through the aperture **74** of the nipple **70** and positioning the relieved portion **78** thereof in the aperture **74** to permit air from the ambient atmoshpere to enter into the container **8B**. As the pressure within the container **8B** approaches atmospheric pressure, the bellows regions **26A** and **26B** elongate to return the end **76** of the pin **30C** to a position within the aperture **74** of the nipple **70**.

FIGURE 11 illustrates still another embodiment of the present invention. In this embodiment of the invention, a container **8D** is employed which utilizes a cylindrical wall **10** of pliant material. The container has a base or bottom end **82** which is adapted to rest upon a flat

surface, and a bellows region is disposed between the base **82** and the cylindrical wall **10**. The container 8D has a neck **14** at the end of the wall **10** opposite the bellows regions **26**. A cap **84** has a threaded recess **18** which threadedly engages the neck **14** and is sealed thereto. A body **36** of liquid which is to be dispensed is disposed within the container 8D.

The cap **84** has a cylindrical recess **86** disposed on the axis of the cylindrical wall **10**. A hollow stem **88** is also disposed on the axis of the cylindrical wall **10** and has one open end **90** mounted on a plate **92** which curves upwardly from the base end **82** and is provided with apertures **94** to permit the liquid body **36** to communicate with the region between the plate **92** and the base **82** of the container 8D, and hence have access to the interior of the stem **88**. The stem **88** is also opened at its opposite end **96**, and the end **96** has a protruding cylindrical portion **98** with a diameter slightly less than the diameter of the recess **88** of the cap **84**. The cylindrical portion **98** is translatably disposed within the recess **86**, but fits sufficiently snug to form a fluid seal. The cap **84** is also provided with a channel **100** which extends from the exterior thereof to confront the cylindrical portion **98** of the stem **88**.

If the cylindrical wall **10** is distorted to reduce the volume of the interior of the container 8D, the pressure of the entrapped air within the container forces the bellows region **26** to extend, thereby translating the cap **84** upwardly. Extension of the bellows **26** translate the cap **84** a sufficient distance to position the mouth of the channel **100** beyond the end **96** of the stem **88**. At the same time, the pressure differential between the interior of the container 8D and the ambient atmosphere causes the liquid body **36** within the container 8D to flow through the apertures **94** in the plate **92**, up the stem **88**, into the recess **86**, and through the channel **100**, thus dispensing the contents of the container 8D. When the distorting force is removed from the cylindrical wall **10** and the wall **10** resumes its cylindrical configuration, the pressure of the entrapped air within the container 8D will be less than atmospheric pressure as a result of discharge of part of the contents of the container. Hence, the bellows region **26** will be shortened as a result of this pressure differential. The cylindrical portion **98** of the stem **88** will be translated further into the recess **86** of the cap **84**, thus positioning the mouth of the channel **100** below the cylindrical portion **98** and confronting the portion of the stem **88** of smaller diameter than the cylindrical portion **98**. Air from the ambient atmosphere will then flow through the channel **100** and into the container 8D to cause the pressure within the container 8D to approach atmoshperic pressure. This action results in elongation of the bellows region **26** and restoring the rest or storage conditions.

FIGURE 10 illustrates a self-venting dispenser which is adapted to be positioned vertically on a table or the like, and which discharges from the side. In this embodiment of the invention, a container 8E is employed with a cylindrical pliant wall **10** and a bellows **26** mounted at one end of the container. The bellows **26** is sealed to a cap **28** of relatively rigid material. The end of the container remote from the bellows region **26** has a downwardly tapering bottom **102** provided with a circular central opening **104**. A cylindrical sleeve **106** extends downwardly from the container and is sealed about the opening **104**. An aperture **108** is disposed in the sleeve **106** adjacent to the opening **104**, and the end of the sleeve **106** remote from the opening **104** is provided with a fluid-tight enclosure **110**.

A rigid pin **30D** extends along the axis of the cylindrical wall **10** and is mounted at one end of the cap **28**. The other end of the pin **30D** is provided with a spherical expanded portion **114** which is disposed within the sleeve **106**. The expanded portion **114** is snugly disposed within the sleeve forming a fluid-tight seal therewith. In the storage position, the expanded portion **114** is disposed within the opening **104**.

When the wall **10** of the container 8E is distorted, the pressure of the entrapped air within the container exceeds atmospheric pressure forcing the bellows region **26** to extend. As a result, the expanded portion **114** which forms a seal in the rest position with the opening **104** is drawn upwardly into the container, thus permitting the contents of the container to be forced out through the sleeve **106** at its aperture **108**. The pressure of the entrapped air within the container 8E causes the contents **36** of the container to be expelled under pressure. When the distorting force is removed from the pliant wall **10**, the pressure of the entrapped air within the container falls below atmospheric pressure, thus retracting the bellows **26** and causing the pin **30D** to translate the expanded sphere **114** down the sleeve **106** and past the opening **108**. In this condition, air from the atmosphere may enter the container to tend to equalize the pressure of the entrapped air within the container and the ambient atmosphere. As this pressure differential diminishes, the expanded portion **114** of the pin **30D** is moved upwardly by the extension of the bellows region **26** until it seals in the opening **104** of the bottom **102**.

From the foregoing specification, those skilled in the art will readily devise modifications of the structures here disclosed and many applications for the present invention beyond those here set forth. It is therefore intended that the scope of the present invention be not limited by the foregoing specification, but rather only by the appended claims.

The invention claimed is:

1. A dispenser comprising a container adapted to be partially filled with the material to be dispensed and containing entrapped air, said container having a first region with a particular shape confined within a pliant wall, distortion of the shape of the first region decreasing the volume of the region, said container having a second region with a volume responsive to the ratio of the pressure of the entrapped air in the container to atmospheric pressure, said container having an opening adapted to discharge the contents from within the container, and a pin mechanically coupled to the second region of the container having a region translatably disposed within the opening of the container, said pin being translatable relative to the opening responsive to the volume of the second portion of the container, said region of the pin disposed within the opening having a protruding first portion with a cross section of similar shape to the opening and approximating the opening in size and a second portion disposed adjacent to the first portion and between the first portion and the second region of the container of smaller cross section than the first portion, the first portion being disposed in the opening when the ratio of pressures approximates unity, and being translatable out of the opening responsive to increases and decreases of the ratio.

2. A dispenser comprising the combination of claim **1** wherein the opening in the container is formed by a cylindrical channel and the first portion of the region of the pin within the opening has a curved cross section in the planes of the axis of the channel to form a contact with the channel approaching a line contact when disposed in the channel.

3. A dispenser comprising the combination of claim **1** wherein the first portion of the pin is cylindrical and the central axis thereof is disposed normal to the plane of the opening, and the container has a thickness at the opening smaller than the length of the first portion of the pin.

4. A dispenser comprising the combination of claim **3** wherein the container is provided with a nipple defining the opening of greater pliance than the pin.

5. A dispenser comprising a container having a central

axis provided with a pliant wall disposed symmetrically about the central axis, at least one bellows region disposed symmetrically about the central axis, and means defining an opening on the central axis of the container, a pin disposed on the central axis of the container having a protruding portion adapted to be slidably disposed in the opening and form a fluid-tight seal therewith, means extending between the pin and a portion of the bellows region remote from the opening mounting the pin on the container with the protruding portion of the pin disposed in the opening when the pressure within the container equals atmospheric pressure, said protruding portion being translatably into the container responsive to an increase in the pressure within the container and translatably out of the container responsive to a decrease in pressure in the container.

6. A dispenser comprising the combination of claim **5** wherein the container is provided with two bellows regions, one bellows region being disposed on each of the ends of the pliant wall.

7. A dispenser comprising the combination of claim **5** wherein the opening is disposed in a relatively rigid bottom of the container, and said container is provided with a sleeve having a cross section at least equal to that of the opening sealed about the opening and extending outwardly from the container about the central axis thereof, said sleeve having an aperture adjacent to the opening and being sealed remote from the opening, and the protruding portion of the pin being translatable in the sleeve.

8. A dispenser comprising the combination of claim **7** wherein the opening and sleeve have circular cross sections and the same diameters.

9. A dispenser comprising the combination of claim **8** wherein the protruding portion of the pin is generally spherical.

10. A dispenser comprising the combination of claim **5** wherein the pin is provided with a duct extending along the axis thereof and communicating at the end remote from the opening with the interior of the container, said pin having an expanded portion symmetrically disposed about the axis of the pin at its end adjacent to the opening and the duct opening to the container at the end adjacent the opening, said container having means defining a recess for translatably accommodating the expanded portion of the pin and the opening of the container being disposed in the surface of the recess confronting the expanded portion of the pin when the pressure within the container equals atmospheric pressure.

11. A dispenser comprising the combination of claim **10** wherein the recess of the housing has a cylindrical wall and the expanded portion of the pin has a cylindrical outer surface.

12. A dispenser comprising a container having a pliant exterior wall and an end provided with an aperture therein, the cross sectional area of said container in the region of the pliant wall changing with distortion of the shape of the pliant wall of the container, a pin disposed within the container aligned with the aperture and adapted to seal the container against fluid seepage through the aperture when disposed within the aperture, and actuating means having a second wall disposed between the interior of the container and the ambient atmosphere, said second wall being mechanically connected to the pin and movable responsive to pressure differences between the interior of the container and the ambient atmosphere, whereby inward deflection of the pliant wall of the container moves the second wall to translate the pin away from the aperture, and a valve disposed between the interior of the container and the ambient atmosphere, said valve being normally closed and opening responsive to a pressure within the container less than atmospheric pressure.

13. A dispenser comprising the combination of claim **12** wherein the valve is formed by the pin and aperture in the container, the aperture being an elongated cylindrical channel and the pin having a protruding portion slidably disposed within the channel and adapted to be translated exterior of the channel responsive to a pressure within the container less than atmospheric pressure.

14. A dispenser comprising the combination of claim **12** wherein the container has an orifice disposed on the central axis of the container opposite the opening, the pin being translatably disposed within the orifice, and the valve comprising a protuberance disposed on the pin exterior of the container and adapted to seal the orifice, and means operatively associated with the pin and container for spring biasing the pin to force the protuberance into abutment with the edges of the orifice, the spring bias asserted by said means between the pin and container being less than the force exerted by the ambient atmosphere for pressures within the container less than atmospheric pressures.

15. A dispenser comprising the combination of claim **14** wherein the spring bias means comprises a normally flat plate of resilient material mounted on the pin within the container and provided with curved ends abutting the end of the container remote from the opening.

16. A dispenser comprising the combination of claim **14** wherein the spring bias means comprises an integral part-cylindrical resilient segment extending from the pin having equal portions on opposite sides of the pin, the edges of the segment being in abutment with the end of the container remote from the opening.

17. A dispenser comprising the combination of claim **16** wherein the aperture of the container has a diameter smaller than the diameter of the pin confronting said aperture.

References Cited by the Examiner

UNITED STATES PATENTS

936,186	10/1909	Tellerson	222—213
1,794,086	2/1931	Miller	222—213
2,857,080	10/1958	Elias	222—213
3,087,656	4/1963	Dougherty	222—518

LOUIS J. DEMBO, *Primary Examiner.*

CHARLES R. CARTER, *Examiner.*