March 8, 1966 D. K. PORTER 3,238,831

FABRIC TRIMMER

Filed April 9, 1964 4 Sheets-Sheet 1

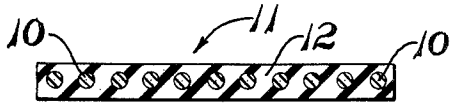


FIG. 1

FIG. 2

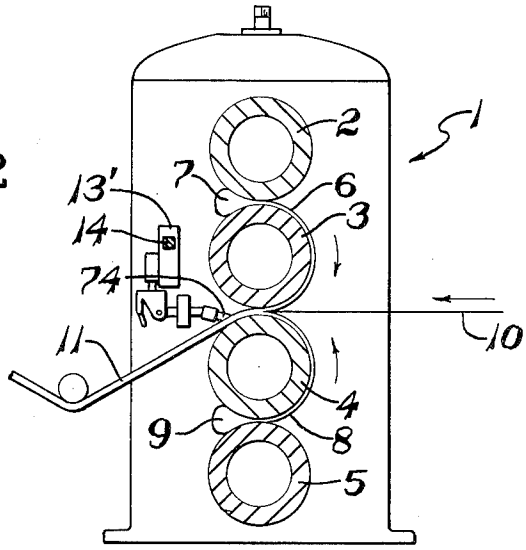


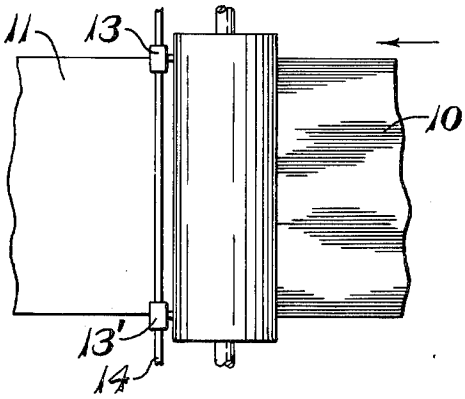


FIG. 3

INVENTOR.
DONALD K. PORTER
BY Joseph Januszkiewicz
ATTY.

March 8, 1966 D. K. PORTER 3,238,831

FABRIC TRIMMER

Filed April 9, 1964 4 Sheets-Sheet 2

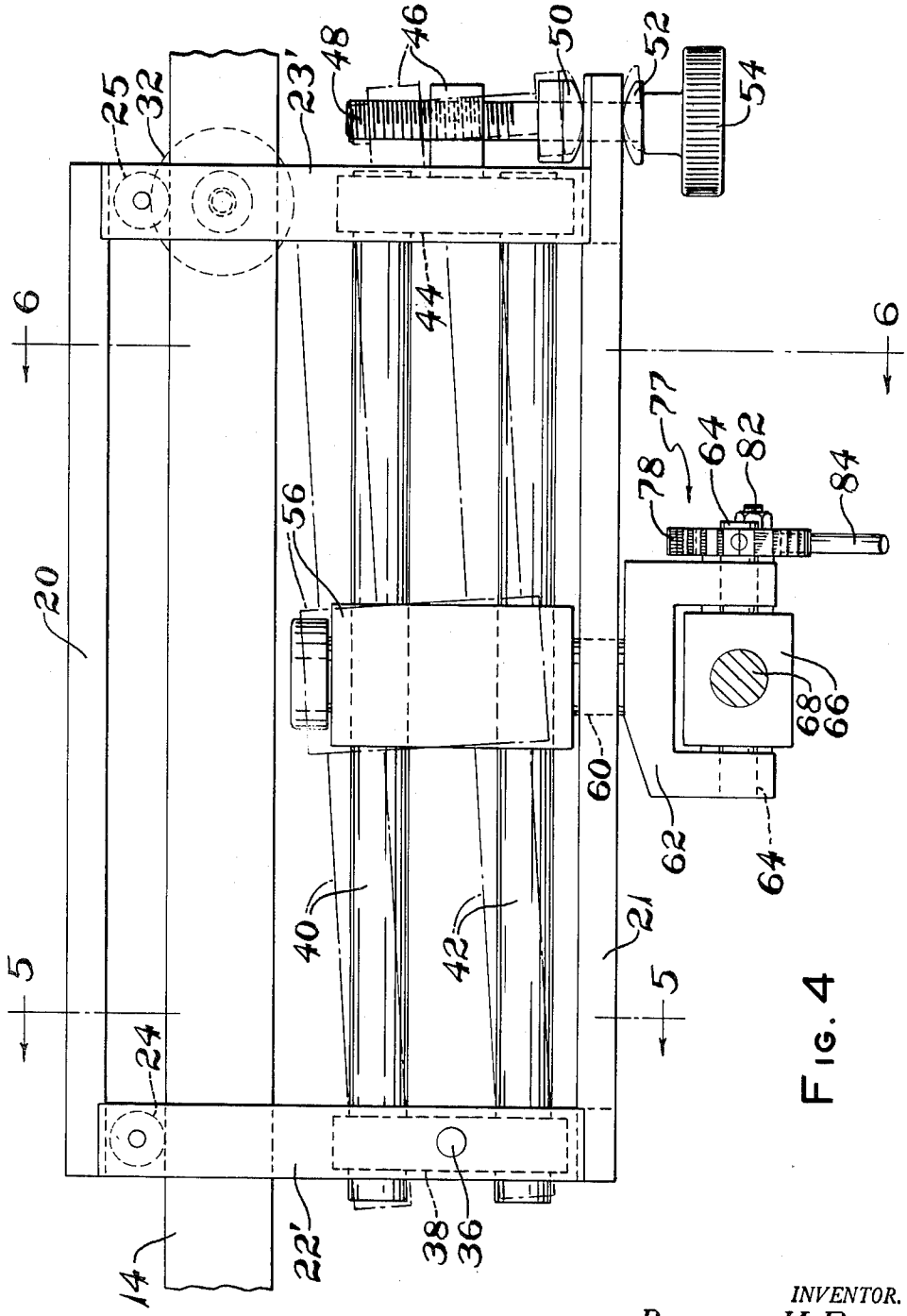


FIG. 4

INVENTOR.
DONALD K. PORTER
BY Joseph Januszkiewicz
ATTY.

March 8, 1966

D. K. PORTER

3,238,831

FABRIC TRIMMER

Filed April 9, 1964

4 Sheets-Sheet 3

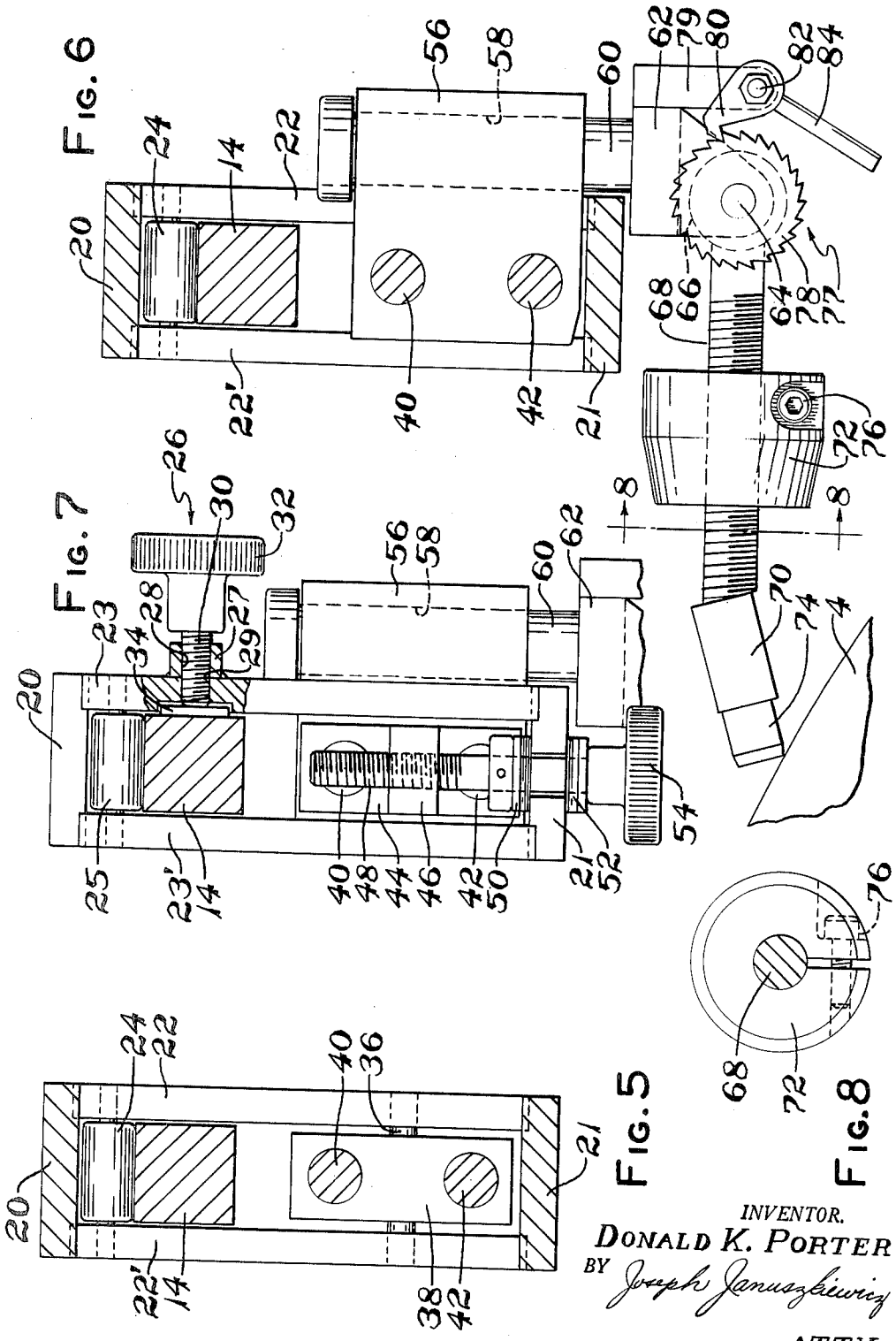


INVENTOR.
DONALD K. PORTER
BY Joseph Januszkiewicz
ATTY.

FIG. 10

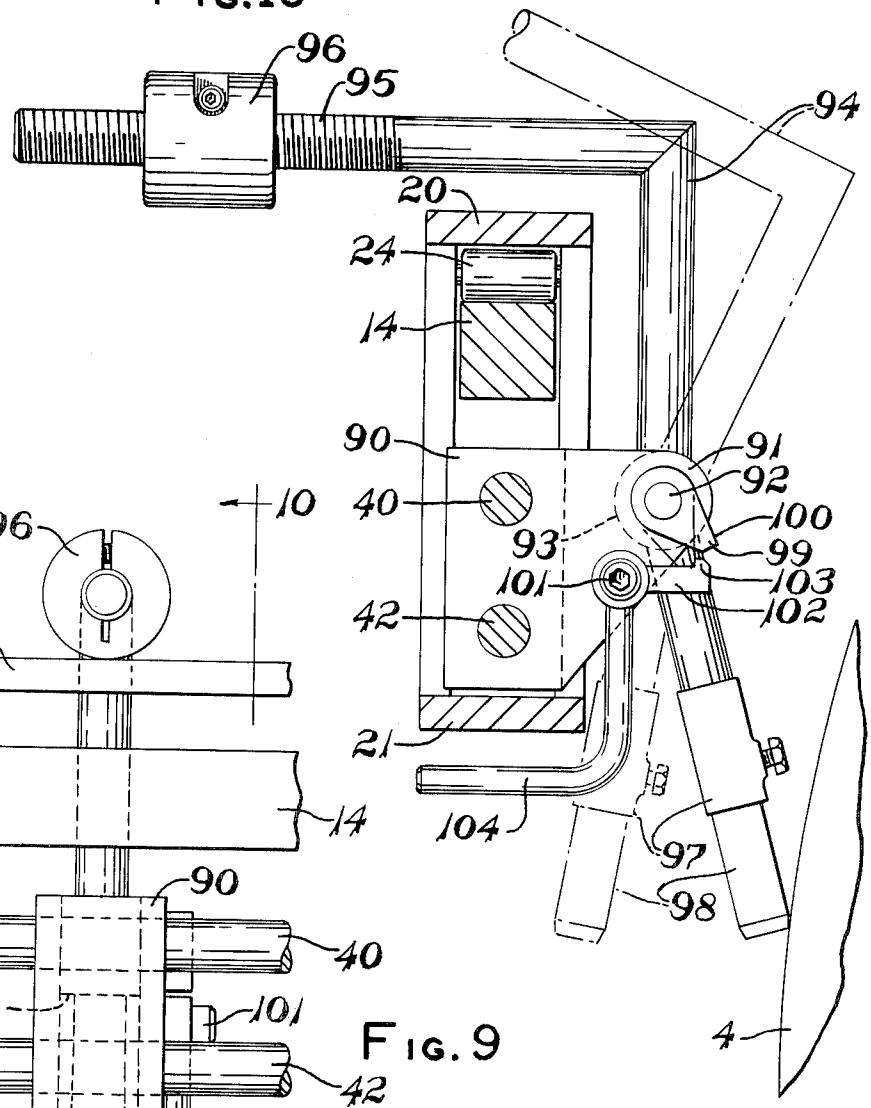


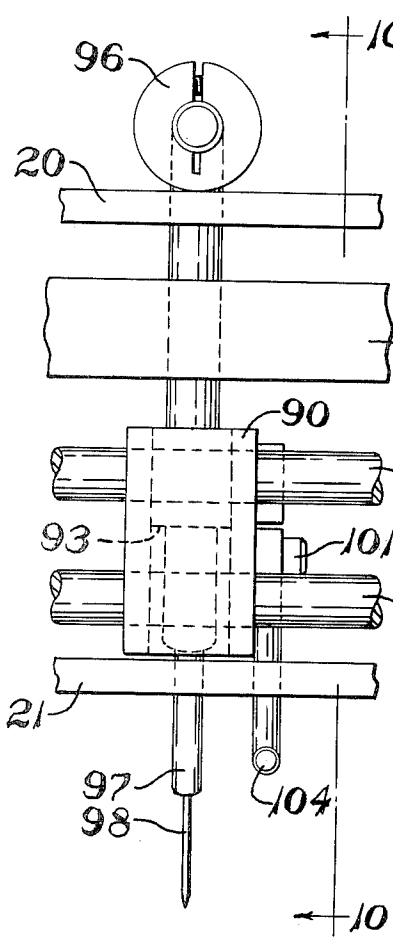


FIG. 9

INVENTOR.
DONALD K. PORTER
BY Joseph Januszkiewicz
ATTY.

United States Patent Office

3,238,831

Patented Mar. 8, 1966

1

# 3,238,831
# FABRIC TRIMMER

Donald K. Porter, Cuyahoga Falls, Ohio, assignor to The B. F. Goodrich Company, New York, N.Y., a corporation of New York

Filed Apr. 9, 1964, Ser. No. 358,463
10 Claims. (Cl. 83—433)

This invention relates to a trimmer and more particularly to an edge gum trimmer unit for use in trimming the respective side edges of a sheet of rubber coated fabric.

In applying freshly sheeted rubber to continuously moving parallel strands of fabric, it is highly desirable to provide a finished cord fabric which leaves the calender rolls with the strands parallel and surrounded by unvulcanized rubber such that the respective parallel side edges of the fabric are trimmed cleanly and closely to the edge cords. It is desirable to maintain an accurate proportion of rubber to cord within the fabric as well as at the respective edges to assure consistent quality in strength and resiliency throughout the fabric. Since such fabric is biased cut and spliced at the ends by successive short strips, it is essential that the respective joined edges be properly coated to assure consistent spacing of rubber and strands to avoid irregularity and imbalance of the finished tire.

The present invention contemplates the accurate trimming of the respective side edges of coated fabric as it leaves the calender rolls to assure consistency in spacing of cords throughout an assembled bias cut fabric.

It is an object of this invention to provide a new and improved trim cutter.

It is a further object of this invention to provide means for accurately maintaining a predetermined amount of coating on the edges of a coated fabric.

Still another object of this invention is to provide a trim cutter which accurately trims over a wide lateral range the excess gum from a coated fabric.

A further object of this invention is to provide a consistent pressure over a wide lateral range of a fabric that has its side edges trimmed along a longitudinally extending direction.

With these and other objects in view, as will hereinafter be more particularly pointed out in the appended claims, reference is now made to the following description taken in connection with the accompanying drawings in which:

FIG. 1 is a diagrammatic cross section of the rubberized fabric.

FIG. 2 is a diagrammatic cross-section view of a conventional four-roll calender machine showing an edge trimmer generally.

FIG. 3 is a diagrammatic plan view of a calender machine showing a pair laterally spaced edge trimmers.

FIG. 4 is an enlarged front elevational view of the edge trimmer.

FIG. 5 is a cross-sectional view of the edge trimmer taken along line 5—5 of FIG. 4.

FIG. 6 is a cross-sectional view of the edge trimmer taken along line 6—6 of FIG. 4.

FIG. 7 is a side elevational view of the edge trimmer shown in FIG. 4 with a portion thereof broken away for clarity.

FIG. 8 is a front elevational view taken along line 8—8 of FIG. 6.

FIG. 9 is a cross-sectional view of a modified edge trimmer similar to FIG. 6 for use on a Z-type of calender roll arrangement.

FIG. 10 is a front elevational view of the edge trimmer shown in FIG. 9, taken along line 10—10 of FIG. 9.

Referring to FIGS. 1–3, a calender apparatus designated generally as 1 comprises vertically spaced standards which support calender rolls 2, 3, 4 and 5. A sheet of rubber 6 is formed on the roller 3 from a bank of stock 7 between the rollers 2 and 3, and a similar sheet of rubber 8 is formed on the roller 4 from a bank of stock 9 between the rollers 4 and 5. Suitable means not shown direct properly spaced strands of cords of rayon, nylon, cotton, wire or similar materials designated generally 10, that have been dipped in specially formulated liquid rubber compounds and tension dried, to the bight portion of rolls 3 and 4. The calender rolls 3 and 4 are so spaced with respect to each other and space therebetween so proportioned to the thickness of the sheets 6 and 8 and the diameter of the strands of cords that the sheets can be brought together, and forced together between the strands to make a rubberized fabric 11. Fabric 11 as shown in FIG. 1 comprises individual strands of cord 10 and a homogeneous rubber coating 12 around and between the cords due to the pressure of the calender rolls.

2

As the fabric 11 (FIG. 3) emerges from the calender rolls, a pair of laterally spaced edge trimmers 13, 13′ mounted on a spacer bar 14 that is suitably attached to the standards of the calender apparatus operates to trim the respective laterally spaced edges of the fabric 11 to provide a rubberized fabric 11 that has the respective side edges trimmed cleanly and closely to the edge cords.

The respective edge trimmers 13 and 13′ are similar in all respects except for being of opposite hand. The edge trimmer 13 comprises an upper support bar 20 and a lower support bar 21 suitably connected at their respective end portions by pairs of laterally spaced vertically extending braces 22, 22′ and 23, 23′. The upper end portions of the respective braces 22, 22′ and 23, 23′ rotatably support roller units 24 and 25. The roller units 24 and 25 are in rolling contact with the spacer bar 14 such that the edge trimmer 13 may be adjusted thereon. In order to lock the edge trimmer 13 onto bar 14, lock means 26 is mounted on the vertical extending brace 23. Brace 23 has a boss 27 suitably mounted on the upper end portion thereof. Boss 27 has a threaded bore 28, which threaded bore 28 is in alignment with a threaded bore 29 on brace 23 to thereby accommodate a lock screw 30. One end of screw 30 has a handle 32 secured thereto for rotating such lock screw 30. The other end of screw 30 supports a pressure plate 34 whereby rotation of handle 32 operates to release or exert pressure via plate 34 onto bar 14 to thereby accommodate the locking of edge trimmer 13 thereon.

As shown in FIGS. 4 and 5, the lower end portions of braces 22 and 22′ support a shaft 36 which shaft 36 pivotally supports a rectangular shaped support block 38. Block 38 has a pair of vertically spaced bores, which bores receive respectively one end of generally horizontally extending rods 40 and 42. The other end of rods 40 and 42 are connected to a vertically adjustable block 44. Block 44 has a laterally extending projection 46 which threadedly receives an adjusting screw 48. Screw 48 has its lower end extending through vertically spaced cam members 50 and 52 and connected to a handle 54 for rotation thereof. Cam members 50 and 52 abuttingly contact lower support bar 21, such that rotation of screw 48 operates to raise or lower block 44 and thereby impart the desired degree of slant to the rods 40 and 42.

Slidably mounted on rods 40 and 42 for movement in a rectilinear direction is a crosshead 56. Crosshead 56 is adapted to slide on rods 40 and 42 on stainless steel ball bushings for unrestricted movement between the limits of the vertically extending braces 22 and 23. Crosshead 56 has a vertical bore 58 which pivotally suports a shaft 60. Journalled on the lower end of shaft 60 for pivotally moving therewith is a bifurcated support mem-

ber 62. Support member 62 pivotally supports a shaft 64 on which is keyed a boss 66. Boss 66 supports a longitudinally extending threaded rod 68 on which is mounted a knife holder 70 and an annular counterweight 72. A knife blade 74 is suitably mounted in knife holder 70. Counterweight 72, split as shown in FIG. 8, is adjustably mounted on the threaded rod 68 and locked in its adjusted position thereon via a threaded screw 76 which extends through a bore connecting the respective split portions. Counterweight 72 exerts a downward force on the rod 68 and knife 74 to maintain knife 74 in cutting engagement with the rubberized fabric 11. A ratchet means 77, mounted on shaft 64, is adapted to maintain knife 74 out of engagement with the fabric 11. Ratchet means 77 comprises a serrated disc 78 keyed to shaft 64 for pivotal movement therewith. A bracket 79 extending downwardly from support member 62 has a latch member 80 pivotally mounted on a shaft 82. Shaft 82 has a handle 84 secured thereto to provide means for rotating shaft 82 and the latch member 80 such as to pivot the outer end portion of latch member 80 into abutting engagement with serrated disc 72 to lock disc 78, shaft 64, rod 68 and knife 74 in a preselected position whereby knife 74 is out of contact with the fabric 11.

In operation the edge trimmers 13 and 13′ assume a continuously moving sheet of rubberized fabric 11 from calender apparatus 1 with such trimmers 13 and 13′ operating on the respective edges of such fabric 11. Since the edge trimmers 13 and 13′ are similar in all respects except being of opposite hand, only the operation of edge trimmer 13 will be described. Initially, handle 32 of lock means 26 is rotated to release pressure plate 34 from spacer bar 14 to permit manual rectilinear movement of edge trimmer 13 to its desired location of operation. Handle 32 is then rotated to lock the pressure plate 34 against bar 14 which locks the edge trimmer 13 in position. Thereafter, crosshead 56 is positioned by inclining rods 40 and 42. Handle 54 is rotated to move block 44 vertically upward which as viewed in FIG. 4 slants rods 40 and 42 downward from right to left. Such elevation of rods 40 and 42 causes crosshead 56 to slide from right to left as viewed in FIG. 4, and to slide toward the longitudinal center line of sheet fabric 11 as viewed in FIG. 3. The rod 68 along with knife 74 is positioned adjacent the outer strand of cord such that the slant of the rods 40 and 42 maintains sufficient lateral pressure on the knife to cut evenly the rubberized edge adjacent the outer strand of cord. To assure that knife 74 remains in contact with the sheet of rubberized fabric 11, counterweight 72 is adjusted longitudinally on rod 68 in the manner described above to provide sufficient downward force on knife 74 to maintain the desired contact. In those instances where it is desired to move knife 74 away from the sheet of fabric 11, rod 68 and knife 74 are moved clockwise as viewed in FIG. 6. Handle 84 is then rotated counterclockwise as viewed in FIG. 6 to pivot the outer end portion of latch member 80 into abutting engagement with serrated disc 78 to lock the knife 74 and its associated parts away from the sheet fabric.

FIG. 10 discloses a modification of the above-described crosshead 56 for use on Z-calenders wherein a crosshead 90 is slidably mounted on rods 40 and 42 for unrestricted movement in a rectilinear direction thereon in a similar manner as crosshead 56. The forward portion of crosshead 90 has a bifurcated portion 91 which pivotally journals as at 92 a boss 93 to which is connected an inverted L-shaped rod 94. One end portion of rod 94 is threaded as at 95 to receive a counterweight 96 while the other end portion of rod 94 has a tool holder 97 secured thereto. Tool holder 96 has a blade 98 suitably mounted therein. Boss 93 is keyed to pivot means 92, which pivot means 92 carries a stop member 99 having a shoulder 100 thereon. Pivotally mounted as at 101 on portion 91 of crosshead 90 is a pawl 102 having a projection 103. Pawl 102 has a handle 104 connected thereto for manually moving pawl 102.



The operation of crosshead 90 is similar to that of crosshead 56 except that the means for retaining the blade 97 out of contact with the fabric is the pivoting of rod 94 clockwise about pivot means 92 as viewed in FIG. 10 until shoulder 100 abuttingly engages projection 103 on pawl 102. To release the blade for cutting, handle 104 is rotated clockwise about pivot means 101 to disengage shoulder 100 from projection 103 such that the counterweight 96 pivots rod 94 counterclockwise as viewed in FIG. 10 about pivot means 92 until blade 98 engages the fabric to be trimmed. The cutting pressure on blade 98 can be adjusted by rotating counterweight 96 on threaded portion 95 of rod 94 until the proper desired force is obtained.

Obviously many modifications and variations of the present invention are possible in the light of the above teachings. It is therefore to be understood, that within the scope of the appended claims, the invention may be practiced otherwise than as specifically described.

I claim:

1. An edge trimmer comprising a support frame adapted to be connected to a calender apparatus which processes a sheet of continuously moving material having a longitudinal center line, said support frame having a crosshead mounted on said frame for unrestricted movement toward and away from such longitudinal center line, said crosshead having a cutter mounted thereon for engagement with such sheet of material, and adjusting means on said support frame operatively connected to said crosshead providing a preselected constant lateral force on said crosshead irrespective of the lateral movement of said crosshead toward said longitudinal center line.

2. An edge trimmer comprising support means, guide means mounted on said support means, a crosshead slidably mounted on said guide means, said crosshead having a trim cutter mounted thereon, means mounted on said support means operatively connected to said guide means for adjusting the inclination of said guide means relative to said support means whereby said crosshead exerts a greater force on said trim cutter in accordance to the degree of inclination of said guide means.

3. An edge trimmer as set forth in claim 2 wherein said trim cutter comprises a threaded rod pivotally connected to said crosshead, a counterweight threadedly connected to said rod for adjustment thereon, and a cutter blade mounted on the end of said rod for engagement with material guided thereby.

4. An edge trimmer as set forth in claim 3 wherein said crosshead has means for locking said rod and said cutter blade in preselected rotated positions.

5. An edge trimmer comprising support means, guide means mounted on said support means, a crosshead slidably mounted on said guide means, means mounted on said support means operatively connected to said guide means for adjusting the inclination of said guide means relative to said support means whereby said crosshead exerts a greater force on said trim cutter in accordance to the degree of inclination of said guide means, said crosshead having a tool support pivotally mounted thereon, said tool support having a treaded rod pivotally secured thereto, a counterweight threadedly mounted thereon for movement thereon to vary the force on said rod, a cutter blade mounted on the end of said rod for engagement with material guided thereby, and said crosshead having latch means cooperative with lock means on said tool support for securing said tool support and said cutter blade in predetermined positions to thereby maintain said cutter blade out of engagement with material fed adjacent thereto.

6. An edge trimmer comprising support means adjustably mounted on a horizontally extending bar, said support means having guide means coplanar with said bar, one end of said guide means being pivotally mounted

on one end portion of said support means, means on the other end portion of said support means for adjusting the inclination of said guide means relative to said bar, a tool support slidably mounted on said guide means, and said tool support having a blade connected thereto for trimming material guided thereby.

7. An edge trimmer for cooperative use on a horizontally extending bar adapted to be connected to a calender apparatus, support means adjustably mounted on said horizontally extending bar, said support means having guide means extending in a generally horizontal direction, one end of said guide means being pivotally mounted on one end portion of said support means, means on the other end portion of said support means operatively connected to said guide means for adjusting the inclination of said guide means relative to said bar, a crosshead slidably mounted on said guide means, said crosshead having a vertically extending pivot means supporting a tool support, said tool support having a boss pivotally mounted thereon for movement about a horizontal shaft, a rod mounted on said boss for pivotal movement therewith, a counterweight adjustably mounted on said rod, and said rod having a cutter blade mounted thereon.

8. An edge trimmer comprising a horizontally extending crossbar adapted to be connected to a calender apparatus, a support frame slidably mounted on said crossbar, means for securing said support frame on said crossbar, said support frame having spaced end portions, a first block pivotally mounted on one end portion of said support frame, a pair of horizontally extending guide rods secured to said block for pivotal movement therewith, a second block mounted on the other end portion of said support frame having said guide rods connected thereto, means on said support frame operatively connected to said second block for vertically adjusting said second block to thereby adjust the slant on said guide rods and pivotally adjust said first block, and a tool support crosshead slidably mounted on said guide rods for movement thereon.

9. An edge trimmer comprising a horizontally extending crossbar adapted to be connected to a calender apparatus, a support frame adjustably mounted on said crossbar, said support frame having spaced end portions, a first block pivotally mounted on one end portion of said support frame, a pair of horizontally extending guide rods secured to said block for pivotal movement therewith, a second block mounted on the other end portion of said support frame having said guide rods connected thereto, means on said support frame operatively connected to said second block for vertically adjusting said second block, a tool support slidably mounted on said guide rods, a vertically extending rod having a pivotal



mounting on said tool support wherein said pivotal mounting has an axis parallel to said guide rods, a cutter blade support attached to one end of said vertically extending rod, and a counterweight adjustably attached to the other end of said vertically extending rod to pivot said blade holder toward a calender roll for supporting a blade held by said cutter blade support against a calender roll.

10. An edge trimmer comprising a horizontally extending crossbar adapted to be connected to a calender apparatus which processes a sheet of continuously moving material having a longitudinal center line, a support frame slidably mounted on said crossbar, lock means on said support frame operatively connected to said crossbar for securing said support frame to said crossbar, said support frame having spaced end portions, a first block pivotally mounted on one of said end portions, a second block mounted on the other of said end portions for movement in a vertical direction, means on said support frame operatively connected to said second block for adjusting said second block in a vertical rectilinear direction, guide bars operatively connecting said blocks to impart an inclination to said guide bars upon relative movement of said second block by said adjusting means on said support frame, a crosshead slidably mounted on said guide means, a vertically extending shaft mounted on said crosshead for freely pivotal movement, a tool support mounted on said vertically extending shaft for movement therewith, a horizontally extending pivot shaft pivotally mounted on said tool support, a boss secured to said horizontally extending shaft for movement therewith, a threaded rod mounted on said boss, cutting means mounted on said threaded rod, a counterweight adjustably mounted on said threaded rod, and latch means movably mounted on said tool support for locking engagement with latch means secured to said horizontally extending shaft.


**References Cited by the Examiner**

UNITED STATES PATENTS

| | | | |
|---|---|---|---|
| 1,299,335 | 4/1919 | Hazeltine | 83—433 X |
| 1,575,616 | 3/1926 | Brundage | 83—433 X |
| 1,602,746 | 10/1926 | Bowden | 83—434 X |
| 1,762,826 | 6/1930 | Lehman | 83—433 X |
| 2,705,049 | 3/1955 | Brooks | 83—434 X |
| 2,987,948 | 6/1961 | Casullo | 83—434 X |
| 3,008,864 | 11/1961 | Macklem et al. | 83—428 X |
| 3,073,197 | 1/1963 | Gowin | 83—433 X |


WILLIAM W. DYER, SR., *Primary Examiner.*

J. M. MEISTER, *Assistant Examiner.*