Dec. 7, 1965 J. C. MELLINGER 3,221,417

MOISTURE SENSOR CONTROL DEVICE FOR A LAUNDRY DRIER

Filed Dec. 30, 1963 4 Sheets-Sheet 1

Fig. 1

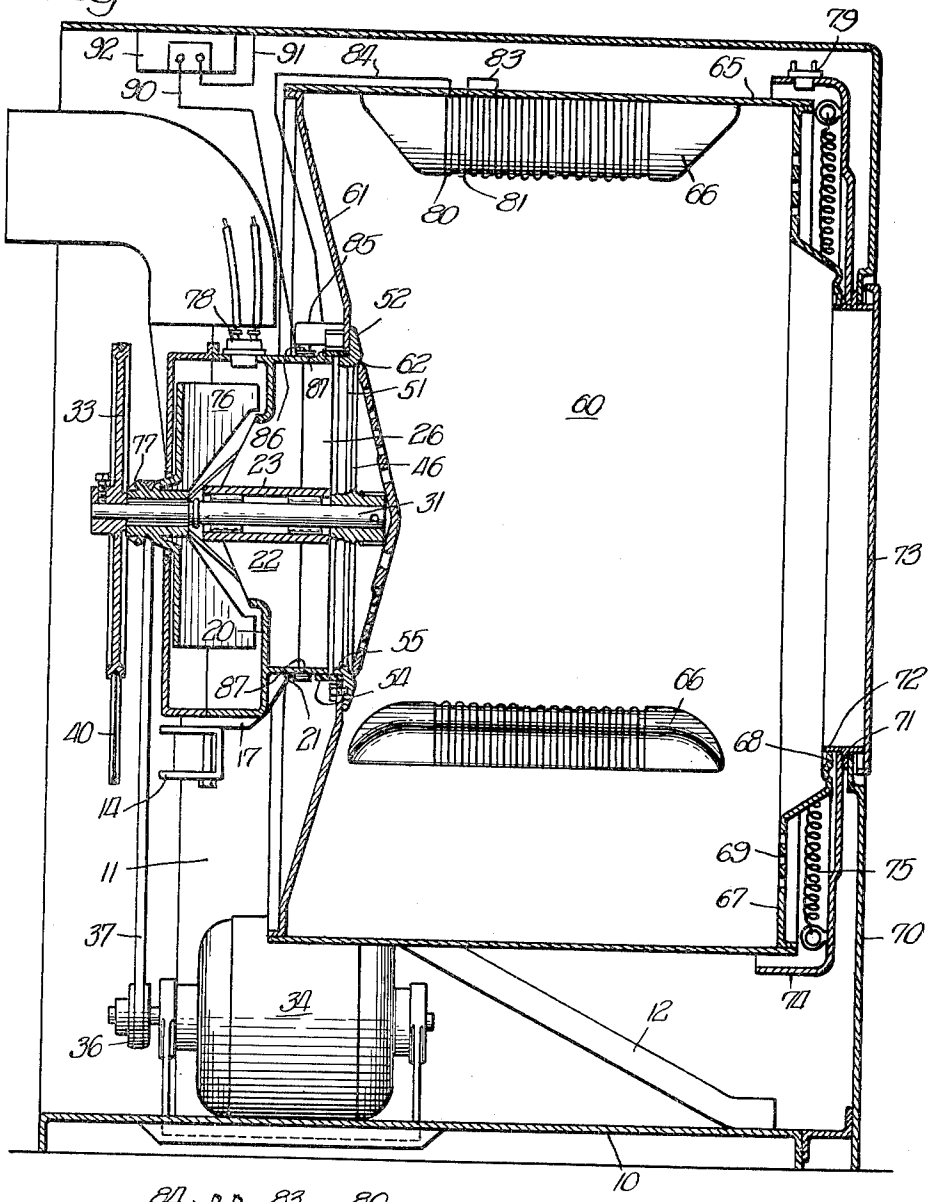

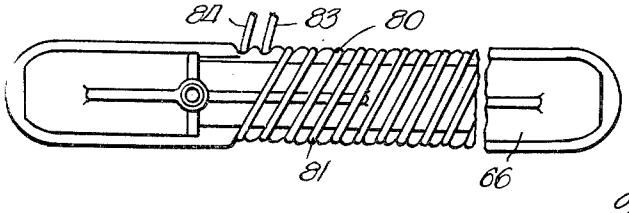

Fig. 2.

INVENTOR.
John C. Mellinger,
BY
William A. Landwier
AGENT

MOISTURE SENSOR CONTROL DEVICE FOR A LAUNDRY DRIER

Filed Dec. 30, 1963 4 Sheets-Sheet 2

Fig. 3

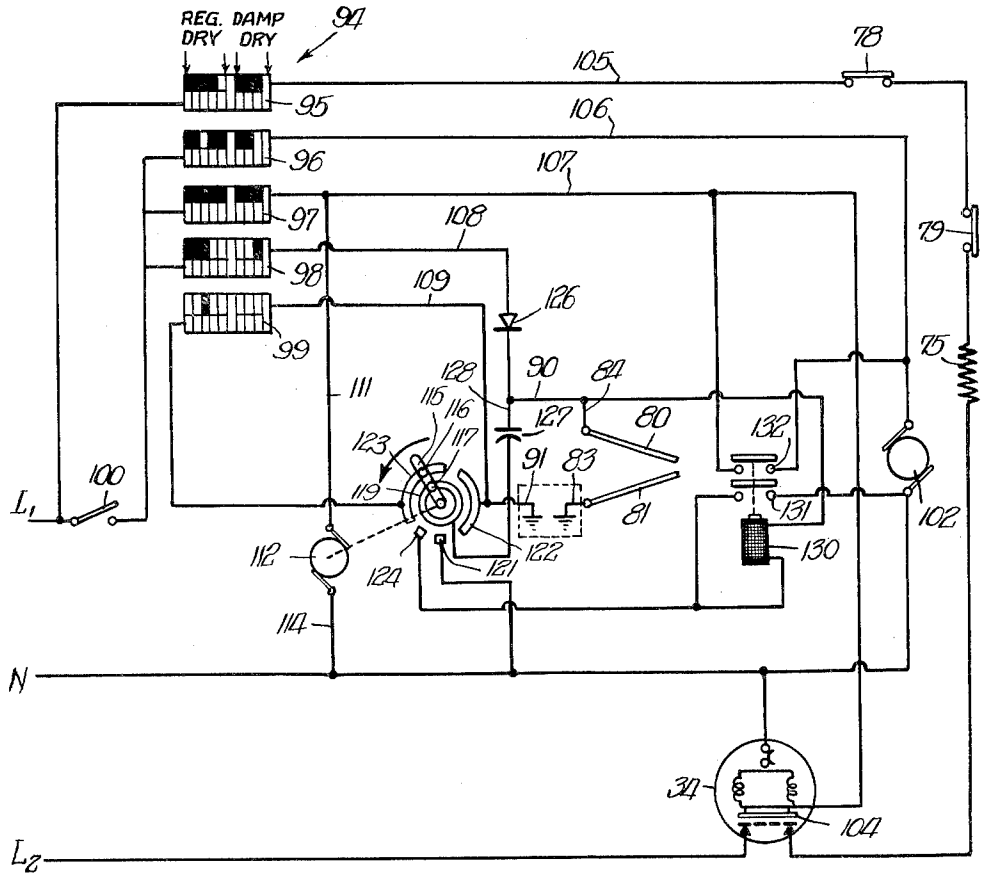

INVENTOR.
John C. Mellinger,
BY
William G. Landwier
AGENT

MOISTURE SENSOR CONTROL DEVICE FOR A LAUNDRY DRIER

Filed Dec. 30, 1963 4 Sheets-Sheet 3

Fig. 4

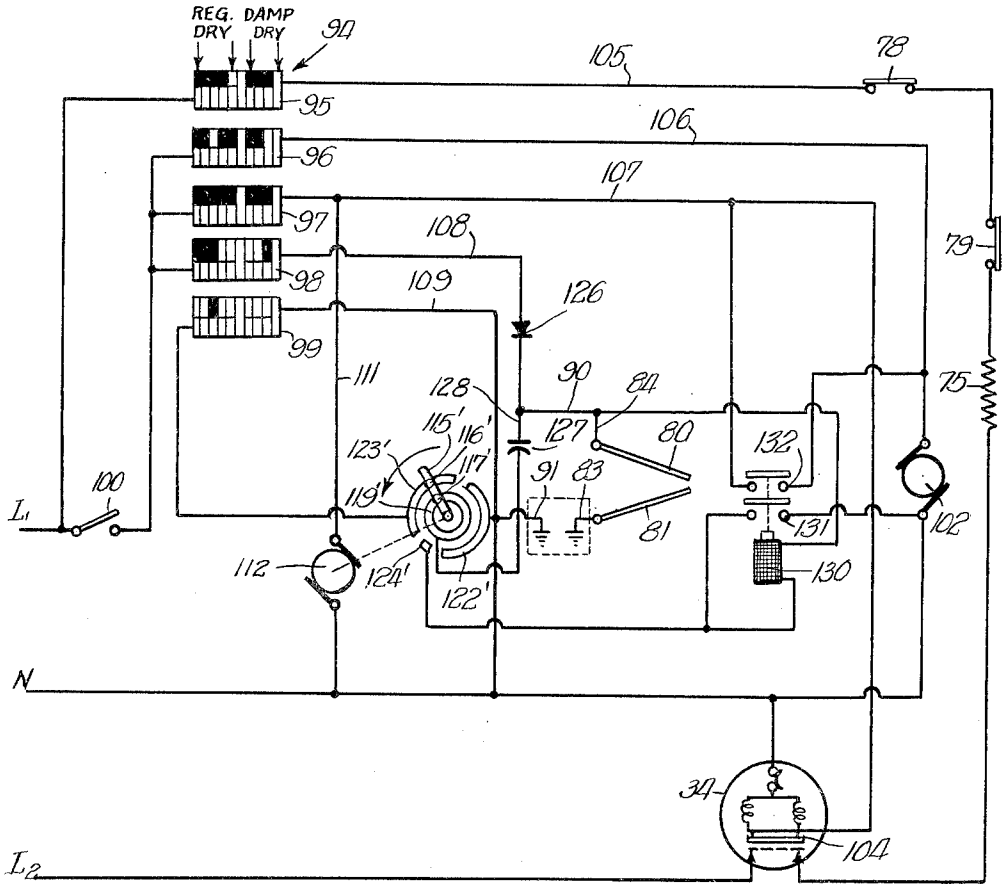

INVENTOR.
John C. Mellinger,
BY
William G. Landwier
Agent.

MOISTURE SENSOR CONTROL DEVICE FOR A LAUNDRY DRIER

Filed Dec. 30, 1963 4 Sheets-Sheet 4

Fig. 6

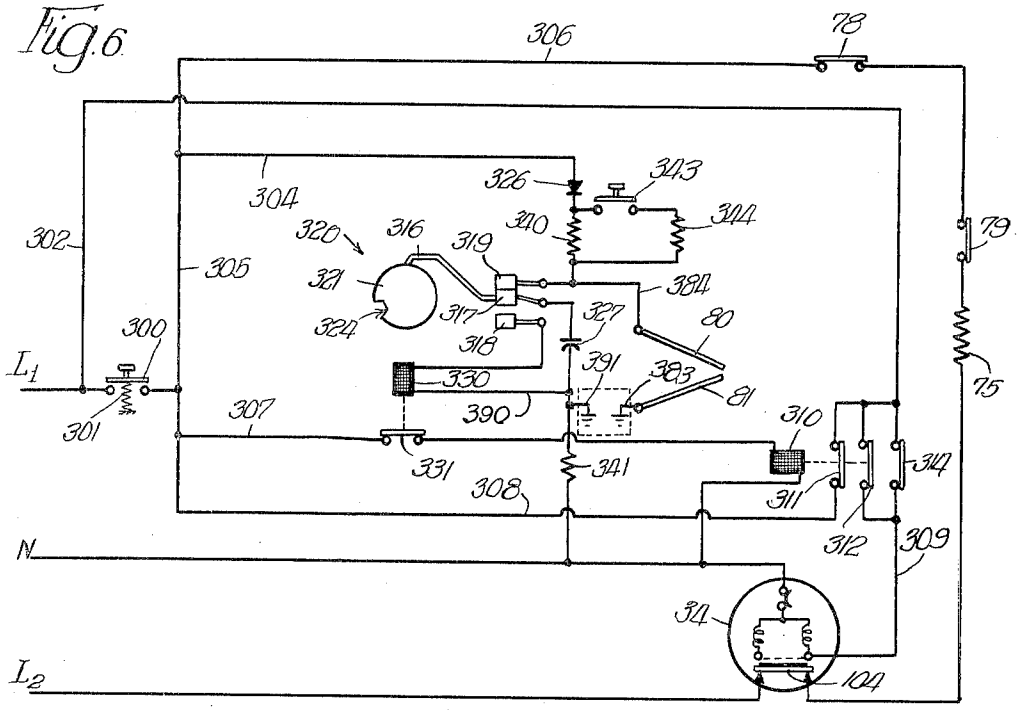

Fig. 5

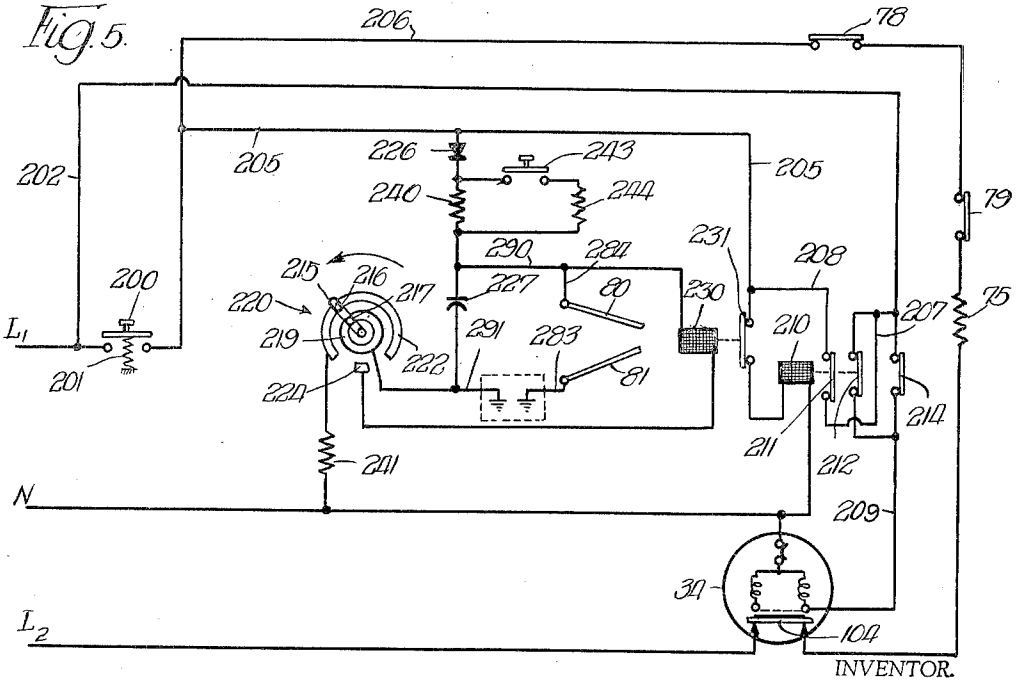

INVENTOR.
John C. Mellinger,
BY
William G. Landwier
Agent.

United States Patent Office

3,221,417

Patented Dec. 7, 1965

1

3,221,417
MOISTURE SENSOR CONTROL DEVICE FOR A LAUNDRY DRIER

John C. Mellinger, Newton, Iowa, assignor to The Maytag Company, Newton, Iowa, a corporation of Delaware

Filed Dec. 30, 1963, Ser. No. 334,086
16 Claims. (Cl. 34—45)

This is a continuation-in-part of my copending application Serial No. 39,062 filed June 27, 1960, now abandoned.

This invention relates to a control system for automatically controlling termination of the drying operation of fabrics after the fabrics have reached a predetermined degree of dryness, and more particularly, to a device responsive to the electrical resistance, or conductivity, of fabrics for discontinuing the drying operation.

Many control systems for domestic clothes driers have been previously attempted in an effort to obtain automatic termination of the drying operation in a domestic clothes drier after the fabrics have reached the desired dryness. One of the major problems facing any automatic control system is the difficulty in obtaining consistently completely dried loads of mixed fabrics as found in the home laundry, since different fabrics vary in their moisture retentivity. In addition, some fabrics have both light and heavy, thin and thick sections, to further complicate the problem.

One type of control depends upon the change in conductivity of the fabrics as the moisture is removed in order to discontinue operation of a drying machine at the moment electrical conductivity of the fabrics, as instantaneously sensed directly between conductors in the drum, attains a predetermined value. This type of control causes premature shut-off of the machine before the clothes are completely dry, especially of mixed loads, which frequently occur in the home, because some of the pieces dry long before others, and the wet pieces when enclosed in, or shielded by, drier pieces causes premature shut-off of the machine due to the instantaneous response. In this type of control, since the drier operates only if a damp fabric is continuously contacting the electrodes, or probes, within the drier drum contact a damp piece, the control immediately will operate to institute termination of drying. For this reason it is unreliable, and therefore unsatisfactory for home laundry use.

In another type of control humidity of the air within the drier is measured to determine when the drying operation should be terminated, instead of relying upon the electrical conductivity of the fabrics. Humidity determinations are an unreliable index of the condition of the fabrics, and control systems dependent thereon contain an inherent deficiency.

Attempts have been made to control the termination of the drying period by thermostats in the drier. The thermostats operate to shut-off the heaters when the temperature within the drying cabinet rises above a set value which occurs when most of the clothes have been dried. This type of control does not insure, however, that all of the fabrics have been dried.

It is, therefore, an object of the present invention to provide a control system for a clothes drier responsive to the dry condition of the fabrics being treated. It is a further object of the invention to provide a system for controlling termination of a drying operation that is responsive to the isolated fabrics in a load, so as to obtain reliable shut-off of the drying operation. It is a still further object of the invention to provide a system whereby direct response of the control to the dryness or conductivity of fabrics is made practical or feasible for home laundry clothes driers. It is another object of the invention to provide a control system having a manually operable

2

preselection adjustment which initiates termination of the drying operation when the clothes have reached the manually preselected condition of dryness, for example, when the fabrics are in damp dry condition suitable for ironing. Further objects and advantages of this invention will become evident as the description proceeds and from an examination of the accompanying drawings which illustrate several embodiments of the invention and in which similar numerals refer to similar parts throughout the several views.

In the drawings:

FIGURE 1 is a view in vertical section, partly broken away, illustrating a drier which incorporates the control system of the invention;

FIGURE 2 is a bottom view of one of the baffles shown in the drum of the drier in FIGURE 1, illustrating the location of the electrodes;

FIGURE 3 is a schematic diagram of a preferred circuit employing the principles of the control system of the present invention;

FIGURE 4 is a schematic diagram of a modified form of circuit embodying the principles of the control system of the present invention;

FIGURE 5 is a schematic diagram of another form of circuit embodying the principles of the control system of the present invention; and

FIGURE 6 is a schematic diagram of yet another form of circuit embodying the principles of the control system of the present invention.

Briefly described the present invention relates to a control system for testing the moisture content of articles by measuring their electrical resistance, or conductivity. The electrical condition of the articles is determined by capacitor that is charged from a power source and discharged through the articles contacting the electrodes.

FIGURE 1 of the accompanying drawings illustrate a clothes drier having a base frame **10** which serves as a support for upstanding channel base members **11** and **12** which together with cross piece **14** support the hollow blower housing casting **17**. Housing **17** includes a tubular portion **21**, a divider wall **20** having a rearwardly flared inner portion defining an intake into an impeller chamber, and radially directed longitudinal webs **22** which converge toward each other to provide a retainer member **23**. A passageway **26** is located between the tubular portion **21** and the bearing retainer member **23** which transverses the supporting webs **22**.

Journalled within member **23** is a revoluble drum drive shaft **31** which projects from both ends of the housing **17**. Affixed to drum drive shaft **31** at the rear of the cabinet is a large pulley **33** which is driven by motor **34** through motor pulley **36**, main drive belt **37**, a speed reduction system (not shown) and belt **40**.

The opposite or forward end of the drum drive shaft **31** is rigidly connected to the drum spider member **46** which has radiating spokes **51** that support rim **52**. A heat resistant sealing member **54** encircles the front periphery of blower housing **17** and the circular shoulder **55** located on the rear portion of drum spider **46**.

A horizontally mounted tumbling drum **60** has a rear wall **61** which is secured to rim **52** for support and rotation by shaft **31**. Rear drum wall **61** is imperforate except for a central exhaust opening **62**.

The periphery of rear wall **61** is flanged to form a supporting shoulder for the imperforate cylindrical side wall **65** which carries the clothes elevating vanes **66** for tumbling clothing within drum **60** during rotation of the latter member. Cylindrical side wall **65** is connected to the front drum wall **67**.

Front wall **65** has a centrally located access opening **68** and a circular perforate portion **69** located concentrically to access opening **68**. This perforate portion **69**, formed

by several concentric rows of holes, serves as the air intake into drum 60.

The cabinet 70 which is fastened to base frame 10 and which encloses the entire drying mechanism has an access opening 71 aligned to drum access opening 68 thereby allowing both of openings 68 and 81 to receive the door gasket 72. The door 73 is hinged and forms an airtight seal with gasket 72.

Fastened to cabinet 70 is the shroud or cowling member 74. Located between shroud 74 and the front drum wall 67 is an open coil electric heating element 75 which extends completely around the inside of cowling member 74 to raise the temperature of air passing through perforate portion 69 in the front drum wall 67. It will be understood that a gas heater may be used in place of the electrical element.

Air flow into drum 60 through the perforate area 69 and into the blower housing 17 is produced by rotation of the revoluble impeller member 76 located in blower housing 17. Fan pulley 77 is connected to the driving motor 34 by main drive belt 37. The blower housing casting 17 supports a cycling thermostat 78 which is connected in series with the heating element 75 in order to maintain the interior of drum 60 at the proper selected drying temperature. In practice, this switch is set to open at approximately 135°.

Also connected in series with the heating element 75 is the high limit switch 79 which is mounted on an upper part of shroud member 74 so as to disconnect heating element 75 from its source of power in case the temperature near the front of the drum should rise above a predetermined selected temperature during the operation of the clothes drier, for instance, in the event of reduced air flow through drum 60.

In order to measure the electrical conductivity or resistance for determining the condition of dryness of the fabrics, electrodes or probes 80, 81 are mounted within the drum 60. In the form shown, the electrodes are spirally wound about each of the drum baffles 66 to provide a maximum amount of contacting or probing surfaces exposed to the fabrics placed within the drum. As best illustrated in FIGURE 2, the electrodes are preferably set in recesses or grooves in the baffles to prevent shorting therebetween by metallic objects sometimes attached to the fabrics, for example, metal buttons, clips, buckles, and the like. It will be realized that different forms of electrodes, or probes, may be used, although the type disclosed herein is preferred.

Electrical energy is supplied to electrode 80 by lead 84 that is connected to brush 85 which engages the stationary slip ring 86 while the drum 60 is rotating. The slip ring 86 may be supported on an electrically insulative band 87 mounted on housing 17. Slip ring 86 is in turn connected to a lead 90 which runs to the control unit 92. Electrode 81 may also be supplied with electrical energy of the opposite polarity to electrode 80 by lead 83 that may be connected to a similar arrangement of brushes and slip rings. It is preferred, however, to ground electrode 81 to the rotatable drum 60, so that it is supplied by current from lead 91 which is also grounded to the framework of the drier.

The automatic control unit 92 may be secured to the upper portion of the cabinet. Leads 90, 91 enter the control unit and are connected to the control circuit to be described hereinafter.

It will be noted that the baffles 66 are formed of electrically non-conductive material in order to insulate the electrodes. However, the electrodes are electrically shorted by contacting the wet fabrics during tumbling. Ordinarly, a plurality of baffles 66 are mounted within the drum 60, each of which is provided with electrodes 80, 81, and the respective electrodes of all the baffles connected in parallel.

Referring now to FIGURE 3 which illustrates the automatic control circuitry, there is shown diagrammatically a timing cam stack 94 for controlling the drying operation. The cam stack has five cam switches 95 to 99 in which cam switch 95 controls the heater, cam switch 96 the timer motor, cam switch 97 the drive motor, cam switch 98 the sensing circuit, and cam switch 99 the damp dry setting.

It will be noted that the cam stack has "regular dry" and "damp dry" settings, either of which may be preselected through manual operation of a knob (not shown) by the operator. It should be clear that the cam stack may include other selections, for example, for wash and wear fabrics, air fluff, and special loads.

The cam stack 94 is advanced by a timer motor mechanism 102 in three minute intervals, each of which three minute interval is represented by the vertical lines in the cam stack 94 in the drawing. The shaded areas in the drawing indicate that the circuit is completed, while the blank portions mean that the circuit is open at the time interval and for the cam switch specified.

The drier is energized by a conventional three wire single phase system represented by power lines L_1, L_2 and N. The heater element 75 is connected between L_1 and L_2 for 220 volts A.C. by a circuit from L_1 through cam switch 95, line 105, thermostat switch 78, the high limit switch 79 to one side of the heater 75. The other side of the heater is connected to power line L_2 through centrifugal switch 104 in motor 34. Centrifugal switch 104 is centrifugally closed to energize heater 75.

The timer motor 102 is energized by a circuit from power line L_1, on-off switch 100, cam switch 96, line 106 to one side of the timer motor 102. The other side of the timer motor is connected to power line N for 110 volts A.C.

The drive motor is energized by a circuit from power line L_1, on-off switch 100, cam switch 97, line 107 to one side of the motor 34. The other side of the motor 34 is connected to power line N.

A motor 112 is connected on one side to line 107 and on the other side to power line N through line 114. It will be noted from inspection of the cam switch 97 that motor 112 is energized when the cam timer is manually set in either of the "regular dry" or "damp dry" positions.

Motor 112 drives a rotor switch arm 115 carrying brushes 116, 117, which are electrically connected together, such as by a jumper lead, or bus bar. The switch arm 115 is rotated as indicated by the arrow.

A circular segment 119 is engaged by brush 117. Segments 121 through 124 are sequentially and separately contacted by brush 116. As the switch arm 115 is rotated, the various circuits connected to segments 121 through 124 are electrically connected in sequence to segment 119.

A sensing circuit is energized by a circuit from power line L_1, on-off switch 100, cam switch 98, and line 108. A selenium half-wave rectifier 126 is connected on one side to line 108 and on the other side to capacitor 127 through line 128. Capacitor 127 is connected on its opposite side to segment 119.

Electrodes 80 within the drum are connected to one side of capacitor 127 through line 84, 90, and 128. Electrodes 81 are connected to segment 122 of the rotor switch through line 83, ground, and line 91. It will be noted that electrodes 81 are connected to the opposite side of capacitor 127 from electrodes 80, whenever switch arm 115 engages segment 122.

A relay 130 is connected on one side to line 128 and on the other side to segment 124. Relay 130 operates switches 131, 132. Switch 131 when closed completes a holding circuit to connect one side of relay 130 to power line N, the other side of the relay being connected to power line L_1, through rectifier 126, line 108, cam switch 98, and on-off switch 100.

Relay switch 132 controls the timer motor 102. When switch 132 is closed, the timer motor is energized by a circuit from power line L_1, on-off switch 100, cam switch

97, line 107, and switch 132 to one side of timer motor 102. The other side of the timer motor 102 is connected to power line N.

It will be noted that each pair of electrodes 80, 81 and relay 130 are both connected on one side of capacitor 127 and on the opposite sides to segments 122, 123 and 124, which are engaged by the brushes of the rotor switch in order to connect the electrodes and relay separately across the capacitor 127 as the rotor switch is revolved.

Power line N is connected to capacitor 127 for an interval by segment 121. As the rotor switch 115 is rotated, the capacitor 127 is connected in sequence to power line N through segment 121, across electrodes 80, 81 by segments 122, 123, and then across relay 130 by a segment 124.

When the rotor switch 115 contacts segment 121 the capacitor 127 is charged through a circuit from power line L_1, on-off switch 100, cam switch 98, line 108, rectifier 126 and line 128 to one side of capacitor 127. The other side of capacitor 127 is connected to power line N through segment 121, brushes 116, 117, and segment 119.

When rotor switch 115 contacts segment 122, the capacitor 127 is placed across electrodes 80, 81, so as to discharge the capacitor through an electrical circuit completed by wet fabrics contacting the electrodes 80, 81. The capacitor 127 is connected to electrodes 80 through lines 128, 90, and 84, and to electrodes 81 through segment 119, brushes 116, 117, segment 122, line 91, ground, and line 83.

When the rotor switch 115 contacts segments 123 the capacitor 127 is again placed across electrodes 80, 81, provided the cam stack 94 is in the "regular dry" position indicated by the shaded area of cam switch 99. When the cam stack 94 is advanced to the shaded area indicated on cam switch 99, segment 123 is connected to probe 81 by a circuit from line 109, line 91, ground and line 83. The line 109 is also connected to segment 122, so that the segment 123 is connected to 122 during the "regular dry" setting. It will be noted that segment 123 is not connected to segment 122 during the "damp dry" setting.

When the rotor switch 115 contacts segment 124 the relay 130 is energized, if the remaining charge on the capacitor 127 has a sufficient remaining amount after being placed across electrodes 80, 81. The relay 130 is energized through a circuit from one side of the capacitor, line 128, and line 90 to one side of the relay, and from the other side of the capacitor by a circuit to segment 119, across brushes 116, 117, and segment 124, to the other side of the relay. If relay 130 is energized as switch arm contacts segment 124, it is maintained energized by a holding circuit through switch 131, as previously described.

From the foregoing, it is believed that the operation of the device of FIGURES 1–3 is apparent. The operator opens the door 73 of the drier and inserts the fabrics in the drum 60. Next the cam timer is manually set to "regular dry" position and the on-off switch 100 closed. When the timer is set to the beginning of the "regular dry" position, the heater line 105 is connected to power line L_1 through cam switch 95. Also timer motor line 106, drive motor line 107 and sensing circuit line 108 are all connected to power line L_1, if the on-off switch 100 is closed through cam switches 96 to 98, as indicated by the shaded areas in the cam stack 94. The drive motor 34 rotates the drum 60 to tumble the clothes therein by baffles 66. After a certain rotational speed is achieved by the drive motor 34, switch 104 is centrifugally operated to close the circuit to the heater 75.

The timer drive mechanism 102 when energized advances the cam stack 94 every three minutes. It will be noted that the timer drive mechanism 102 is maintained in energized position for a total of six minutes after which it is de-energized by the cam switch 96, as indicated by the blank area in the third three minute interval. When the timer drive mechanism is de-energized, continued operation of the drier is under control of the sensing circuit. It will be noted that during this third time interval, cam switch 99 connects segment 123 to segment 122 through line 109, so that electrodes 80, 81 are connected across capacitor 127 for the sum of the time periods during which brush 116 contacts both segment 122 and segment 123. The timer drive mechanism remains de-energized and the drier continues to operate until the timer drive mechanism is again energized to terminate the drying operation through actuation of the sensing circuit. With the timer drive mechanism de-energized, the drier operation continues with the heater energized and the drive motor rotating to tumble the fabrics within the drum 60.

As long as the fabrics within the drum remain wet, or sufficiently damp, to effectively discharge the capacitor 127, the drying operation continues. Although the capacitor is charged through the rectifier when the rotor switch contacts segment 121, it is discharged when the rotor switch contacts both segments 122 and 123 by fabrics shorting the electrodes 80, 81, so there is not sufficient charge remaining on the capacitor 127 to energize relay 130 when the rotor switch contacts segment 124. However, when the moisture is removed from the clothes, the fabrics attain an increased electrical resistance and the charge on the capacitor is retained. When the charge remaining on the capacitor after the rotor switch 115 has contacted segments 122 and 123 is of a predetermined amount sufficient to energize relay 130, the relay will be operated as the rotor switch contacts segment 124. Once energized, the relay remains closed through a circuit completed by a holding switch 131.

One of the advantages of the invention is due to the fact that the sensing circuit is not instantaneously responsive to a momentary condition of the fabrics. This is accomplished by placing the capacitor 127 across the electrodes 80, 81. The discharge of capacitor 127 occurs for a time determined by the period in which brush 116 contacts segments 122 and 123. At the same time fabrics are being tumbled in the drum so that random pieces contact electrodes 80, 81. If during this time period any wet fabrics short electrodes 80, 81, the capacitor 127 will be discharged to a value below that needed to energize relay 130 with the result that the drying operation is not terminated. If, however, during this time period all the fabrics which contact electrodes 80, 81, are dry, the capacitor will retain a charge value sufficient to energize relay 130. When relay 130 is energized, it remains closed as previously described, and completes a circuit through switch 132 to again energize the timer drive mechanism 102. The timer drive mechanism then begins to run through the remainder of the open interval in the timer cam switch 96 and for two additional three minute periods making a total of approximately six minutes. It should be noted that at the end of the first additional three minute interval the heater circuit is de-energized and at the end of the second three minute interval all remaining circuits are de-energized by the timer cam stack 94 and the drying operation discontinued.

The additional three minute heating period insures that the clothes will be completely dry, even in the folds or thick portions which are often found in fabrics of the home laundry. The last three minute period of operation without heat obtains a cooling period to bring the temperature of the clothes down to a comfortable handling temperature.

In the event the operator desires the clothes to be damp dry, a condition suitable for ironing, the timer cam stack 94 is manually positioned to "damp dry." In this position, operation of the device is similar to "regular dry" with two exceptions.

The cam switch 99 disconnects segment 123 from segment 122 and the circuit to electrode 81, so that the

discharge of capacitor 127 through the fabrics touching electrodes 80, 81 does not occur when brush 116 is contacting segment 123. As a result, the discharge of the capacitor 127 through electrodes 80, 81 only takes place when brush 116 is contacting segment 122. The net effect is shortening of the time for the discharge of the capacitor through the fabrics, because of the disconnection of segment 123 from the discharge circuit. Thus, in the "damp dry" position the capacitor 127 is not allowed as long a discharge time through the fabrics as in the "regular dry" position, so that the remaining charge on the capacitor after the rotor switch has traversed segments 122, 123 will be greater than if the discharge time included segment 123. Consequently, the relay 130 will be energized by the charge on capacitor 127 after a shorter drying period than in the "regular dry" setting and with the fabrics still partially damp.

As in the instance of the "regular dry" position and the "damp dry position" the relay 130 also completes a circuit through switch 132 to energize the timer drive mechanism 102. The timer drive mechanism then begins to run through the open interval in the timer cam switch 96, at which time all the circuits are de-energized. In this way, the fabrics in the damp dry position are subjected to less heat before the drive motor is stopped so that they contain the desired amount of moisture.

Referring now to FIGURE 4 there is illustrated a modified form of sensing circuit. The automatic circuitry is the same as depicted in FIGURE 3, except that the rotary switch connects the capacitor 127 and electrodes 80, 81 to the power source during the same time period. In this way, the capacitor is charged and discharged during the same time period.

Motor 112 drives a rotor switch arm 115′ carrying brushes 116′, 117′, which are electrically connected together, such as by a jumper lead, or a bus bar. Switch arm 115′ is rotated as indicated by the arrow.

Circular segment 119′ is engaged by brush 117′. Segments 122′, 123′ and 124′ are sequentially and separately contacted by brush 116′. As the switch arm 115′ is rotated, segments 122′, 123′ and 124′ are electrically connected in sequence to segment 119′.

It will be noted that one side of the pair of electrodes 80, 81, is connected to one side of capacitor 127 through line 90. The opposite side of the electrodes is connected to the other side of capacitor 127 when the brushes electrically connect segment 119′ to segment 122′. The electrodes are connected to segment 122′ through line 83 ground, and line 91. Power line N also is connected to segment 122′. The other side of capacitor 127 is connected to line L_1 by a circuit through switch 100, cam switch 98, line 108, rectifier 126, and line 128. When segment 122′ is engaged by the brushes of the rotor switch the electrodes and power source are connected together across the capacitor 127 for a period of time determined by the length of segment 122′ as the rotor switch is revolved.

It will be noted that segment 123′ is connected to segment 122′ through cam switch 99 and line 109. This increases the time interval of segment 122′ for a period represented by segment 123′ when cam stack 94 is at the "regular dry" setting.

It will be noted that segment 124′ connects capacitor 127 across relay 130 when the brushes electrically connect segment 119′ to segment 124′.

As the rotor switch 115′ is rotated, the capacitor 127 is connected for a first time interval determined by segment 122′ to power line N and across electrodes 80, 81, and then for a second time interval determined by segment 124′ across relay 130. In the "regular dry" setting the first time period is increased in length by segment 123′.

When the rotor switch 115′ contacts segment 122′ the capacitor 127 is charged through a circuit from power line L_1, on-off switch 100, cam switch 98, line 108, rectifier 126 and line 128 to one side of capacitor 127. The other side of capacitor 127 is connected to power line N through segment 119′, brushes 116′, 117′, and segment 122′.

Also, when rotor switch 115′ contacts segment 122′, the capacitor 127 is placed across electrodes 80, 81 so as to discharge the capacitor through an electrical circuit completed by wet fabrics contacting the electrodes 80, 81. The capacitor 127 is connected to electrodes 80 through lines 128, 90, and 84. The other side of capacitor 127 is connected to electrodes 81 through segment 119′, brushes 116′, 117′, segment 122′, line 91, ground, and line 83.

When the rotor switch 115′ contacts segment 123′ the capacitor 127 is again placed across electrodes 80, 81, and power line N provided the cam stack 94 is in the "regular dry" position indicated by the shaded area of cam switch 99.

When the rotor switch 115′ contacts segment 124′ the relay 130 is energized, if the remaining charge on the capacitor 127 has a sufficient remaining amount after being placed across electrodes 80, 81. The relay 130 is energized through a circuit from one side of the capacitor, line 128, and line 90 to one side of the relay, and from the other side of the capacitor by a circuit to segment 119′, across brushes 116′, 117′, and segment 124′, to the other side of the relay. If relay 130 is energized as switch arm contacts segment 124′, it is maintained energized by a holding circuit through switch 131, as previously described.

From the foregoing, it is believed that the operation of the device of FIGURE 4 is apparent. After the operator opens the door 73 of the drier and inserts the fabrics in the drum 60, the cam timer is manually set to "regular dry" position and the on-off switch 100 closed. When the timer is set to the beginning of the "regular dry" position, the heater line 105 is connected to power line L_1 through cam switch 95. Also timer motor line 106, drive motor line 107 and sensing circuit line 108 are all connected to power line L_1, if the on-off switch 100 is closed through cam switches 96 to 98, as indicated by the shaded areas in the cam stack 94. The drive motor 34 rotates the drum 60 to tumble the clothes therein by baffles 66. After a certain rotational speed is achieved by the drive motor 34, switch 104 is centrifugally operated to close the circuit to the heater 75.

The timer drive mechanism 102 when energized advances the cam stack 94 every three minutes. The timer drive mechanism 102 is maintained in energized position for a total of six minutes after which it is de-energized by the cam switch 96, as indicated by the blank area in the third three minute interval. When the timer drive mechanism is de-energized, continued operation of the drier is under control of the sensing circuit. During this third time interval, cam switch 99 connects segment 123′ to segment 122′ through line 109, so that electrodes 80, 81 are connected across capacitor 127 for the sum of the time periods during which brush 116′ contacts both segment 122′ and segment 123′. The timer drive mechanism remains de-energized and the drier continues to operate until the timer drive mechanism is again energized to terminate the drying operation through actuation of the sensing circuit. With the timer drive mechanism de-energized, the drier operation continues with the heater energized and the drive motor rotating to tumble the fabrics within the drum 60.

As long as the fabrics within the drum remain wet, or sufficiently damp, to effectively discharge the capacitor 127, the drying operation continues. Although the capacitor is charged through the rectifier when the rotor switch contacts segments 122′ and 123′, it is discharged at the same time by fabrics shorting the electrodes 80, 81, so there is not sufficient charge remaining on the capacitor 127 to energize relay 130 when the rotor switch contacts segment 124′. However, when the moisture is removed from the clothes, the fabrics attain an increased electri-

cal resistance and the charge on the capacitor is retained. When the charge remaining on the capacitor after the rotor switch **115** has contacted segments **122'** and **123'** is of a predetermined amount sufficient to energize relay **130**, the relay will be operated as the rotor switch contacts segment **124'**. Once energized, the relay remains closed through a circuit completed by a holding switch **131**.

The sensing circuit of FIGURE 4 is not instantaneously responsive to a momentary condition of the fabrics. This is accomplished by placing the capacitor **127** across the electrodes **80, 81** for a predetermined time period determined by segments **122'** and **123'**. The charge and discharge of capacitor **127** occurs throughout the time period in which brush **116** contacts segments **122'** and **123'**. At the same time fabrics are being tumbled in the drum so that random pieces contact electrodes **80, 81**. The time period determined by the segments **122'** and **123'** is sufficient for a change of at least a portion of the fabrics contacting the electrodes. If during this time period any wet fabrics short electrodes **80, 81**, the capacitor **127** will be discharged to a value below that needed to energize relay **130** with the result that the drying operation is not terminated. If during this time period, however, all the fabrics that contact electrodes **80, 81** are dry, the capacitor will retain a charge value sufficient to energize relay **130**. When relay **130** is energized, it remains closed as previously described, and completes a circuit through switch **132** to again energize the timer drive mechanism **102**. The timer drive mechanism then begins to run through the remainder of the open interval in the timer cam switch **96** and for two additional three minute periods making a total of approximately six minutes as previously described.

In the event the operator desires the clothes to be damp dry, a condition suitable for ironing, the timer cam stack **94** is manually positioned to "damp dry." In this position, operation of the device is similar to "regular dry," except cam switch **99** disconnects segment **123'** from segment **122'** and the circuit to electrode **81** and power line N. This shortens the time period during which capacitor **127** is charged and discharged. Also, the timer cam switch **96** shortens the cool off period. In this way, the fabrics in "damp dry" setting are subjected to less heat before complete shut-off, so they contain the desired moisture content.

Referring now to the modified form of the invention shown in FIGURE 5, there is illustrated a further simplification of the control circuitry. The drier is energized by a conventional three wire single phase system represented by power lines L_1, L_2, and N. The heater element **75** is connected between L_1 and L_2 supplying 220 volts A.C. by a circuit from L_1, line **202**, switch **211**, line **208**, line **205**, line **206**, thermostat switch **78**, high limit switch **79** to one side of the heater **75**. The other side of the heater is connected to power line L_2 through centrifugal switch **104** in motor **34**. Centrifugal switch **104** is centrifugally closed only when motor **34** is rotating.

The heater is controlled by relay **210**. Relay **210**, normally de-energized, may be momentarily energized by depressing start switch **200** through a circuit from L_1, line **205**, and switch **231** to one side of the relay **210**. The other side of the relay **210** is connected to line N. After the relay **210** is momentarily energized it is maintained energized by holding circuit from L_1, line **202**, line **207**, switch **211**, line **208**, switch **231**, to one side of relay **210**. The other side of relay **210** is connected to line N.

The drive motor **34** is energized by a circuit from power line L_1, line **202**, switch **212**, line **209**, to one side of the drive motor. The other side of the drive motor is connected to power line N.

Thermostatic switch **214** is connected in parallel to switch **212**. Switch **214** is open below and closed above about 120° F. to maintain the drive motor **34** energized until the fabrics cool off, after switch **212** is opened.

A rotary switch **220** is connected to the drive mechanism of drum **60** by a transmission (not shown). The rotary switch **220** may rotate at the same rotary speed as drum **60**, or at other velocities. The transmission (not shown) drives a rotary switch arm **215** carrying brushes **216, 217**. Brushes **216** and **217** are electrically connected together, such as by a jumper element, or bus bar. The switch arm **215** is rotated as indicated by the arrow.

A circular segment **219** is engaged by a brush **217**. Segments **222** and **224** are sequentially and separately connected by a brush **216**. As the switch arm **215** is rotated by the transmission (not shown), the segments **222** and **224** are electrically connected in sequence to segment **219**.

A sensing circuit is energized by a circuit from power line L_1, line **202**, line **207**, relay switch **211**, line **208**, and line **205** to selenium half-wave rectifier **226**. The half-wave rectifier supplies direct current to charging capacitor **227** through charging resistor **240**. The other side of capacitor **227** is connected to line N through segment **219**, brushes **216, 217**, segment **222**, and charging resistor **241**.

Electrodes **80** within the drum are connected to one side of capacitor **227** through lines **284, 290**. Electrodes **81** are connected to segment **219** of the rotor switch through line **283**, ground, and line **291**. It will be noted that the electrodes **81** are connected to the opposite side of capacitor **227** from electrodes **80**, so that a short across the electrodes will discharge capacitor **227**.

A relay **230** is connected on the one side of capacitor **227** by line **290**. Relay **230** is connected on the other side to segment **224** of rotary switch **220**. Relay **230** when energized, opens the normally closed switch **231**. Switch **231** is in series with the holding circuit of relay **210** from power line L_1, line **202**, line **207**, switch **211**, line **208**, switch **231**; and line N being connected to the relay **210**.

It will be noted that one side of the D.C. power supply from the selenium rectifier **226** and one side of each pair of electrodes **80, 81** are connected to one side of capacitor **227**. The D.C. power supply is connected to the opposite side of capacitor **227** from line N, charging resistor **241**, segment **222**, brushes **216, 217**, and segment **219**. Each pair of electrodes **80, 81** is connected on the opposite side of capacitor **227** by a line **283**, ground, and line **291**. Capacitor **227**, therefore, is charged by the D.C. power supply through charging resistors **240, 241** and at the same time discharged through fabrics contacting electrodes **80, 81** throughout the time period during which brush **216** contacts segment **222** of rotary switch **220**.

It will be noted that the relay **230** is connected on one side of capacitor **227**. The relay is connected to the opposite side of capacitor **227** when brush **216** contacts segment **224** by a circuit from brush **217** and segment **219**.

As the rotor switch **215** is rotated, brush **216** contacts segment **222** for a first time period determined by the length of the segment. During this first time period, the capacitor is charged from the D.C. power supply through the charging resistors **240, 241** according to well known resistor-capacitor charging principles. During the same time period, the capacitor is discharged by wet fabrics shorting electrodes **80, 81**.

As the rotor switch continues to rotate, it contacts segment **224** for a short interval to connect capacitor **227** across relay **230**. If sufficient charge remains on the capacitor **227**, the relay **230** is energized to open the holding circuit to relay **210** by opening switch **231**. If insufficient charge remains on the capacitor **227**, the relay is inoperative.

The total value of the charging resistance in series with capacitor 227 may be reduced by closing switch 243. By closing switch 243, resistor 244 is connected in parallel to resistor 240.

From the foregoing it is believed that the operation device shown in FIGURE 5 is apparent. The operator inserts fabrics in the drum of the drier 60. If the operator wishes to have the fabrics "damp-dry," such as for ironing, at the end of the drying operation, switch 243 is depressed. If the operator wishes to have the fabrics "regular dry" the switch 243 is kept opened. The start switch 200 is depressed against the bias of spring 201 to momentarily energize relay 210 by circuit from L_1, switch 200, line 205, and switch 231, to one side of relay 210. The opposite side of relay 210 is connected to line N. When relay 210 is momentarily energized, switches 211, 212 are closed. Switch 211 completes a holding circuit to maintain the relay 210 energized. Switch 212 completes a circuit to energize the drive motor 34. The holding circuit for relay 210 is from line L_1, line 202, line 207, holding switch 211, line 208, switch 231 to one side of relay 210. The opposite side of relay 210 is connected to line N. The circuit for energizing drive motor 34 is from line L_1 to line 202, switch 212 line 209 to one side of the drive motor. The opposite side of the drive motor is connected to line N.

The drive motor begins to rotate the drum to tumble the fabrics therein by baffle 66. After a certain rotational speed is achieved, switch 104 in the drive motor is centrifugally operated to close the circuit to heater 75. The heater is energized by a 220 volt circuit from line L_1, line 202, line 207, switch 211, line 208, line 205, line 206, thermostat switch 78, high limit switch 79 to one side of heater 75. The opposite side of heater 75 is connected to line L_2 through centrifugal switch 104. The drying operation in which heater is energized continues as long as the relay 210 is maintained energized.

It will be noted that the heater is under control of switch 211, and the drive motor under the control of switch 212 of relay 210. A cool-off thermostatic switch is connected in parallel to switch 212. Thermostatic switch is opened below and closed above about 120° F. in order to keep the drum rotating during termination of the drying operation until the fabrics have cooled.

While the drum is rotating, the rotary switch 220 is revolving through a transmission (not shown). When the brush 216 contacts segment 222 of the rotor switch the capacitor 227 is gradually charged through resistors 240, 241 according to well known principles. At the same time the capacitor 227 is discharged by wet fabrics contacting electrodes 80, 81.

As long as the fabrics in the drum remain wet or sufficiently damp, to effectively discharge capacitor 227, the drying operation continues. Although the capacitor is gradually charged through the rectifier 226 over a time period determined by the total resistance in series therewith, it is discharged by fabrics shorting the electrodes, so that there is no sufficient charge on the capacitor to energize relay 230 when the rotor contacts segment 224. When the moisture is removed from the clothes, however, the fabrics attain an increased electrical resistance and the charge on the capacitor gradually increases. When the charge remaining on the capacitor after the rotor switch 215 contacts segment 224 is of a predetermined amount sufficient to energize relay 230, the relay will be operated. Once energized, relay 230 opens switch 231 to de-energize relay 210. When the relay 210 is de-energized, the circuit to heater 75 is opened to shut off the heat. Although switch 212 is also opened when relay 210 is de-energized, the circuit to the drive motor is maintained through a shunt circuit containing thermostat switch 214 for a cool off period.

During the cool off period, the circuit to the drive motor 34 is maintained through the cool off thermostat 214 from line L_1, line 202, cool off thermostat 214, line 209 to one side of drive motor 34. The opposite side of the drive motor 34 is connected to line N.

When the temperature in the drum drops to 120°, or below, the cool off thermostat opens to shut off the drive motor. This terminates the drying operation.

The total value of the resistance in series with capacitor 227 is designed to charge the capacitor at a rate less than the rate of discharge through the fabrics contacting electrodes 80, 81 when the fabrics are wet, but sufficient to charge the capacitor 227 at a rate greater than the discharge through the fabrics when dry. It has been found that if the power between L_1 and N is 60 cycle alternating current, the capacitor 227 may be a 6 microfarad paper condenser and the total resistance of 240, and 241 is 31 megohms, or 30 and 1 megohms, respectively. Relay 230 may be responsive to voltages above 60–70 volts.

In the event the operator desires the clothes to be "damp-dry," a condition suitable for ironing, the switch 243 is closed. In this position, the operation of the device is similar to "regular dry," except the resistor 244 is connected in parallel to resistor 240 reducing the total resistance in series with capacitor 227. This causes capacitor 227 to charge more rapidly, so that the fabrics are partially damp when relay 230 is energized.

Referring now to the modified form of the invention shown in FIGURE 6, there is illustrated a further simplification of the control circuitry. The drier is energized by a conventional three wire single phase system represented by power lines L_1, L_2, and N. The heater element 75 is connected between L_1 and L_2 supplying 220 volts A.C. by a circuit from L_1, line 302, switch 311, line 308, line 305, line 306, thermostat switch 78, high limit switch 79 to one side of the heater 75. The other side of the heater is connected to power line L_2 through centrifugal switch 104 in motor 34. Centrifugal switch 104 is centrifugally closed only when motor 34 is rotating.

The heater is controlled by relay 310. Relay 310, normally de-energized, may be momentarily energized by depressing start switch 300 through a circuit from L_1, line 307, and switch 331 to one side of the relay 310. The other side of the relay 310 is connected to line N. After the relay 310 is momentarily energized, it is maintained energized by a holding circuit from L_1, line 302, switch 311, line 308, line 307, switch 331, to one side of relay 310. The other side of relay 310 is connected to line N.

The drive motor 34 is energized by a circuit from power line L_1, line 302, switch 312, line 309, to one side of the drive motor. The other side of the drive motor is connected to power line N.

Thermostatic switch 314 is connected in parallel to switch 312. Switch 314 is open below and closed above about 120° F. to maintain the drive motor 34 energized until the fabrics cool off, after switch 312 is opened.

A rotary cam switch 320 is connected to the drive mechanism of drum 60 by a transmission (not shown). The rotary cam switch 320 may rotate a cam 321 at the same rotary speed as drum 60, or at other velocities. The cam operates a cam follower 316 to which is connected switch contact 317. Cam 321 normally holds contact 317 against contact 319, except during the dwell 324 at which contact 317 is connected to contact 318.

A sensing circuit is energized by a circuit from power line L_1, line 302, relay switch 311, line 308, line 305 and line 304 to selenium half-wave rectifier 326. The half-wave rectifier supplies direct current to charging capacitor 327 through charging resistor 340 and switch contacts 319, 317. The other side of capacitor 327 is connected to line N through charging resistor 341.

Electrodes 80 within the drum are connected to one side of capacitor 327 through line 384 and contacts 319, 317. Electrodes 81 are connected to the other side of

capacitor 327 through line 383, ground, and line 391. It will be noted that the electrodes 81 are connected to the opposite side of capacitor 327 from electrodes 80, so that a short across the electrodes will discharge capacitor 327.

A relay 330 is connected on the one side of capacitor 327 by line 390. Relay 330 is connected on the other side to switch contact 318 of rotary switch 320. Relay 330 when energized, opens the normally closed switch 331. Switch 331 is in series with the holding circuit of relay 310, from L_1, line 302, switch 331, line 308, and switch 311; the other side of the relay 310 is connected to line N.

It will be noted that one side of the D.C. power supply from the selenium rectifier 326 and one side of each pair of electrodes 80, 81 are connected to one side of capacitor 327 through switch contacts 319, 317. The D.C. power supply is connected to the opposite side of capacitor 327 from line N through charging resistor 341. Each pair of electrodes 80, 81 is connected on the opposite side of capacitor 327 by a line 383, ground, and line 391. Capacitor 327, therefore, is charged by the D.C. power supply through charging resistors 340, 341 and at the same time discharged through fabrics contacting electrodes 80, 81 throughout the time period during which cam follower 316 maintains contact 317 connected to contact 319.

It will be noted that the relay 330 is connected on one side of capacitor 327. The relay is connected to the opposite side of capacitor 327 when contact 317 is connected to contact 318.

As the cam 321 is rotated, contact 317 is connected to contact 319 for a first time period determined by the length of the cam profile. During this first time period, the capacitor is charged from the D.C. power supply through the charging resistors 340, 341 according to well known resistor-capacitor charging principles. During the same time period, the capacitor is discharged by wet fabrics shorting electrodes 80, 81.

As the cam 320 continues to rotate, the dwell 324 causes contact 317 to touch contact 318 for a short interval to connect capacitor 327 across relay 330. If sufficient charge remains on the capacitor 327, the relay 330 is energized to open the holding circuit to relay 310 by opening switch 331. If insufficient charge remains on the capacitor 327, the relay is inoperative.

The total value of the charging resistance in series with capacitor 327 may be reduced by closing switch 343. By closing switch 343, resistor 344 is connected in parallel to resistor 340.

From the foregoing it is believed that the operation of device shown in FIGURE 6 is apparent. The operator inserts fabrics in the drum of the drier 60. If the operator wishes to have the fabrics "damp-dry," such as for ironing, at the end of the drying operation switch 343 is depressed. If the operator wishes to have the fabrics "regular dry" the switch 343 is kept opened. The start switch 300 is depressed against the bias of spring 301 to momentarily energize relay 310 by circuit from L_1, switch 300, line 307, and switch 331, to one side of relay 310. The opposite side of relay 310 is connected to line N. When relay 310 is momentarily energized, switches 311, 312 are closed. Switch 311 completes a holding circuit to maintain the relay 310 energized. Switch 312 completes a circuit to energize the drive motor 34. The holding circuit for relay 310 is from line L_1, line 302, holding switch 311, line 308, line 307, switch 331 to one side of relay 310. The opposite side of relay 310 is connected to line N. The circuit for energizing drive motor 34 is from line L_1 to line 302, switch 312, line 309 to one side of the drive motor. The opposite side of the drive motor is connected to line N.

The drive motor begins to rotate the drum to tumble the fabrics therein by baffle 66. After a certain rotational speed is achieved, switch 104 in the drive motor is centrifugally operated to close the circuit to heater 75. The heater is energized by a 220 volt circuit from line L_1, line 302, switch 311, line 308, line 305, line 306, thermostat switch 78, high limit switch 79 to one side of heater 75. The opposite side of heater 75 is connected to line L_2 through centrifugal switch 104. The drying operation in which heater is energized continues as long as the relay 310 is maintained energized.

It will be noted that the heater is under control of switch 311, and the drive motor under the control of switch 312 of relay 310. A cool-off thermostatic switch is connected in parallel to switch 312. Thermostatic switch is open below and closed above about 120° F. in order to keep the drum rotating during termination of the drying operation until the fabrics have cooled.

While the drum is rotating, the rotary cam switch 320 is revolving through a transmission (not shown). When the switch contacts 319, 317 are connected, the capacitor 327 is gradually charged through resistors 340, 341 according to well known principles. As the same time the capacitor 327 is discharged by wet fabrics contacting electrodes 80, 81.

As long as the fabrics in the drum remain wet or sufficiently damp, to effectively discharge capacitor 327, the drying operation continues. Although the capacitor is gradually charged through the rectifier 326 over a time period determined by the total resistance in series therewith, it is discharged by fabrics shorting the electrodes, so that there is no sufficient charge on the capacitor to energize relay 330 when the cam 321 causes contact 317 to touch contact 318. When the moisture is removed from the clothes, however, the fabrics attain an increased electrical resistance and the charge on the capacitor gradually increases. When the charge remaining on the capacitor after the contact 317 connects contact 318 is of a predetermined amount sufficient to energize relay 330, the relay will be operated. Once energized, relay 330 opens switch 331 to de-energize relay 310. When the relay 310 is de-energized, the circuit to heater 75 is opened to shut off the heat. Although switch 312 is also opened when relay 310 is de-energized, the circuit to the drive motor is maintained through a shunt circuit containing thermostat switch 314 for a cool off period.

During the cool off period, the circuit to the drive motor 34 is maintained through the cool off thermostat 314 from line L_1, line 302, cool off thermostat 314, line 309 to one side of drive motor 34. The opposite side of the drive motor 34 is connected to line N.

When the temperature in the drum drops to 120°, or below, the cool off thermostat opens to shut off the drive motor. This terminates the drying operation.

The total value of the resistance in series with capacitor 327 is designed to charge the capacitor at a rate less than the rate of discharge through the fabrics contacting electrodes 80, 81 when the fabrics are wet, but sufficient to charge the capacitor 327 at a rate greater than the discharge through the fabrics when dry. It has been found that if the power between L_1 and N is 60 cycle alternating current, the capacitor 327 may be a 6 microfarad paper condenser and the total resistance of 340, and 341, is 31 megohms, or 30 and 1 megohms, respectively. Relay 330 may be responsive to voltages above 60—70 volts.

In the event the operator desires the clothes to be "damp-dry," a condition suitable for ironing, the switch 343 is closed. In this position, the operation of the device is similar to "regular-dry," except the resistor 344 is connected in parallel to resistor 340 reducing the total resistance in series with capacitor 327. This causes capacitor 327 to charge more rapidly, so that the fabrics are partially damp when relay 330 is energized.

In the drawings and specification there has been set forth a preferred embodiment of the invention, and although specific terms are employed, these are used in a generic and descriptive sense only, and not for purposes of

limitation. Changes in form and the proportion of parts, as well as the substitution of equivalents are contemplated, as circumstances may render expedient, without departing from the spirit or scope of this invention as further defined in the following claims.

I claim:

1. In a control system, the combination comprising, a chamber, electrodes positioned for contacting and completing an electrical circuit through the articles to be tested, means associated with said chamber for causing relative movements and random contacts between the articles and said electrodes, capacitor means, means for gradually charging said capacitor means through charging resistance means, means for discharging said capacitor means through the articles contacting said electrodes, control means responsive to a predetermined charge on said capacitor means, and means for connecting said capacitor means to said electrodes and then to said control means.

2. In a drying machine, a chamber for containing a plurality of pieces of fabrics, heating means for drying the fabrics in said chamber, a capacitor, electrodes positioned within said chamber for contacting and completing an electrical circuit through the fabrics, means for rotating said chamber for tumbling the fabrics, means for charging said capacitor, means for intermittently connecting said capacitor to said means for charging said capacitor and after being charged, across said electrodes for a timed period of sufficient length for random pieces of fabric while tumbled to contact said electrodes, and means responsive to a predetermined charge maintained on said capacitor after said timed period for controlling termination of the drying operation.

3. In a drying machine, a chamber for containing a plurality of pieces of fabrics, heating means for drying the fabrics in said chamber, a capacitor, electrodes positioned within said chamber for contacting and completing an electrical circuit through the fabrics, means for rotating said chamber for tumbling the fabrics, means for charging said capacitor, means for connecting said capacitor to said means for charging said capacitor, and after being charged, across said electrodes for a timed period of sufficient length to permit discharge of said capacitor through random pieces of fabrics while tumbled, and means responsive to a predetermined charge maintained on said capacitor after said timed period for initiating termination of the drying operation.

4. In a clothes drying machine, a chamber for containing a plurality of pieces of fabrics to be dried, heating means for drying the fabrics in said chamber, a capacitor, means for charging said capacitor, electrodes mounted stationary relative to, and in association with, said chamber for contacting and completing an electrical circuit through said fabrics, means responsive to a predetermined charge on said capacitor for initiating the termination of the drying operation, means for moving said pieces of fabrics in random contact with said electrodes, and means for sequentially connecting said capacitor to said means for charging said capacitor, to said electrodes for contacting and completing an electric circuit through pieces of fabrics while moved in random contact with said electrodes for a predetermined time whereby the amount of discharge of said capacitor is determined by the dryness of said fabrics, and to said means responsive to a predetermined charge for initiating the termination of the drying operation when said predetermined charge remains on said capacitor after connection to said electrodes.

5. In a drying machine, a chamber for containing a plurality of pieces of fabrics, heating means for drying the fabrics in said chamber, a capacitor, means for charging said capacitor, electrodes positioned within said chamber for contacting and completing an electrical circuit through the fabrics, means for rotating said chamber for tumbling random pieces of fabrics in contact with said electrodes, control means responsive to a predetermined capacitor charge for controlling the termination of the drying operation, and switch means for cyclically connecting said capacitor to said charging means, and then to said electrodes during a predetermined time period for random pieces of fabrics while tumbled to contact said electrodes, and then to said control means.

6. In a drying machine, a chamber for containing a plurality of pieces of fabrics, heating means for drying said fabrics in said chamber, a capacitor, charging means for electrically charging said capacitor, electrodes positioned within said chamber for contacting and completing an electrical circuit through the fabrics, means for rotating said chamber for moving said pieces of fabrics in random contact with said electrodes, control means responsive to a predetermined charge on said capacitor for controlling termination of the drying operation, and switch means for sequentially connecting said capacitor to said charging means for building a charge on said capacitor, across said electrodes for a period of predetermined time of sufficient length for random pieces of fabrics to contact said electrodes to discharge said capacitor below said predetermined charge by the electrical circuit through the pieces of fabrics when the fabrics are below a predetermined degree of dryness, and then to said control means for controlling termination of the drying operation when the capacitor retains said predetermined charge.

7. In a drying machine, a chamber for containing a plurality of pieces of fabrics, heating means for drying said fabrics in said chamber, a capacitor, charging means for electrically charging said capacitor, electrodes mounted stationary relative to, and in association with, said chamber for contacting and completing an electrical circuit through the fabrics, means in association with said chamber for moving said pieces of fabrics in random contact with said electrodes, control means responsive to a predetermined charge on said capacitor for controlling termination of the drying operation, and means for sequentially connecting said capacitor to said charging means and after being charged, across said electrodes for a predetermined period of time of sufficient length for random pieces of fabrics to contact said electrodes to discharge said capacitor below said predetermined charge by the electrical circuit through the pieces of fabrics when the fabrics are below a predetermined degree of dryness, and then to said control means for controlling termination of the drying operation when the capacitor retains said predetermined charge.

8. In a drying machine, a chamber for containing pieces of fabrics to be dried, heating means for drying said fabrics in said chamber, a capacitor, means for charging said capacitor, electrodes mounted stationary relative to, and in association with, said chamber for contacting and completing an electrical circuit through said fabrics, means for moving said pieces of fabrics in random contact with said electrodes, means responsive to a predetermined charge on said capacitor for initiating the termination of the drying operation, means for sequentially connecting said capacitor to said means for charging said capacitor, to said electrodes for contacting and completing an electric circuit through said fabrics for a predetermined length of time of a period sufficient for random pieces of fabrics to contact said electrodes while moved, and to said means responsive to a predetermined charge for initiating the termination of the drying operation when said predetermined charge remains on said capacitor after connection to said electrodes, and means for manually varying the period of time said capacitor is connected to said electrodes for contacting and completing an electric circuit through the fabrics.

9. A fabric dryer comprising: a chamber for receiving fabrics to be dried; heating means arranged to heat fabrics in said chamber; cyclically moving means for tumbling fabrics within said chamber; said chamber having spaced conductors positioned so as to be bridged by tumbling fabrics whereby said conductors are provided

with a low resistance electrical bridge when the fabrics are wet and the electrical resistance between said conductors increases as the fabrics become dry; a time delay circuit including in series a rectifier, a switch, and a capacitor, means for connecting said conductors across said capacitor for discharging said capacitor when wet fabrics are being tumbled in said chamber, means being arranged to provide cyclic opening and closing of said switch for charging said capacitor; electric means for controlling operation of said heating means; and means responsive to a predetermined charge across said capacitor for controlling said electric means.

10. A fabric dryer comprising: a chamber for receiving fabrics to be dried; heating means arranged to heat fabrics in said chamber; cyclically moving means for tumbling fabrics within said chamber; said chamber having spaced conductors positioned so as to be bridged by tumbling fabrics whereby said conductors are provided with a low-resistance electrical bridge when the fabrics are wet and the electrical resistance between said conductors increases as the fabrics become dry; a time delay circuit including in series a rectifier, a switch, and a capacitor, means for connecting said conductors across said capacitor for discharging said capacitor when wet fabrics are being tumbled in said chamber, means being arranged to provide cycle closing of said switch for charging said capacitor; electric means for controlling operation of said heating means; and means responsive to a predetermined charge across said capacitor for controlling said electric means.

11. In a fabric treating machine having at least one operation, the combination comprising: a chamber for receiving fabric to be treated; cyclically moving means including an electric motor for tumbling fabrics within said chamber; a time delay circuit for providing a minimum predetermined period of tumbling of said fabrics including in series a rectifier, a switch, and a capacitor; means for cyclic closing of said switch; means including conductors within said chamber for contacting and completing an electrical circuit through the fabrics within said chamber; and means responsive to a predetermined charge across said capacitor for controlling at least a portion of one operation of said fabric treating machine.

12. In a control system for use in a machine for treating articles, the combination comprising, a chamber, means for treating articles within said chamber, control means for controlling at least one operation, capacitor means, means including conductor means within said chamber for contacting and completing an electrical circuit through the articles for discharging said capacitor means, means for causing relative movements and random contacts between a plurality of articles and said conductor means, means for cyclically supplying an electrical charge to said capacitor means, means responsive to an electrical charge of predetermined value on said capacitor means for regulating said control means, and means for connecting said last described means to said capacitor means.

13. In a control system for use in a machine for treating articles, the combination comprising, a chamber, means for treating articles within said chamber, control means for controlling at least one operation, capacitor means, means including conductor means within said chamber for contacting and completing an electrical circuit through the articles for discharging said capacitor means, means for causing relative movements and random contacts between a plurality of articles and said conductor means, means for supplying an electrical charge to said capacitor means, means responsive to an electrical charge of predetermined value on said capacitor means for regulating said control means, and means for cyclically connecting said last described means to said capacitor means.

14. In a control system for use in a machine for treating articles, the combination comprising, a chamber, means for treating articles within said chamber, control means for controlling at least one operation, capacitor means, means including conductor means within said chamber for contacting and completing an electrical circuit through the articles for discharging said capacitor means, means for causing relative movements and random contacts between a plurality of articles and said conductor means, means responsive to an electrical charge of predetermined value on said capacitor means for regulating said control means, charging means for supplying an electrical charge to said capacitor means, means for periodically connecting said capacitor means to said charging means and to said means responsive to an electric charge of predetermined value on said capacitor means.

15. In a control system for use in a machine for treating articles, the combination comprising, control means for controlling at least one operation, capacitor means, means including conductor means within said chamber for contacting and completing an electrical circuit through the articles for discharging said capacitor means, means for causing relative movements and random contacts between a plurality of articles and said conductor means, means for supplying an electrical charge to said capacitor means, an electrical element having a conductive condition and non-conductive condition, said electrical element responsive to an electrical charge of predetermined value on said capacitor means to change from one condition to the other condition, means controlled by the condition of said electrical element for controlling said control means, and means for cyclically establishing electrical connection of said electrical element to said capacitor means.

16. In a control system for use in a machine for treating articles, the combination comprising, capacitor means, means including conductor means within said chamber for completing an electrical circuit through the articles for discharging said capacitor means, means for causing relative movements and random contacts between a plurality of articles and said conductor means, charging means for supplying an electrical charge to said capacitor means, an electrical element having a normally non-conducting condition and responsive to an electrical charge of predetermined value on said capacitor means to change to a conducting condition, means controlled by the condition of said electrical element, and means for cyclically establishing electrical connection of said capacitor means to said electrical element.

References Cited by the Examiner

UNITED STATES PATENTS

2,045,381	6/1936	Elberty	34—44
2,171,363	8/1939	Gulliksen.	
2,812,976	11/1957	Hasenkamp	324—65 X
3,180,038	4/1965	Chafee	34—45

FOREIGN PATENTS

877,553	9/1961	Great Britain.

WILLIAM F. O'DEA, *Primary Examiner.*

NORMAN YUDKOFF, *Examiner.*

J. J. CAMBY, *Assistant Examiner.*