Nov. 30, 1965 A. FEHER, JR 3,221,115

ACTUATOR CAM STRUCTURE FOR LINEARLY OPERATED SWITCH

Filed July 3, 1964 2 Sheets-Sheet 1

Fig.1

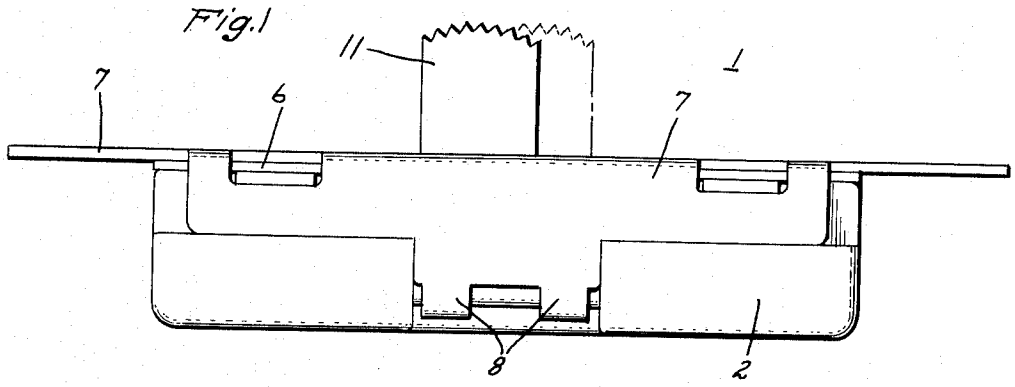

Fig.2

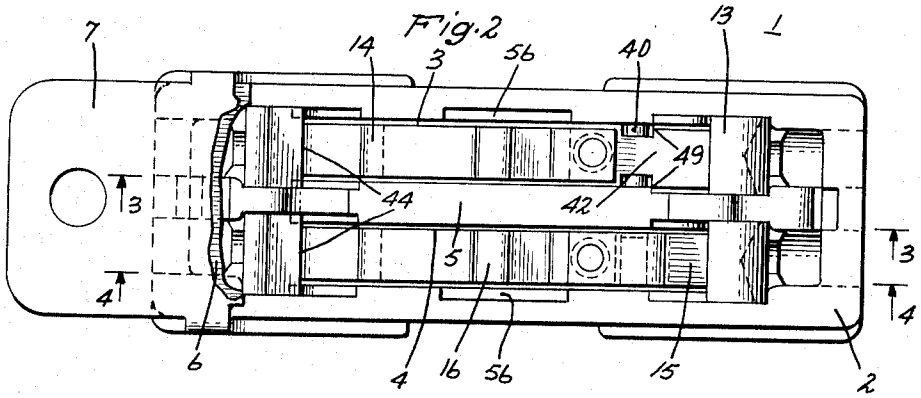

Fig.6

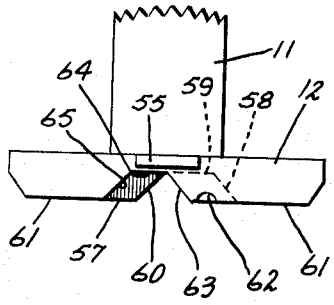

Fig.5

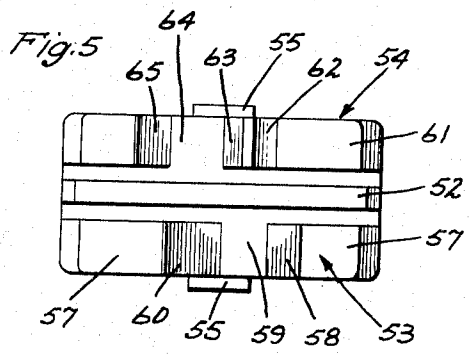

INVENTOR.
Alexander Feher, Jr.
BY Edward J Hanson Jr
Attorney.

ACTUATOR CAM STRUCTURE FOR LINEARLY OPERATED SWITCH

Filed July 3, 1964 2 Sheets-Sheet 2

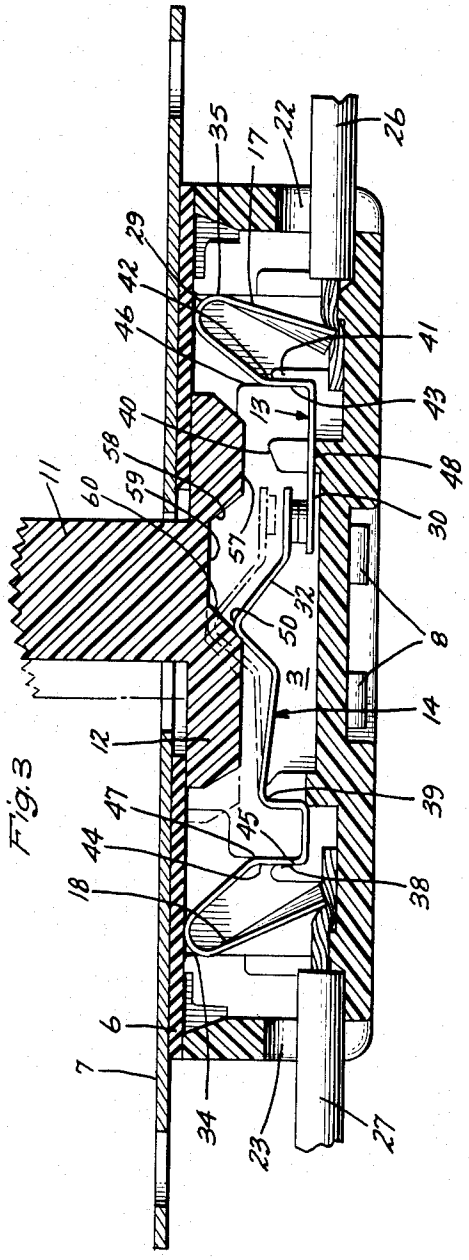

Fig. 3

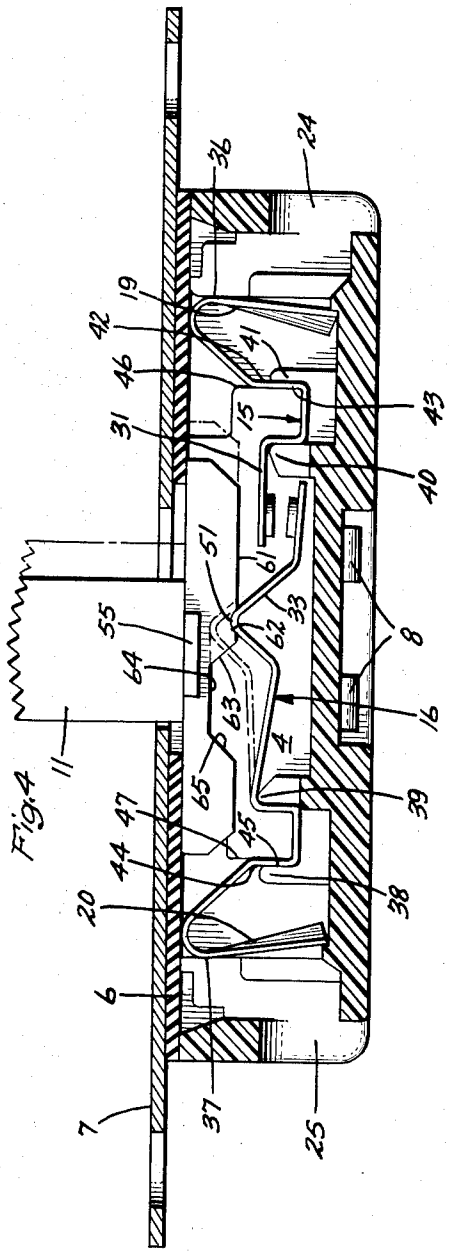

Fig. 4

INVENTOR.
Alexander Feher, Jr.,
BY Edward J. Hanson Jr.
Attorney.

United States Patent Office

3,221,115

Patented Nov. 30, 1965

1

3,221,115
ACTUATOR CAM STRUCTURE FOR LINEARLY OPERATED SWITCH

Alexander Feher, Jr., Bridgeport, Conn., assignor to General Electric Company, a corporation of New York

Filed July 3, 1964, Ser. No. 380,153
4 Claims. (Cl. 200—16)

My invention relates to electric switches and more particularly to small switches arranged for finger operation.

In certain switch applications there is a requirement that the switch have an automatic momentary characteristic in addition to detented on and off positions. Many switches have spring means for providing the momentary switch function, i.e., for returning the contacts automatically from the momentary position to the on or off position, as the case may be. Generally these switches have employed independent return springs with the inherent problems of added cost, additional assembly operations, and possibly increased failure rates.

It is accordingly, a general object of my invention to provide an improved low cost and simplified switch having momentary action.

It is a more specific object of my invention to provide a small finger operated switch of simplified construction which has few parts, and provides an automatic momentary start position, an on position, and an off position.

In carrying out my invention in one form thereof, I provide an electric switch having a housing formed of insulating material. First and second pairs of contacts are mounted side by side in the housing. A three position slider is also operably mounted in the switch housing. The slider is movable between an off position, a central on position and a momentary position, and includes a pair of cam tracks for respectively actuating the first and second pairs of contacts mounted in the housing. One contact in each pair is movable and biased into engagement with its cam track. When the slider is in the momentary position, the movable contact of the first pair of contacts is engaged by an inclined camming surface of its cam track. This movable contact because of its bias presses against the inclined surface urging the slider from the momentary position to the on position and as the contact moves in response to its bias it bears against the inclined surface and pushes the slider aside. When the contact reaches the end of the incline, the slider is in the on position and the bias of the contact will resist the slider moving back to the momentary position.

When the slider is in the on position, the other movable contact is also positioned at the inner end of an clined surface on its cam track. This other inclined surface faces in the opposite direction from the first mentioned inclined surface and resists the slider's moving toward the off position from the central on position. The engagement of the cam tracks with their respective contacts then releasably holds the slider in the on position when it is returned thereto from the momentary position by the action of the first contact against its cam track as described in the previous paragraph.

By a further aspect of my invention I have provided a detented off position by providing a detent recess at the outer end of the second mentioned inclined surface on the cam track which is enagaged by the movable contact of the second pair of contacts.

The subject matter which I regard as my invention is claimed in the concluding portion of this specification. My invention, however, both as to organization and method of operation together with further objects and advantages thereof, may be best understood by reference to

2

the following description taken in conjunction with the accompanying drawings in which:

FIG. 1 is a side elevational view of an electrical switch embodying my invention in one preferred form thereof;

FIG. 2 is a plan view of the switch of FIG. 1, with the cover partially broken away to show details;

FIG. 3 is a cross-sectional view of the switch taken on the line 3—3 of FIG. 2;

FIG. 4 is a cross-sectional view of the switch taken on the line 4—4 of FIG. 2;

FIG. 5 is a bottom view of the operating slide member included in the switch; and

FIG. 6 is a side elevational view of the slide member of FIG. 5.

Referring now to the drawings, I have shown therein an electric switch **1** which embodies my invention in one preferred form thereof. The switch **1** in certain of its aspects comprises an improvement in the switch arrangement disclosed and claimed in the Philip Hutt and Stewart A. Woodward application, Serial No. 282,619 filed May 23, 1963, and assigned to the same assignee as the present invention. The switch **1** includes a casing **2** formed of suitable insulating material such as phenolic resin. As may be best seen in FIG. 2, the casing **2** includes a pair of longitudinal cavities **3** and **4** extending from one end wall of the switch to the other. The two cavities are open at the top and are separated from each other by an intermediate wall **5** which extends for the length of the casing. The cavities **3** and **4** are covered at their tops by an insulating cover plate **6** which overlies the base **2**. The plate **6** is held on the base by a metal cover member **7** which is provided with flanges **8** (FIG. 1) that are bent under the lower surface of the base **2**. Suitable openings are provided in the insulating plate **6** and the cover **7** to accommodate the actuating handle or button **11** of a slide member **12**. The arrangement of the slide member **12** and its operation within the switch will be discussed in more detail hereinafter.

Each of the switch cavities **3** and **4** accommodates a separate pair of conductive switch elements or blades. Specifically, the cavity **3** has switch elements or contacts **13** and **14** disposed in it while the cavity **4** has switch elements **15** and **16** positioned in it (see FIGS. 3 and 4 respectively). These switch elements are formed of metal and preferably of a spring material such as Phosphor bronze, and each of them serves both as an operating contact and as a terminal in the switch.

In order to connect lead-in or conductor wires to the switch, each of the switch elements **13–16** is provided with a generally U-shaped terminal section. These terminal sections of the various switch elements are indicated respectively at **17**, **18**, **19** and **20**. It will be noted that the outer or free ends of these terminal sections are all located adjacent the bottom wall of the cavity. Further, slots or openings **22**, **23**, **24** and **25** are provided in the switch casings immediately in front of the terminal sections of the switch elements. These slots **22–25** are of the proper size to receive the conductor or lead-in wires of the switch and when the conductor wires, such as the wires **26**, **27** shown in FIG. 3, are inserted through these slots, the bared ends of the conductors are wedged between the tips of the terminal sections and the bottom wall of the casing. Specifically, referring to the terminal section **17** of the switch element **13**, it is effective to engage the bared end of the conductor **26** and lock the wires between its tip and the bottom wall of the casing. The terminal section **17** flexes readily to allow the entrance of the conductor but once the bared wires are pushed between the tip of the terminal and the casing, then a wedging action is provided which prevents the conductor from being withdrawn. It will be noted that each of the terminal sections includes a reverse bend such as the bend **29** of the terminal section

17 and when the conductors are inserted, flexing of the terminal sections occurs on both sides of this reverse bend. This flexing over a relatively long length on both sides of the bends prevents deformation of the terminal section and insures that its resiliency will be retained after the conductor wire is inserted.

Each of the switch elements or blades 13–16 also includes a contact section. Thus the switch elements 13 and 15 each include a fixed contact section indicated at 30 and 31 respectively, while the switch elements 14 and 16 each include a movable contact section indicated at 32 and 33 respectively. It will be noted that the movable contact sections 32 and 33 of the switch elements 14 and 16 are positioned respectively in cooperating relationship with the fixed contact sections 30 and 31 of the switch elements 13 and 15, and by flexing the movable contact sections up and down the contact sections may be made to engage and disengage. For the best switching action, precious metal contacts, as for example silver contacts, are preferably formed on the contacting sections at their points of make and break. These contacts may be readily seen in FIGS. 3 and 4.

The switch elements are located in the cavities 3 and 4 of the casing by means of supporting shoulders or ribs which are molded on the side walls of the casing. Referring first to the terminal sections 17–20 of the switch elements, these sections are engaged by vertical ribs or shoulders formed on the opposite side walls of the cavities 3 and 4. Specifically, ribs 34–37 are provided in the cavity side walls and as may be seen in FIGS. 3 and 4, these ribs engage the terminal sections in the region of their reverse bends.

Besides the ribs 34–37, additional supports or shoulders are provided which engage the switch elements between their respective terminal sections and contact sections. In particular, two sets of opposed shoulders are formed in each end of the cavities. The shoulders in each set are of the same configuration, being positioned opposite each other on the side walls of each of the cavities. Specifically, at the left hand side of each cavity as viewed in FIGS. 3 and 4, two sets of shoulders 38 and 39 are formed whereas in the right side of each cavity shoulders 40 and 41 are formed. At the inner ends of the terminal sections of the switch elements there are cooperating shoulders formed on the switch elements themselves. In particular, the switch elements 13 and 15 have vertically extending portions 42 with shoulders 43 formed on them while the switch elements 14 and 16 have similar vertical portions 44 with shoulders 45 formed on them (see FIG. 2). The shoulders 43 of the switch elements 13 and 15 fit onto the casing supports or shoulders 41 in their respective cavities of the switch while the shoulders 45 of the switch elements 14 and 16 fit over and engage the supports or shoulders 38 of the casing. Also, it will be noted that the vertical portions 42, 44 engage vertical ribs 46, 47 on the cavity side walls immediately above the casing shoulders 38 and 41. This engagement of the switch elements with the casing both at vertical ribs and horizontal shoulders provides a firm support for the switch elements or blades adjacent the inner ends of their reverse bent terminal sections.

The insulating cover plate fits over the cavities 3 and 4, and it engages the switch elements or blades at their upper reverse bent portions. In particular, referring to the blade 13 the cover engages its terminal section 17 at the reverse bend 29. With this arrangement of the cover combined with the supports formed on the sidewalls of the cavities, the terminal section of each blade is engaged by the casing and the cover at four points. For example, referring to the terminal section 17 of switch blade 13, it is engaged by the cover 6 at its reverse bend 29, and by the casing rib 35 on the right side of the bend (as viewed in FIG. 3), while on the other side of the reverse bend it is engaged by the casing rib 46 and the shoulder 41. This four point engagement holds the terminal section 17 firmly in place while allowing it to flex when a conductor is inserted through the slot 24. As is apparent from the drawings and the above description, the same four point engagement or mounting is also used for the terminal sections of the other blades, and thereby in each case a secure mounting is provided without interfering with the wedging action when a conductor is inserted beneath the locking tongue.

To prevent the flexing of the terminal sections from affecting the contact portions of the blades, an additional support is provided for each blade between the terminal section and the contact section. Referring first to the blades 14 and 16, it will be noted that each of these blades is engaged by the shoulders 39 at the left hand end of its movable contact section (as viewed in FIGS. 3 and 4). This support precludes the flexing of the terminal sections from passing to the movable contact section. In addition, the supports or shoulders 39 displace or bias the movable contact sections 32 and 33 upwardly into engagement with the slide member 12.

Referring now to the switch elements or blades 13 and 14, each of these blades is likewise engaged by an additional support to prevent the flexing of its terminal section from affecting its contact section. Specifically, the blade 13 is engaged by a transverse boss 48 on the bottom wall of the cavity 3. As is best seen in FIG. 2 suitable notches 49 are formed in the sides of the blade 13 to allow clearance for the shoulders 40 so that the blade may rest on the boss 48. Blade 15 is engaged by the shoulders 40 inwardly of its terminal section as seen in FIG. 4.

It will be seen that the contact sections of the blades 13 and 15 are of somewhat different shape so that the stationary contact carried by the blade 13 lies below the movable contact of the blade 14, while the stationary contact carried by the blade 15 lies above the movable contact of the blade 16. Thus with the movable sections of the contact blades 14 and 16 being biased upward against the slide member 12, the blades 13 and 14 form a normally open switch in cavity 3 while the blades 15 and 16 form a normally closed switch in the cavity 4.

Referring to FIGS. 3 and 4, the movable contact sections 32 and 33 of the blades 14 and 16 each includes a V-shaped rise or bump between the contact mounted on the blade and the supporting shoulders of the casing. Specifically, a rise 50 is formed on the blade 14 while a similar rise 51 is formed on the blade 16. These rises or bumps underlie the slide member 12 which is itself positioned below the insulating cover plate 6. The slide 12 includes a center section 52 (FIG. 5) which rides on the transverse wall 5 of the base, and on either side of the center section 52 the slide is provided with cam tracks 53 and 54. Flanges 55 ride in two shallow slots 56 in the top surfaces of the casing side walls (FIG. 2) to insure that the slide will have level sliding movement. The cover plate 6 closes the slots 56 from above and traps the flanges 55 in the slots. The openings in the insulating plate 6 and the cover 7 are larger than the size of the handle 11 and the slide 12 is movable back and forth between an off position, a central on position and a momentary position. These positions are indicated in FIG. 1. In FIG. 3, the slider is shown in solid line in the momentary position while in FIG. 4 it is shown in solid line in the off position.

Turning now to a detailed discussion of an important aspect of my invention, I will describe my cam tracks 53 and 54 and their coaction with the movable contact blades 14 and 16 respectively. Looking first at FIGS. 3, 5 and 6, and in particular at FIGS. 5 and 6, it can be seen, moving from right to left, that cam track 53 has a base level 57, an inclined surface 58, a lower surface 59, and an inclined switching surface 60 rising back up to base level 57. Cam track 54 has a base level 61, which is at the same level as the base level 57 of cam track 53. Again, from right to left in FIGS. 5 and 6, cam track 54 has a detent recess 62 in the base level 61, an inclined

switching surface **63**, a lower surface **64**, and an inclined surface **65** rising back up to the base level **61**.

Looking now at FIG. 3 the operation of cam track **53** and the movable contact element **14** will be explained. The cam track **53** and the movable contact **14** are shown in solid line in the momentary position with the resilient movable contact **14** fully depressed and closed with fixed contact **13**. In this position the contact **14** by its inherent resiliency is biased, i.e., pushing against the inclined surface **60** at its outer edge urging the slide **12** to the left in the drawing. To maintain this momentary position it is necessary to hold the handle **11** in position by force and when such force is released the slide will be moved to the left by the resilient contact **14** bearing against the inclined switching surface **60**. This is an automatic action.

As the slide moves to the left the contact **14** is allowed to open from contact **13**. When the movable contact **14** reaches level **59** at the bottom of the incline, it presses against this surface which is transverse to the direction of the pressure. Thus, there is no longer any component of force tending to move the slide to the left and this results in the automatic positioning of the slide in the on position as shown by the broken lines in FIG. 3. When the switch handle **11** is pushed to the left hand or off position, the lower surface **59** provides sufficient clearance for rise **50** of the movable blade to maintain contacts **13** and **14** open.

Turning now to FIG. 4, the operation of cam track **54** and movable contact element **16** will be explained. The cam track **54** and the movable contact **16** are shown in solid line in the off position with the rise **51** of the resilient movable contact **16** engaged in the detent recess **62**. The resilient bias of the contact **16** presses it into firm engagement with cam track **54** detenting the slide. The slide can be moved by force (applied by an operator's finger in the embodiment shown) from the detented off position to the on position. The rise **51** of the contact **16** (which is biased upwardly as viewed in FIG. 4) will travel over the inclined switching surface **63** to close with fixed contact **15**. As the switch handle is pushed into the momentary position the lower surface **64** allows the contacts **15** and **16** to remain closed.

As the slide is returned from the momentary position to the on position, switching surface **60** opens contacts **13–14** as explained above, but surface **64** allows switch **15–16** to remain closed. Thus, contacts **15–16** are closed in both the momentary position and the on position while contacts **13–14** are closed only in the momentary position.

In the on position the engagement of inclined surface **60** with contact **14** restrains the slide from moving toward the momentary position. This restraint is provided because movement to the momentary position would necessitate the contact **14** moving back over the inclined surface against its natural bias. The engagement of inclined surface **63** with contact **16** in the on position restrains the slide from moving toward the off position. Such movement, it will be seen, would necessitate the contact **16** moving back over inclined surface **63** against its natural bias. Thus, the oppositely facing inclines and their engagement with the movable contacts produce a detenting action to releasably hold the slider in the on position after it returns there from the momentary position. In other words a central detented slider position is provided by the action of the opposed inclines, which face in opposite directions, and their contacts restraining slider movement in either direction.

The side elevational view of the slide **12** in FIG. 6 further shows the opposed inclined surfaces **60** and **63** which form the detent by their engagement with the contact. In effect, these surfaces form a V, which by its engagement with the contacts restrains movement of the slider from the on position in either direction.

From the above it will be seen that I have provided an improved switch having cam surfaces which cooperate directly with the switch blades to supply an automatic momentary switch action and detented on and off switch positions. This has been done in a manner providing simplicity in construction and dependable switch performance. The switch may be readily assembled merely by dropping the switch blades in the switch cavities and then assembling the slide member and the cover over them. The engagement of the cover with the terminal portions of the switch blades assures that they are held firmly on the supports of the housing, and provides the bias of the blades against which the slide member works to provide the switching action.

While in accordance with the patent statutes I have described what at present is considered to be the preferred embodiment of my invention, it will be obvious to those skilled in the art that various changes and modifications may be made therein without departing from the invention and it is therefore intended in the appended claims to cover all such modifications as come within the true spirit and scope of the invention.

What I claim as new and desire to secure by Letters Patent of the United States is:

1. An electric switch comprising an insulating housing; first and second elongated movable contacts mounted side by side in said housing; a pair of fixed contacts engageable respectively by said movable contacts; a contact actuating slider mounted on said housing over said contacts; said actuating slider having a pair of cam tracks on the lower surfaces thereof; one of said cam tracks engaging said first movable contact for actuating said first movable contact relative to its fixed contact; the other of said cam tracks engaging said second movable contact for actuating said second movable contact relative to its fixed contact; said actuating slider being movable between three spaced apart positions comprising an off position, a central on position and a momentary position; said one cam track having an inclined surface engaging said first movable contact when said slider is in said momentary position, said first movable contact being biased against said inclined surface for returning said slider from said momentary position to said on position and for restraining said slider from moving toward said momentary position; said other cam track having an inclined surface engaging said second movable contact when said slider is in the on position for restraining said slider from moving toward said off position; whereby the engagement of said cam tracks with said contacts releasably holds said slider in said on position after its return thereto from said momentary position by the action of said first contact.

2. An electric switch comprising a housing; first and second movable contacts mounted in said housing; a pair of mating contacts engageable respectively by said movable contacts; a contact actuating cam mounted on said housing; said actuating cam having a pair of cam tracks; one of said cam tracks engaging said first movable contact for actuating said first movable contact relative to its mating contact; the other of said cam tracks engaging said second movable contact for actuating said second movable contact relative to its mating contact; said actuating cam being movable between three positions comprising an off position, a central on position and a momentary position; said one cam track having an inclined surface engaging said first movable contact when said actuating cam is in said momentary position, said first movable contact being biased against said inclined surface for returning said actuating cam from said momentary position to said on position and for restraining said slider from moving toward said momentary position; said other cam track having an inclined surface engaging said second movable contact when said slider is in the on position for restraining said slider from moving toward said off position.

3. An electric switch comprising an insulating housing; first and second elongated movable contacts mounted side by side in said housing; a pair of fixed contacts engageable

respectively by said movable contacts; a contact actuating slider mounted on said housing over said contacts; said actuating slider having a pair of cam tracks on the lower surfaces thereof; one of said cam tracks engaging said first contact for actuating said first contact relative to its fixed contact; the other of said cam tracks engaging said second contact for actuating said second contact relative to its fixed contact; said actuating slider being movable between three spaced apart positions comprising an off position, a central on position and a momentary position; said one cam track having a base level; an inclined switching surface extending below said base level; said first contact biased against said inclined surface when said slider is in the momentary position and sliding over said inclined surface to push said slide from the momentary to the on position and open said first movable contact from its fixed contact, and said one cam track having a continuous lower level for holding said first movable contact open from its fixed contact when said slider is moved from the on to the off position, said other cam track having a base level; a detent recess in the surface of said base level; said second contact being biased into said detent recess when said slide is in the off position to detent said slide in the off position; said other cam track having an inclined switching surface extending below said base level; said second contact sliding over said inclined switching surface to close said second contact with its fixed contact; and said other cam track having a continuous lower level for holding said second movable contact closed with its fixed contact when said slide is moved from the on to the momentary position, said inclined surface of said one cam track and said inclined surface of said other cam track facing in opposite directions and in the on position being engaged with their respective movable contacts to releasably hold said slider in said on position after its return thereto from said momentary position by the action of said first contact.

4. An electric switch comprising a housing having walls defining a pair of cavities; first and second movable contacts mounted respectively in said cavities; a pair of fixed contacts mounted respectively in said cavities and engage-

able respectively by said movable contacts; support means formed on the walls of said housing for supporting and locating said switch contacts in said cavities; a cover having an inner surface formed of insulating material closing said cavities and engaging said contacts to hold said contacts against said support means for said housing; the engagement of said cover and said support means with said contacts biasing the movable contact of said first switch to a normally open position relative to its associated fixed contact and the movable contact of said second switch to a normally closed position relative to its associated fixed contact; a slide member held on said casing by said cover member and having a pair of cam control tracks, said slide member having three spaced apart switching positions comprising an off position, a central on position and a momentary position; said slide member being movable by external force from off through on to the momentary position, both sets of said contacts being closed in said momentary position; one of said cam tracks having an inclined surface engaging said first movable contact when said slider is in said momentary position; said first contact member being biased against said inclined surface for returning said slider from said momentary position to said on position and for restraining said slider from moving toward said momentary position; said other cam track having a detent recess at said off position to restrain said slider in said off position and an inclined surface between the off position and the on position; said inclined surface of said one cam track and said inclined surface of said other cam track facing in opposite directions and in the on position being engaged with their respective movable contacts to releasably hold said slider in said on position after its return thereto from said momentary position by the action of said first contact.

References Cited by the Applicant

UNITED STATES PATENTS

1,187,565	6/1916	Tauber.
1,909,642	5/1933	Watts.

KATHLEEN H. CLAFFY, *Primary Examiner.*