Nov. 16, 1965 J. RABINOW 3,218,061

PNEUMATIC PICK OFF FOR PERFORATED CARDS

Filed Oct. 7, 1963

Fig. 1

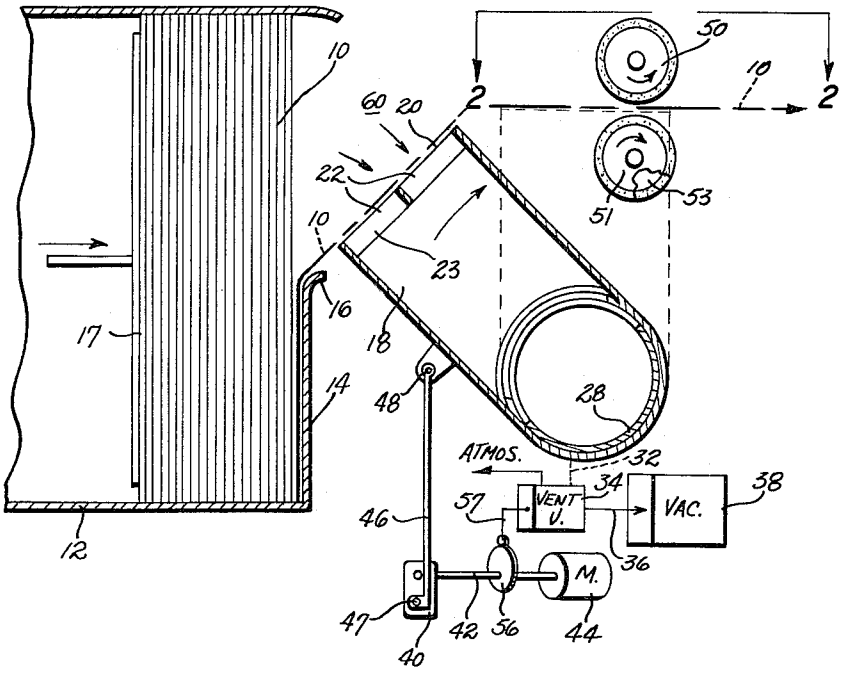

Fig. 2

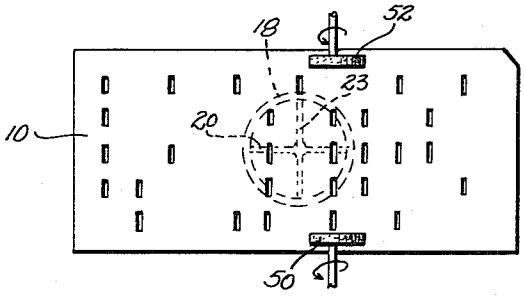

Jacob Rabinow
INVENTOR

Joseph A. Genovese &
Mat L. Libman
Atty,

United States Patent Office

3,218,061

Patented Nov. 16, 1965

1

3,218,061

PNEUMATIC PICK OFF FOR PERFORATED CARDS

Jacob Rabinow, Bethesda, Md., assignor, by mesne assignments, to Control Data Corporation, Minneapolis, Minn., a corporation of Minnesota

Filed Oct. 7, 1963, Ser. No. 314,561
2 Claims. (Cl. 271—11)

This invention relates to sheet and card handling devices, and particularly to a feeder to extract individual perforated cards from a stack, by the use of a suction system.

Card-feeders have been in extensive commercial use for many years. Pneumatic feeders are successfully used with imperforate sheets, cards, letter mail, etc. However, perforated cards, such as the usual 80 or 90 column punched cards, have not, to my knowledge been successfully fed from a stack by means of a penumatic feeder. If one attempts to use an ordinary vacuum suction head to extract a punched card from a stack, the "doubles" (two cards picked up simultaneously) difficulty is immediately experienced. The reasons for this, of course, is that conventional heads used in pneumatic feeders are large area contacting devices. Thus, the portions of the second card behind the holes in the first card becomes directly exposed to the suction of the head. As a matter of fact, "doubles" are often experienced in feeding imperforate, but porous, sheets through which air is drawn by the suction of the pick up head.

Since pneumatic pickup devices present advantages over purely mechanical pickup devices, I endeavored to develop a pneumatic pickup device which can be successfully and satisfactorily used with ordinary punched cards. My first approach was to design a head having a card-confronting surface provided with an arrangement of slots such that they oppose all or part of the imperforate area of the card. In other words, the slot (or hole) pattern would be such as to oppose only the intercolumn space portion (and/or the card borders). By this means, I would eliminate the card perforation areas from consideration. Although this can be done, it introduces a very difficult positioning problem, and will probably result in a large percentage of "doubles" if there is slight misalignment between the head and the cards, owing to leakage through the card perforations. This same difficulty is envisioned for all suction heads which are flush against the card at the time that the card is moved away from the stack (pulled or flexed).

Therefore, I decided upon another approach to the problem of pneumatic feeding of perforated cards, where the perforations are in random positions (with respect to the suction head). I positioned the head with its major area spaced from the end card of the stack and found that by using a comparatively large-area, strong suction in a manner such as to form a low pressure zone in the space between the suction head and the end (top or bottom) card of a stack, I could flex a portion of the card away from the stack without similarly flexing the card immediately behind it, even though the cards contain the usual data-defining perforations.

In the illustrated embodiment of my invention I have a surface to form a transverse hinge axis about which a portion of the card bends when that portion is subjected to the above mentioned low pressure zone. When the card portion flexes (usually very rapidly), it throttles the air intake of the suction head. Thus, even though there is a very minor pressure reduction behind the flexed or deflected card (owing to the perforations in the card), it is far too weak to draw the second card of a stack toward the suction head.

The pneumatic action of my feeder is as follows; the

2

opening (or openings) of the suction head is positioned in spaced relationship to the end (or top or bottom card of the stack) and a rather large capacity vacuum system is used to generate a comparatively large-area, highly energized vacuum zone. Accordingly, a considerable area of the card (for instance one half of the card) is exposed directly to the suction so that the area of the holes in the end card is small in comparison to the imperforate area. Accordingly, it is quite simple to provide the above vacuum zone of a strength sufficient to flex the end card, a large part of whose area is exposed to the vacuum, but not sufficiently large to cause the second card to flex because the vacuum acts through only the small holes in the flexed card. Furthermore, if the second card begins to move with the end card of the stack, it will move only a very short distance until atmospheric air seeps between the end card and the card behind it, at which time the suction between cards is broken while the first card accelerates as it bends toward the suction head.

Accordingly, an object of my invention is to provide a suction feeder to extract individual perforated flexible cards from a stack by forming a large area vacuum zone between the face of the end card of a stack and a suction head in a manner such that the end card rapidly bends away from the stack and is drawn against the face of the suction head, after which the suction head may be moved to completely extract the card from the stack.

Other objects and features of importance will become apparent in following the description of the illustrated form of the invention which is given by way of example only.

FIGURE 1 is a partially schematic side sectional view showing two approximate relative positions of a stack of cards and my suction, and also diagrammatically showing in perspective the suction source, valving and drive mechanism for the suction head.

FIGURE 2 is a fragmentary top view taken along the line 2—2 of FIGURE 1.

As I have indicated previously, my invention is concerned with a pneumatic feeder for perforated cards, for example conventional punched cards **10** (FIGURE 2) having columns of hole positions, some of which are punched to define codes. Cards **10** are arranged in a stack within support **12** (FIGURE 1) having a comparatively short wall **14** with a transverse round edge **16** at its upper edge. The edge defines a hinge axis for the flexible cards (FIGURE 1) as will be described in more detail later. A conventional pusher **17** can be used to maintain the stack of cards at the front of support **12** when horizontal (shown), however, pusher **17** is not required if the stack of cards is vertical (not shown).

Suction sead **18** has a front surface **20** with one or more openings **22** defined by web **23** which prevents thin or highly flexible sheets, cards, etc. from being sucked into the cavity of head **18**. Head **18** is mounted for oscillation on a ported conduit **28** which is connected by conductor **32** (FIGURE 1) to a vent valve **34**. The valve, in turn, is connected to vacuum source **38** by way of conduit **36**. Accordingly, the head **18** is exposed to the suction of vacuum source **38**.

The head **18** is oscillated by a suitable driver, for example crank **40** attached to shaft **42** of motor **44**, and connecting rod **46** attached to the crank pin **47** and to eccentric pin **48** secured to the side wall of head **18**. Thus, when motor **44** is energized head **18** executes an arcuate, oscillatory motion, much like, if not identical to many prior pneumatic feeder heads, e.g. as in Patent No. 2,979,329.

As shown in FIGURES 1 and 2, a conventional takeaway device represented by two pairs of driven rollers **50**, **51** and **52**, **53** is located to the sides of surface **20**

and head 18 when head 18 is the position shown by dotted lines (FIGURE 1). The cards are fed into the take away device during the up-stroke of pneumatic head 18. To facilitate sliding the card off surface 20, vent valve 34 is actuated in time with the motion of head 18. For this purpose I have illustrated a cam 56 on motor shaft 42 which is engaged by the valve-actuation arm 57. Cam 56 is so designed that when head 18 approaches the position shown in dotted lines in FIGURE 1, valve 34 is operated to vent head 18 and temporarily close off the vacuum source from the head.

Attention is now directed to FIGURE 1. When the pneumatic head is in the position shown in FIGURE 1, vacuum source 38 acting through head 18 provides a comparatively large-area zone 60 of suction which acts on the portion of the end card in the stack which confronts head surface 20. The surface 20 is either entirely spaced (as shown) from the confronting card, or is arranged at an angle such that only a very small portion of the lower edge of surface 20 contacts the end (which can be top, bottom or side) card in the stack. In the former case (shown) bent edge 16 forms a hinge axis about which the upper portion of the end card of the stack flexes as it is sucked toward and against the face of head 18. Once the end card begins to bend, it moves closer to the surface 20 of the suction head and is, therefore, pulled with greater force toward surface 20. In practice, the action is very fast so that the upper portion of the end card snaps against surface 20. The second card in the stack usually does not move perceptibly toward surface 20, and if it does move, the motion is exceedingly small because the end card will soon separate from the second card enough for atmospheric air to get between the two cards thereby breaking the suction on the face of the second card.

When the portion of the card adheres to surface 20, head 18 begins to oscillate and when the card achieves the position shown in dotted lines (FIGURE 1) the leading edge of the pneumatically held, perforated card is fed into the take away device which removes the card. Then, head 18 returns to the position shown in full lines to attract the upper portion of the "new" end card of the stack.

It is understood that various changes, modifications and alterations may be made without departing from the protection of the following claims. For example, my feeder can feed the cards from the end of a stack, and it does not matter whether the end is the top or bottom or side of a column of cards. In other words, FIGURE 1 can be turned 90° or 180° (or any included angle) and my feeder will operate equally well.

I claim:

1. A feeder to extract and transport individual perforated flexible cards from a stack, said feeder including means to establish a flexure axis about which a first portion of the end card of the stack is bendable while the remaining portion of the card remains in the stack, a suction member having a card-portion engaging flat surface located at a first position laterally spaced from and at an angle to said portion of said end card, the angular position of said surface being such that the edge of the surface nearest to said axis establishing means is also nearest to said card, a vacuum source connected with said member and providing a low pressure zone between the face of said card portion and said surface, said zone being of a pressure which is low enough with respect to the bending resistance to motion offered by the card including the imperforate area of the card portion and the flexibility of the material of the card to rapidly move the card portion against said surface by bending about said axis, said card portion acting to throttle said suction member as said card portion is sucked against said surface, and the leakage through the perforations being insufficient to attract the second card of the stack to said surface, means for moving said suction member with the adhered card from said first position to a second position spaced from the first position thereby causing the suction member itself to mechanically move said card portion therewith, the direction of movement of said suction member and the length of the path traveled by said suction member being such as to require said suction member to slide the remaining portion of the card over the adjacent card of the stack and out from the stack, and a card take-away device at said second position for transporting said card to a remote location.

2. The feeder of claim 1 and valve means synchronized with the movement of said suction member to vent said suction member when said suction member is in the region of said second position.

References Cited by the Examiner

UNITED STATES PATENTS

2,806,695	9/1957	Carlisle	271—11
2,819,073	1/1958	Murray	271—11
2,956,802	10/1960	Huck	271—12

FOREIGN PATENTS

906,887	3/1954	Germany.

M. HENSON WOOD, JR., *Primary Examiner.*

ROBERT B. REEVES, *Examiner.*