Oct. 19, 1965 F. J. RUSSELL ETAL 3,212,806

RETURN SPRING MECHANISM FOR A LOCK

Filed June 4, 1963

Fig. 1

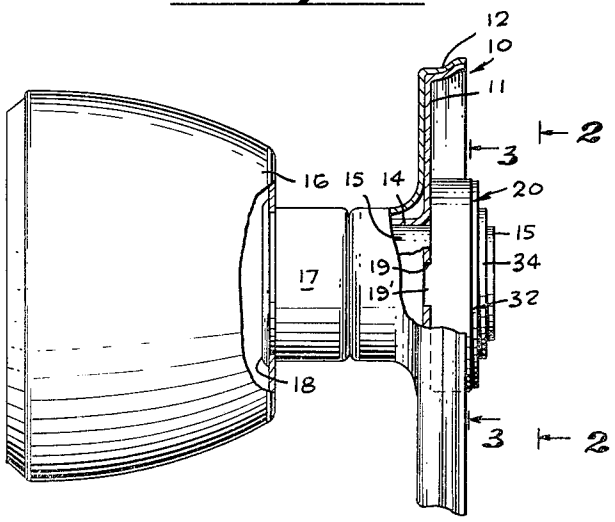


Fig. 2

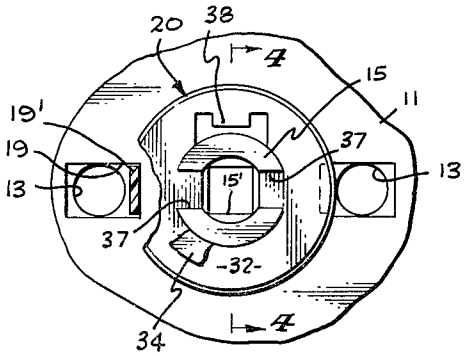


Fig. 3

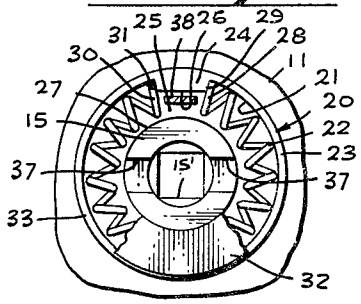


Fig. 4

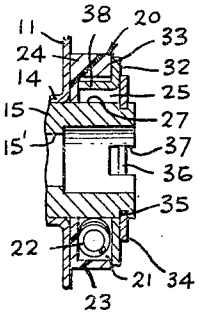


Fig. 5

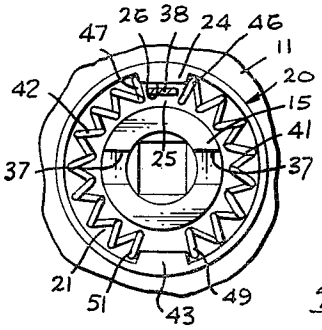


FRED J. RUSSELL
GEORGE B. SOLOVIEFF
INVENTORS

BY

Beehler & Shanahan
ATTORNEYS

United States Patent Office

3,212,806

Patented Oct. 19, 1965

1

3,212,806

# RETURN SPRING MECHANISM FOR A LOCK

Fred J. Russell, 8635 Otis St., South Gate, Calif., and George B. Solovieff, San Clemente, Calif.; said Solovieff assignor to said Russell

Filed June 4, 1963, Ser. No. 285,501
2 Claims. (Cl. 292—336.3)

The invention relates to door locks and in particular to a spring return for the operating member which is usually in the form of a knob. The mechanism involved is a spring resistance to rotation of the operating member arranged in such fashion that when the operating member is rotated, the spring is compressed. When released, the spring returns the operating member to its normal position.

The average door lock is so constructed that a spring at one location or another within the mechanism serves to hold the knob, handle, or operating member in an initial or neutral position, the spring being usually so constructed and mounted as to permit the operating member to be turned in either direction. Although a great variety of expedients are available to manufacturers of door locks by means of which the knob can be spring actuated as desired, many of these fail to take into consideration the necessity for occasionally disassembling the lock for various purposes. On many occasions the resilient return mechanism employed to return the knob to initial position is constructed in such fashion that it can be installed only at the factory where special tools are available and which, once installed, can be removed only at the expenditure of considerable effort and time.

Structure and parts heretofore employed for spring returns of the torsion spring character have made use of a considerable number of extra parts and the manner of mounting is one which leaves much to be desired from the point of view of simplicity. Further still, the construction of a torsion spring type of return usually requires the spring to be bent to configurations which tend to render the spring brittle and subject to breaking after being in use for a time.

It is therefore among the objects of the invention to provide a new and improved lock spring return mechanism which makes use of a compression spring.

Another object of the invention is to provide a new and improved lock spring return mechanism which in the employment of a compression spring makes possible a particularly compact and inexpensive spring mounting which is easy to assemble and disassemble.

Still another object of the invention is to provide a new and improved lock spring return mechanism which can be assembled as a unit in such fashion that it is easy to install in a door lock and also to remove therefrom.

Further included among the objects of the invention is to provide a new and improved lock spring return mechanism featuring in particular a compression spring means, thereby to make use of a spring which is particularly durable and almost never likely to break as the result of continued use.

With these and other objects in view, the invention consists in the construction, arrangement and combination of the various parts of the device, whereby the objects contemplated are attained, as hereinafter set forth, pointed out in the appended claims and illustrated in the accompanying drawings.

In the drawings:

FIGURE 1 is a side elevational view of an operating member for a door lock partially broken away to show the location of the lock spring return mechanism.

FIGURE 2 is an end elevational view on the line 2—2 of FIGURE 1.

2

FIGURE 3 is a cross-sectional view taken on the line 3—3 of FIGURE 1.

FIGURE 4 is a fragmentary longitudinal sectional view taken on the line 4—4 of FIGURE 2.

FIGURE 5 is a cross-sectional view similar to FIGURE 3 but showing a modified form of spring.

In the embodiment of the invention which has been selected for the purpose of illustration only, there is employed a fixed or stationary member indicated generally by the reference character **10** and which consists of a mounting plate **11** and a decorative rosette or escutcheon **12**. Following conventional practice, the mounting plate **11** is provided with holes **13** through which conventional bolts (not shown) extend and which ordinarily pass through the door for attachment to structure on the opposite side. The mounting plate **11**, also following conventional practice, may be provided with a bearing sleeve **14** for the mounting of the knob shank **15**, the knob shank **15** being rotatably mounted in the bearing sleeve **14**.

An operating member here shown in the form of a knob **16** has a knob neck **17** which extends from the knob shank **15**. The knob **16** is attached to the knob neck **17** at a staked-over portion **18**. A spindle (not shown) is nonrotatably engaged with the square hole **15'** in the knob shank **15** and various conventional means (not shown) attach to the spindle (not shown) in order to enable latch mechanisms to be manipulated by rotation of the knob **16** in either a right-hand or left-hand direction. In most locks, there is an initial position of the various parts which means that the knob **16** has a corresponding initial position to which it is adapted to be returned after operation. The lock spring return mechanism herein made the subject matter of this disclosure is for the purpose of resiliently retaining the knob in its initial position and for returning the knob to that initial postion after it has been rotated through an operatng cycle, all independently of any aid from the latch mechanism (not shown).

As shown in the drawings, there is provided a spring housing **20** which may advantageously be constructed of a low friction material such as one or another of the commercially available synthetic plastic resins, examples of which are nylon and Delrin. Within the spring housing **20** is an annular chamber **21** in which is nested a coiled compression spring **22**. Extending radially inwardly from an outer wall **23** of the spring housing **20** is a boss **24** which occupies approximately one-half of the transverse breadth of the annular chamber **21**, leaving a space **25** between an end wall **26** of the boss **24** and an inside wall **27** of the annular chamber **21**. To secure the spring housing **20** against rotation, a recess **19** in the mounting plate **11** is adapted to receive a projection **19'** of the spring housing **20**.

In actuality the inside wall **27** for the chosen embodiment comprises the exterior circumference of the knob shank **15**, as is readily apparent from an examination of FIGURE 4. One end **28** of the compression spring **22** bears against a side face **29** of the boss **24** and another end **30** bears against another side face **31** of the boss **24**. It is particularly significant to note the because of the boss **24** occupying only about one-half of the breadth of the annular chamber **21**, only about one-half of the area of the end of the spring **22** in each instance actually bears against the boss **24**, the remaining half of the area being free and accessible.

In the form of invention of FIGURES 1, 2, 3 and 4, the compression spring **22** is a single endless coil extending from the end **28** of the end **30** arcuately throughout the major portion of the circumferential length of the annular chamber **21**.

A spring plate **32** overlies an end wall **33** of the spring

housing **20**, the spring plate **32** being disc-like in form and being contained by a snap ring **34** of the usual characteristics which engages a recess **35** in the inner end of the knob shank **15**. Radially inwardly extending lugs **36** on the spring plate **32** are seated in slots **37** at the inner end of the knob shank **15**, and these render the spring plate **32** nonrotatably engaged with the knob shank **15**.

A spring driver **38** forming part of the spring plate **32** extends from the spring plate **32** axially inwardly, as shown in FIGURES 3 and 4, approximately at the axial center line of the annular chamber **21**, so that the spring driver **38** is positioned approximately in face-to-face contact with the end wall **26** of the boss **24**. It should be noted that because the end wall **26** of the boss **24** lies in a position about on the center line of the annular chamber **21**, the spring driver **38** will engage both the end **28** and the end **30** of the spring **22** at approximately the mid-point.

From the foregoing description it will be apparent that when the knob **16** is rotated in one direction, which direction will be assumed to impart a clockwise rotation to the knob shank **15**, as viewed in FIGURE 2 and 3, the spring plate **32** will simultaneously be rotated in a clockwise direction, as will also the spring driver **38**. Accordingly, the right-hand edge of the spring driver **38**, as viewed in FIGURE 3, will be pressed against the end **28** of the spring **22**, and the spring **22** will be compressed as rotation continues. Ordinarily, rotation will be through an arc of more or less ninety degrees, although the precise arc of rotation may vary appreciably. Further, in accordance with usual principles of spring performance, the coils of the spring **22** nearest the end **28** will compress to a somewhat greater degree than the coils near the mid-portion and the opposite end.

When the knob **16** is thereafter released, tension built up in the spring **22** will cause the spring **22** to expand in a direction counterclockwise against the spring driver **38**, and this will rotate the spring driver **38**, the spring plate **32**, and the knob shank **15** in a direction counterclockwise, as viewed in FIGURES 2 and 3, until the end **28** of the spring **22** engages the side face **29** of the boss **24**. Where this occurs, the spring **22** will be at the end of its expansive movement and the knob **16**, attached as described to the knob shank **15**, will be again at its initial position.

When the knob **16** is rotated in a contraray direction, causing a counterclockwise rotation of the spring driver **38**, as viewed in FIGURES 2 and 3, the spring driver **38** will press against the end **30** of the spring **22**, causing the spring **22** to compress and contract in the opposite direction. Thereafter, when the knob **16** is released, tension built up in the spring **22** acting against the left side of the spring driver **38**, as viewed in FIGURES 2 and 3, will cause the spring driver **38**, the spring plate **32**, the knob shank **15**, and knob **16** to be rotated in a clockwise direction, as viewed in FIGURES 2 and 3, until the end **30** of the spring **22** abuts against the side face **31** of the boss **24**, at which point the knob **16** will again be in its initial position.

Under those circumstances where the outer wall **23** of the spring housing **20**, or in any event the inside face of the outer wall **23** is constructed of low friction material, the spring **22** will expand and contract with great ease. The outer edges of the coils or turns of the spring **22**, when compressed and also when expanding, will tend to frictionally engage the inside surface of the outer wall **23** and will slide with extreme ease. Since it is always the tendency of the spring **22** to bow outwardly, there will be no frictional engagement during operation between the inside edges of the coils of the spring **22** and the inside wall **27** of the annular chamber **21**.

In the form of invention of FIGURE 5, the spring means takes the form of a double spring having springs **41** and **42** to make up a suitable compression spring means.



Other portions of the structure are essentially the same as described in connection with FIGURES 1, 2, 3 and 4, except that there is employed a second boss **43** which extends radially inwardly into the annular chamber **21** at the side diametrically opposite the location of the boss **24**.

As shown in FIGURE 5, one end of each of the springs **41** and **42** are adapted to bear against opposite sides of the boss **43** in position. Otherwise, the structure of FIGURE 5 operates in substantially the same fashion as does the structure of FIGURES 1, 2 and 3 in that the spring driver **38** presses against one or another of the springs **41** or **42**, as the case may be. When the spring driver **38** is pressed against end **46** of the spring **41**, the spring **41** compresses, and the spring **42** remains unaffected. When the knob **16** is released, tension built up in the spring **41** acts to return the spring driver **38** and the knob **16** to initial position. When the knob **16** is rotated in a direction causing a counterclockwise rotation of the spring driver **38**, as viewed in FIGURE 5, the spring **42** will compress as pressure is brought against its end **47** by rotation of the spring driver **38**; and in this instance, the spring **41** remains unaffected. Subsequent return of the knob **16** is accomplished, as will be apparent from the description, by expansion of the spring **42**.

Referring to the version described by FIGURES 2, 3 and 4, it is worthy of note that the spring housing **20** and the disc-like spring plate **32** comprise a substantially unitary package for packaging the compression spring **22**. These three parts can be assembled together and the spring **22** will remain in proper position because of the tendency for it to expand outwardly against the outer wall **23** of the housing **20**. The parts can be applied together over the inside end of the knob shank **15** and there anchored in place by operation of the snap ring **34**.

Although it is only rarely necessary to disassemble the parts once in position, should disassembly become necessary, the only operation needed is to remove the snap ring **34**, whereupon the spring housing **20** and spring plate **32** containing the spring **22** can be removed as a unit from the end of the knob shank **15**.

Moreover, because of the compression spring assembly herein described, initial or normal position of the knob **16** can be snugly held by reason of the ends **28** and **30** of the compression spring **22** being pressed snugly against opposite sides of the spring driver **38** and thus minimize to a substantially degree any likelihood of the knob **16** being possessed of any looseness. The strength of the compression spring **22** can be very easily chosen to provide all the desired spring tension which might be needed, but the freedom of motion of the compression spring **22** in its chamber **21** is so advantageous that a relatively light spring pressure is all that is needed to resist manual rotation of the knob **16** and to return the knob **16** to initial position after being released. Ample length is provided in the compression spring, irrespective of whether it may be the form of FIGURE 3 or the form of FIGURE 5, with the attendant advantages.

Such coiled springs are of substantially conventional construction. The technique of winding them is well established, and since no sharp bends are needed to fit the spring into its environment, there are no sharp corners to become broken off either because of bad bending or tempering or because of crystallizing during long periods of use. A compactness of construction and smoothness of operation is therefore enjoyed which is inherent in the composite assembly, details of which have hereinabove been described.

While the invention has herein been shown and described in what is conceived to be the most practical and preferred embodiment, it is recognized that departures may be made therefrom within the scope of the invention, which is not to be limited to the details disclosed herein but is to be accorded the full scope of the claims so as to embrace any and all equivalent devices.

Having described the invention, what is claimed as new in support of Letters Patent is:

1. In a door lock, a fixed member, an operating member rotatably mounted in said fixed member, a unitary spring assembly for one of said members including a spring housing having outer and inner circumferential walls forming a chamber, a compression spring means nested in said chamber with ends thereof in opposed relationship, a portion of said housing extending from the outer circumferential wall inwardly into the chamber and partly over the ends of the spring means to form a stop for said ends, a releasable nonrotatable connection between said housing and said one member, said connection being removed from and independent of said stop, the other of said members including a driver nonrotatably mounted thereon, a driver element on said driver extending into said chamber in a position inwardly of said stop and adjacent the ends of said spring means, said driver and the driver element thereon being movable in an arcuate direction alternatively against ends of the spring means upon manual rotation of the other of said members, causing compression of said spring means, said stop and said driver element being removable with the housing from said one member.

2. In a door lock, a fixed member, an operating member rotatably mounted in said fixed member, a unitary spring assembly for one of said members including a spring housing having an arcuate chamber having an outside arcuate confining wall, a portion of said wall extending into said chamber forming a stop and a compression spring means nested in said arcuate chamber with the ends in engagement with said stop, and a releasable nonrotatable connection having complementary engaging parts respectively on said housing and said one member, one of said parts being a depression and the other of said parts being a projeciton fitting in said depression, the other of said members including a driver nonrotatably mounted thereon and a driver element on said driver extending into said chamber at a location inwardly relative to said stop opposite at least one end of said spring means, said driver member having an arcuate path of movement corresponding in length to a predetermined movement of said operating member, the length of said arcuate confining wall being at least as long as said arcuate path of movement of the driver member, said driver and the driver element thereon being movable in an arcuate direction upon manual rotation of the operating member, causing compression of said spring means, said stop and said driver element being removable with the housing from said one member.




**References Cited by the Examiner**

UNITED STATES PATENTS

| | | | |
|---|---|---|---|
| 2,729,485 | 1/56 | Schlage | 292—1 |
| 2,812,204 | 11/57 | Squire. | |
| 3,073,640 | 1/63 | McBurnie. | |
| 3,156,495 | 11/64 | Holden | 292—336.3 |

FOREIGN PATENTS

| | | |
|---|---|---|
| 653,653 | 12/62 | Canada. |


JOSEPH D. SEERS, *Primary Examiner.*

M. HENSON WOOD, Jr., *Examiner.*