Aug. 17, 1965 H. T. HUTCHISON 3,201,542

MAGNETIC MECHANICAL SWITCH

Filed July 23, 1963 2 Sheets-Sheet 1

FIG. 2

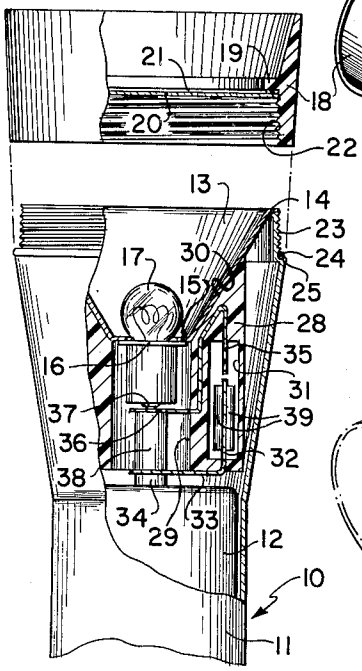

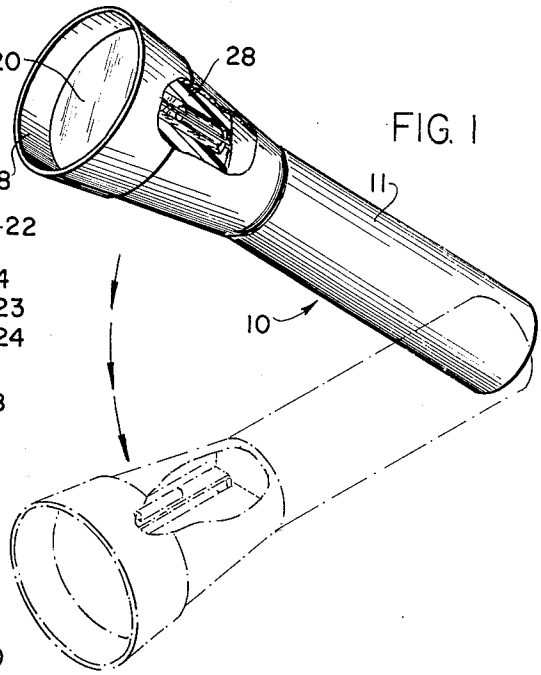

FIG. 1

FIG. 3

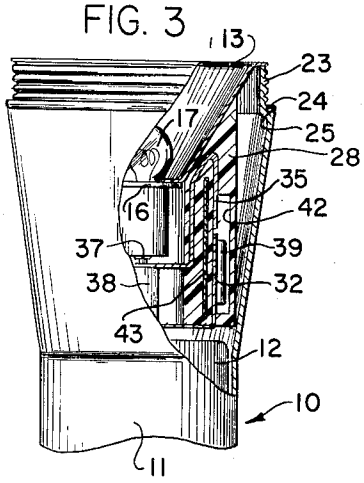

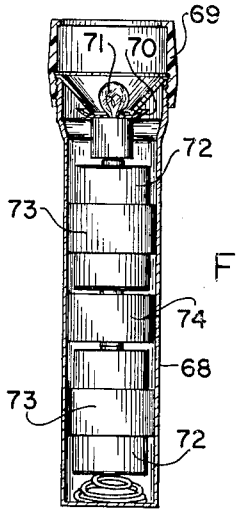

FIG. 6

INVENTOR
HOMER T. HUTCHISON

BY
ATTORNEY

Aug. 17, 1965

H. T. HUTCHISON

3,201,542

MAGNETIC MECHANICAL SWITCH

Filed July 23, 1963

2 Sheets-Sheet 2

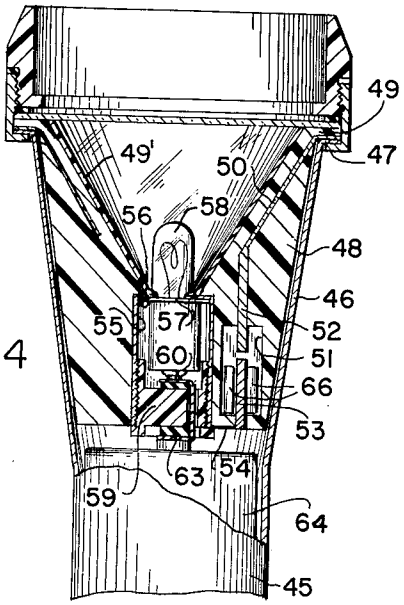

FIG. 4

FIG. 5

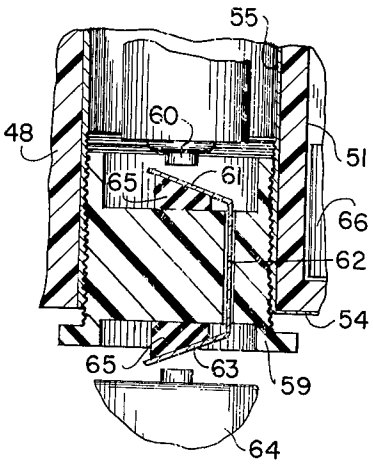

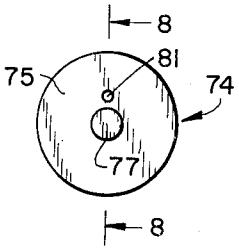

FIG. 7

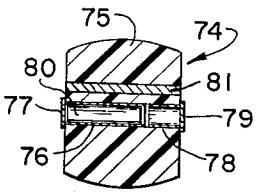

FIG. 8

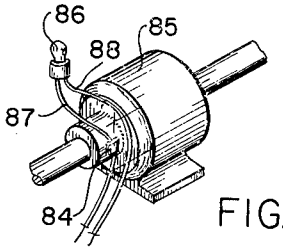

FIG. 9

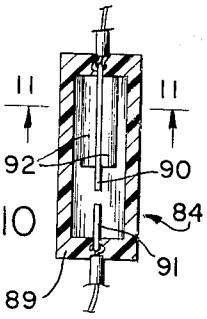

FIG. 10

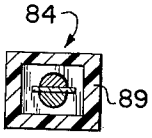

FIG. 11

INVENTOR

HOMER T. HUTCHISON

BY

ATTORNEY

United States Patent Office

3,201,542

Patented Aug. 17, 1965

1

3,201,542

MAGNETIC MECHANICAL SWITCH

Homer T. Hutchison, Getchell Mine, Golconda, Nev.

Filed July 23, 1963, Ser. No. 296,989
9 Claims. (Cl. 200—87)

This invention relates to the completing and interrupting of the flow of electrical energy from a source to an electrical element as well as to apparatus for controlling such flow from a remote position.

The invention relates particularly to a mechanical switch for completing or interrupting the flow of electrical energy in which the switch is responsive to the movement or vibration of the electrical element.

Heretofore, various mechanical switches have been provided, some of which have been operated mechanically, some have been operated by time controls, and some have been operated from a remote position. However, these prior switches have required additional elements such as springs or the like, or in the case of mercury switches have required that the position of the switch be changed and the switch remain in such position, or the contacts of these switches have been subject to oxidation and corrosion, and for various other reasons have been unsatisfactory.

It is an object of the invention to overcome the difficulties enumerated and to provide a mechanical switch which can be energized and de-energized by moving such switch in one direction or the other to cause a sliding contact to move.

Another object of the invention is to provide a flashlight with a totally enclosed switch so that the flashlight will be waterproof, explosive-proof and floatable.

Still another object of the invention is to provide a flashlight having non-oxidizing and non-corrosive contacts as well as a flashlight in which battery leakage will not affect operation of the contacts.

A further object of the invention is to provide a mechanical switch connected to a signalling device and mounted on apparatus in which vibration is required to be maintained at a minimum.

Other objects and advantages will be apparent from the following description taken in conjunction with the accompanying drawings in which:

FIG. 1 is a perspective illustrating one application of the invention,

FIG. 2, an enlarged fragmentary side elevation with portions broken away and illustrating one modification of the switch,

FIG. 3, a view similar to FIG. 2 of a slightly modified switch,

FIG. 4, a view similar to FIG. 2 of a further modified form of switch,

FIG. 5, an enlarged fragmentary exploded detail of the structure of FIG. 4.

FIG. 6, a vertical section of a flashlight having a switch disposed intermediate the batteries,

FIG. 7, an enlarged top plan view of the switch of FIG. 6,

FIG. 8, a section taken along the line 8—8 of FIG. 7,

FIG. 9, a perspective illustrating another application of the switch of the present invention,

FIG. 10, an enlarged vertical section of the switch of FIG. 9, and

FIG. 11, a section taken along the line 11—11 of FIG. 10.

Briefly stated the present invention is a mechanical switch including a body having a hollow portion into which a pair of contact plates project and such plates are substantially in alignment and in spaced relation with each other. One or more magnetic sliding contacts are located within the hollow portion and are adapted to

2

move by flipping, jerking or through vibration to either bridge a gap to make a circuit or to move away from the gap to break a circuit.

With continued reference to the drawings, FIGS. 1 and 2 illustrate one modification of the invention in which a flashlight 10 is provided with a casing 11 in which at least one battery 12 is received. A reflector 13 is located in the open end of the casing 11 and has an upper flange 14 which engages such open end and a lower flange 15 which engages the flange 16 of a lamp 17.

A lens holder 18 having an internal angular projection or flange 19 is provided with a lens 20 and a gasket 21 is disposed between the flange 19 and the lens 20 to prevent the passage of water and air when the lens holder is applied to the casing. The holder 18 has internal threads 22 which engage cooperating external threads 23 on the casing and, if desired, a gasket 24 may be disposed against a shoulder 25 on the casing 11 for engaging the end of the holder 18 to prevent the passage of water through such cooperating threads.

A generally cylindrical insulating block or member 28 is disposed within the casing 11 and such member has a central bore 29 and a frusto-conical recess 30 which cooperatively engages the reflector 13. The insulating member 28 has an opening or hollow portion 31 into which a non-magnetic contact plate 32 extends from the bottom of such insulating member and such contact plate has an inwardly extending lower portion 33 which engages the central post 34 on one of the batteries 12. A second non-magnetic contact plate 35 has a portion disposed within the hollow portion 31 substantially in alignment with and in spaced relation to the contact plate 32 and such upper contact plate terminates in an inwardly extending portion 36 which engages a contact 37 on the lamp 17. The inwardly extending portion 33 of the lower contact plate is spaced from the inwardly extending portion 36 of the upper contact plate by an insulating spacer 38.

In order to bridge the gap between the contact plates 32 and 35 within the hollow portion 31, a pair of magnetized metal slugs 39 are located within such hollow portion 31 and one of such slugs is disposed on each side of the contact plates. The slugs 39 are arranged with the poles in a position to attract each other and to exert a pulling force to maintain the slugs in engagement with the contact plates.

As illustrated in FIG. 2 the lower contact plate 32 extends into the hollow portion 31 a distance greater than the mid-point of such hollow portion and the upper contact plate 35 extends substantially less than half-way of the hollow portion and in spaced relation with the lower contact plate. The slugs 39 as illustrated in FIG. 2, are disposed adjacent to the bottom of the hollow portion and entirely in contact with the lower contact plate 32. When the flashlight is flipped in a downward direction, as illustrated in phantom in FIG. 1, the momentum of the slugs will overcome the coefficient of friction created by the magnetic attraction of the slugs to each other and cause the slugs to slide toward the upper end of the hollow portion.

The slugs are of a length to bridge the gap between the upper and lower contact plates when the slugs are bearing against the upper end of the hollow portion and will be retained in position by the magnetic attraction to each other. When the slugs are in the upper position the circuit will be completed and the lamp 17 will be energized. In order to interrupt the flow of electrical energy, the flashlight 10 may be flipped in the reverse direction to cause the slugs to move to the bottom of the hollow portion where they will no longer bridge the gap between the contact plates 32 and 35.

With reference to FIG. 3 a modified form of the invention is disclosed in which the insulating member 28

has a smaller opening or hollow portion 42 and in which the contact plates 32 and 35 extend along one side of the hollow portion 42. A ferrous plate 43 is imbedded in the insulating member 28 adjacent to the contact plates and a single magnetized slug 39 is adapted to move lengthwise of the hollow portion 42 and is attracted to the ferrous plate 43 to maintain the slug in position.

With reference to FIGS. 4 and 5 a modified form of flashlight is provided including a casing 45 having a frusto-conical upper portion 46 terminating in an annular flange 47. An insulating block or member 48 is disposed within the upper portion 46 and such insulating member is tapered to correspond to such frusto-conical upper portion. The insulating member 48 has an outwardly extending annular flange 49 of substantially the same diameter as the annular flange 47 of the casing, and such insulating member may have a tapered recess which is coated with a reflective non-conductive material 49'. A frusto-conical non-magnetic conductor 50 is imbedded within the insulating member 48 and projects outwardly of the insulating member at a point just below the annular flange 49 to form a contact flange which engages the flange 47 on the casing. The insulating member 48 has a hollow portion 51 into which one end of an upper non-magnetic contact plate 52 is adapted to project, the opposite end of said plate being connected to the conductor 50.

A lower non-magnetic contact plate 53 is disposed within such hollow portion in spaced aligned relation with the upper contact plate and such lower contact plate is connected by a strip 54 to a current carrying non-magnetic sleeve 55 located in the central portion of the insulating member. The sleeve 55 is provided with an inwardly extending annular flange 56 which engages the flange 57 of a lamp 58. The lower portion of the sleeve 55 threadedly engages a plug 59 constructed of plastic or other insulating material.

A contact 60 on the lamp 58 projects downwardly into engagement with the upper portion 61, a conductor strip 62 carried by the plug 59 and such conductor strip extends through the plug and has a lower portion 63 adapted to engage the post of a battery 64. If desired, a resilient member 65 constructed of sponge rubber or the like is located between the plug 59 and the upper and lower portions of the conductor strip to insure contact between the lamp and the battery. A pair of magnetic slugs 66 are located within the hollow portion 51 and operated in a manner similar to that described in relation to FIGS. 1 and 2.

Relative to FIGS. 6–8 a further modified form of the invention is illustrated and includes a flashlight having a casing 68 with a conventional lens holder 69, reflector 70 and lamp 71. The casing is adapted to receive a pair of batteries 72 each of which has a resilient band or spacer 73 about the same to prevent the shell of the battery from coming into contact with the casing 68 and thereby completing a circuit.

A switch 74 is disposed between the batteries 72 and includes a generally cylindrical body 75 of a diameter substantially equal to the inside diameter of the casing 68. A relatively long non-magnetic hollow sleeve 76 having a closed end 77 is mounted within said body substantially along the axis and such sleeve extends inwardly slightly more than one-half the length of the body 75. A relatively short non-magnetic hollow sleeve 78 having a closed end 79 is mounted within said body in longitudinal alignment with the long sleeve 76 and in spaced relation thereto. In this construction the end 77 projects outwardly of one side of the body 75 and the plate 79 projects outwardly of the opposite side of said body. A generally cylindrical magnetic slug 80 is located within the sleeves and is adapted to move from one end of the body to the other end when the casing is flipped.

In order to maintain the slug in position a ferrous rod 81 is located adjacent to the sleeves 76 and 78 and such rod will attract the slug 80 to hold such slug in position. The plate 77 is adapted to engage one of the batteries 72 and the plate 79 will engage the other of such batteries so that when the slug is disposed at one end of the body 75 it will bridge the gap between the sleeves 76 and 78 and complete a circuit to light the lamp. When the slug is at the opposite end of the body it will be totally received within the long sleeve 76 and the current will be interrupted.

It will be noted that the flashlight may have one or more batteries and that the switch 74 will function satisfactorily when inserted anywhere in the circuit.

With reference to FIGS. 9–11 a switch 84 is installed on an electric motor 85 or the like and such switch is connected to an indicator light 86 or other signalling device and to a source of power by electrical conductors 87 and 88. The switch includes a hollow body 89 which is mounted on the motor in any conventional manner and such body includes a relatively long non-magnetic contact plate 90 extending into the hollow body 89 from one end and a relatively short non-magnetic contact plate 91 extending into the hollow body from the opposite end and substantially in alignment with the contact plate 90. Both contact plates 90 and 91 are connected to the electrical connector 87. A pair of magnetic slugs 92 are disposed within the hollow body 89 in a position to attract each other.

When the body 89 is installed on the motor 85 the slugs 92 are located at the upper end of the body and are in engagement with the contact plate 90. In the event that the motor vibrates excessively the magnetic attraction of the slugs will be loosened and the gravitational pull on the slugs will cause such slugs to move downwardly until they bridge the gap between the plates 90 and 91 and permit electrical energy to flow through the conductor 87 and complete a circuit to the signalling device 86.

The switches described herein are waterproof and explosion-proof and moisture carrying air is excluded from the switches as well as from the contacts. Thus, the contacts will be non-oxidizing and non-corrosive and any battery leakage will not affect the operation of the switches or the contacts.

It will be apparent that a relatively simple mechanical switch has been provided which is totally enclosed within a housing and may be moved lengthwise thereof when such housing is moved rapidly in one direction whereupon such switch will either complete or interrupt the flow of electrical energy depending upon the direction of movement of the housing.

It will be obvious to one skilled in the art that various changes may be made in the invention without departing from the spirit and scope thereof and therefore the invention is not limited by that which is illustrated in the drawings and described in the accompanying claims.

What is claimed is:

1. In a flashlight, a mechanical switch comprising a body having a hollow portion, a first non-magnetic contact plate carried by said body and extending into said hollow portion a distance substantially more than half the length thereof, a second non-magnetic contact plate carried by said body and extending into said hollow portion a distance substantially less than half the length thereof, said second contact plate being in alignment with and spaced from said first contact plate, a pair of magnetic slugs located within said hollow portion and disposed in a position to attract each other, and said slugs being of a length less than the length of said first contact plate, whereby rapid movement of said body will cause said magnetic slugs to move by momentum to one end of said hollow portion to complete or interrupt the flow of electrical energy through said contact plates.

2. A mechanical switch comprising a body of insulating

material having a hollow portion, a first non-magnetic contact carried by said body and extending into said hollow portion a distance greater than half the length thereof, a second non-magnetic contact carried by said insulating body and extending into said hollow portion a distance less than half the length thereof, said first and second contacts being substantially in alignment and in spaced relation to each other, at least one magnetic slug located within said hollow portion and being of a length less than the length of said first contact, means for attracting said magnetic slug for holding said slug in position against at least one of said contacts, said first and second contacts being interposed in an electrical circuit and connected to a source of electrical energy, whereby movement of said body will cause said slug to move by momentum to a position adjacent to one end of said hollow portion to complete or interrupt the flow of electrical energy through said contacts.

3. The structure of claim **2** in which said means for attracting said magnetic slug comprises a ferrous member.

4. The structure of claim **2** in which said means for attracting said magnetic slug includes a second magnetic slug in which the poles are arranged in a manner to attract each other.

5. A mechanical switch comprising a body having a hollow portion, a first non-magnetic contact means carried by said body, one end of said contact means extending into said hollow portion a distance greater than half the length thereof, a second non-magnetic contact means carried by said body, one end of said second contact means extending into said hollow portion a distance less than half the length thereof, the contiguous ends of said first and second contact means being in spaced relation to each other, magnetic means slidably mounted within said hollow portion, and means for maintaining said magnetic means in engagement with at least one of said contact means.

6. In combination, a movable body having a mechanical switch, said body having a hollow portion, a first non-magnetic contact means mounted on said body, a portion of said contact means extending into said hollow portion, a second non-magnetic contact means mounted on said body and having a portion spaced from said portion of said first contact means, surfaces of said first and second contact means being in substantially the same plane, magnetic means slidably mounted within said hollow portion, said magnetic means being shiftable within the hollow portion of the body from a first position in which it engages said first contact means only to a second position in which it engages both of said contact means, and means for resisting slidable movement of said magnetic means within said hollow portion.

7. The invention of claim **6**, in which said magnetic means comprises a permanent magnet and said means for resisting movement is another magnetic body spaced from said magnetic means, said magnet and said body having opposing poles in adjacent relationship and being disposed on opposite sides of said contact means, whereby the frictional resistance to movement is increased.

8. The invention of claim **6**, in which said magnetic means is a permanent magnet and the means for resisting its movement is a body of ferromagnetic material, said magnet and said body disposed on the opposite sides of said contact means, whereby frictional resistance to the movement of said magnetic means is increased.

9. The invention of claim **6**, in which said magnetic means is a body of ferromagnetic material and the means for resisting movement is a magnet, said body and said magnet disposed on the opposite sides of said contact means, whereby resistance to movement is increased.

References Cited by the Examiner

UNITED STATES PATENTS

2,804,518	8/57	Cooley	200—98 X
2,972,739	2/61	Opper	200—61.52 X
3,025,372	3/62	Benson	200—67 X
3,162,376	12/64	Furuya	240—10.66

NORTON ANSHER, *Primary Examiner.*