Aug. 17, 1965 S. E. LEVY ETAL 3,201,530

MODULAR COMPONENT ASSEMBLY OF MICROPHONES

Filed Sept. 12, 1961 7 Sheets-Sheet 1

Fig. 1.

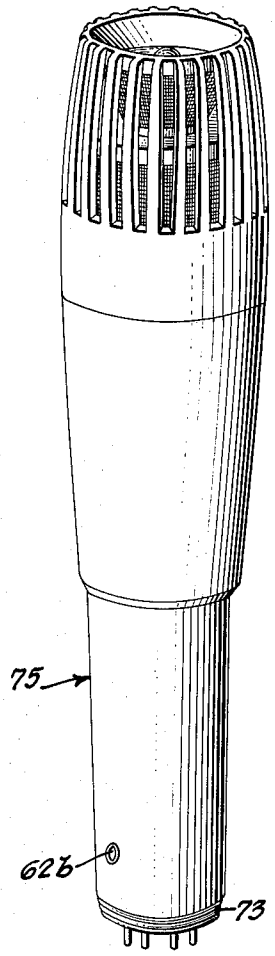

Fig. 3.

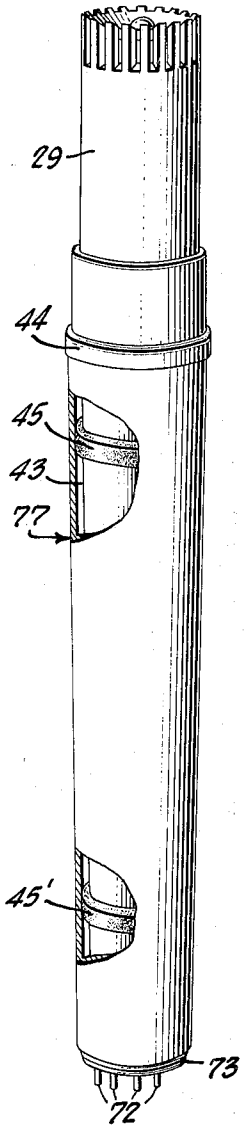

Fig. 2.

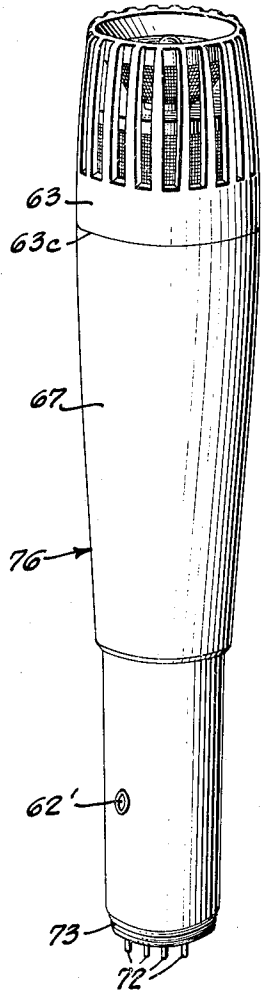

INVENTORS
SIDNEY E. LEVY
BERNARD C. SHARP

BY Elmon S. Nelson
ATTORNEY

MODULAR COMPONENT ASSEMBLY OF MICROPHONES

Filed Sept. 12, 1961 7 Sheets-Sheet 2

Fig. 4.

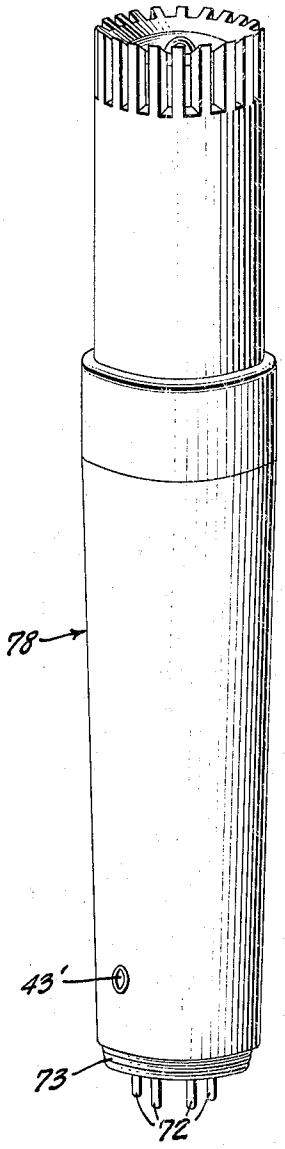

Fig. 5.

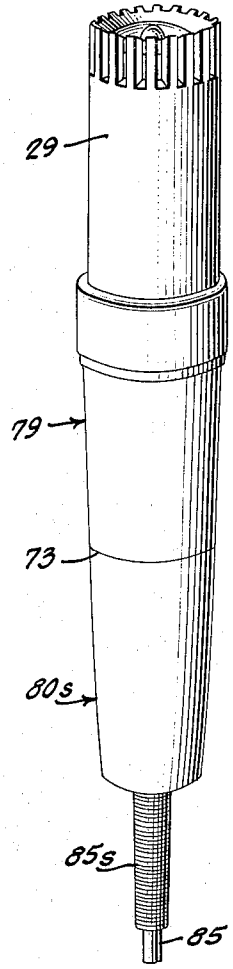

Fig. 6.

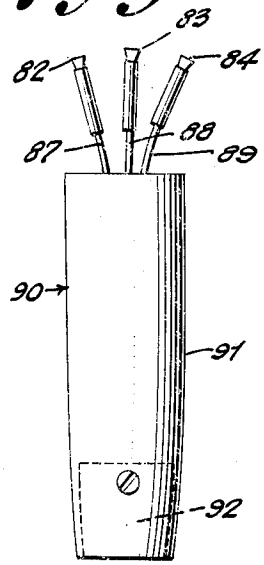

Fig. 7.

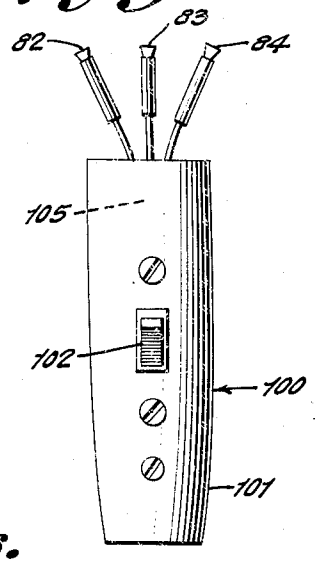

Fig. 26.

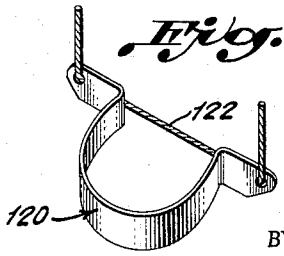

INVENTORS
SIDNEY E. LEVY
BERNARD C. SHARP
BY Almon S. Nelson
ATTORNEY

MODULAR COMPONENT ASSEMBLY OF MICROPHONES

Filed Sept. 12, 1961 7 Sheets-Sheet 3

Fig. 8.

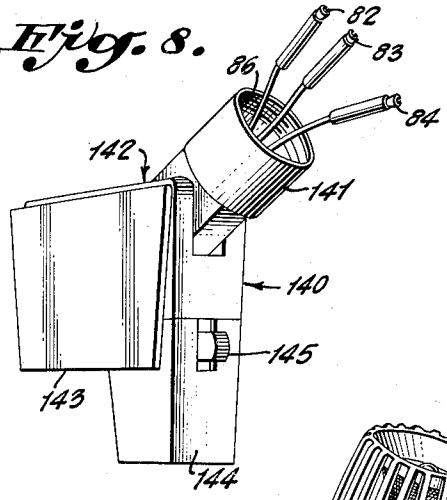

Fig. 9.

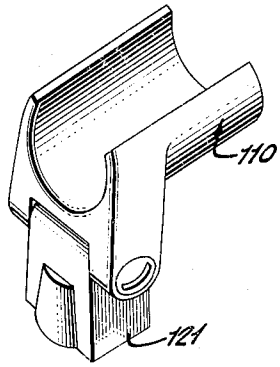

Fig. 10.

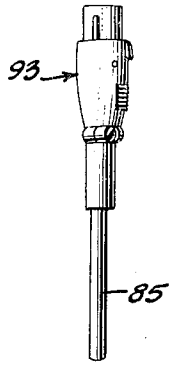

Fig. 21.

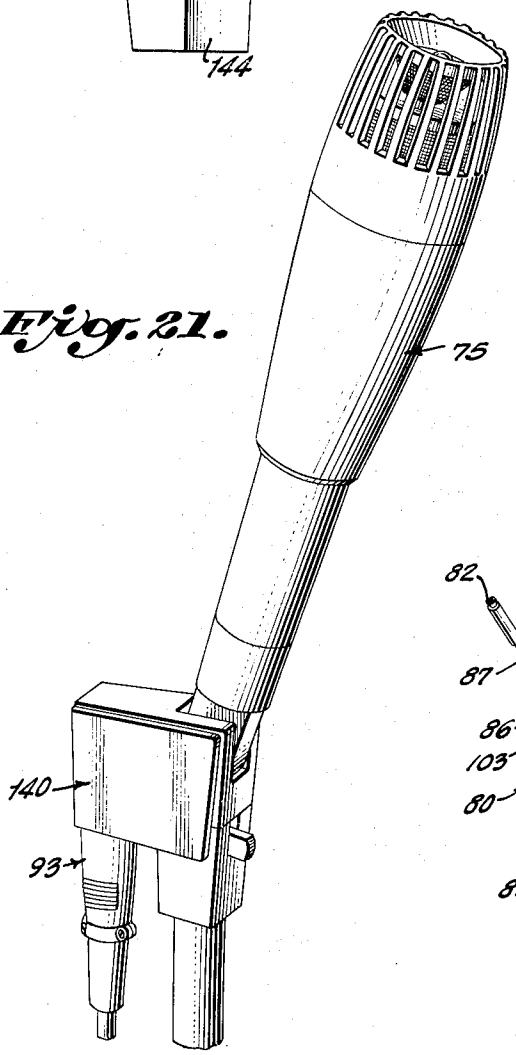

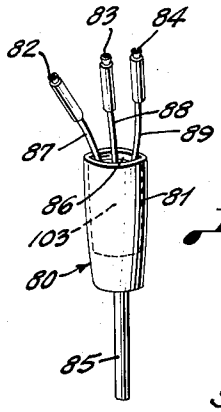

Fig. 11.

INVENTORS
SIDNEY E. LEVY
BERNARD C. SHARP

BY Almon S. Nelson
ATTORNEY

MODULAR COMPONENT ASSEMBLY OF MICROPHONES

Filed Sept. 12, 1961 7 Sheets-Sheet 4

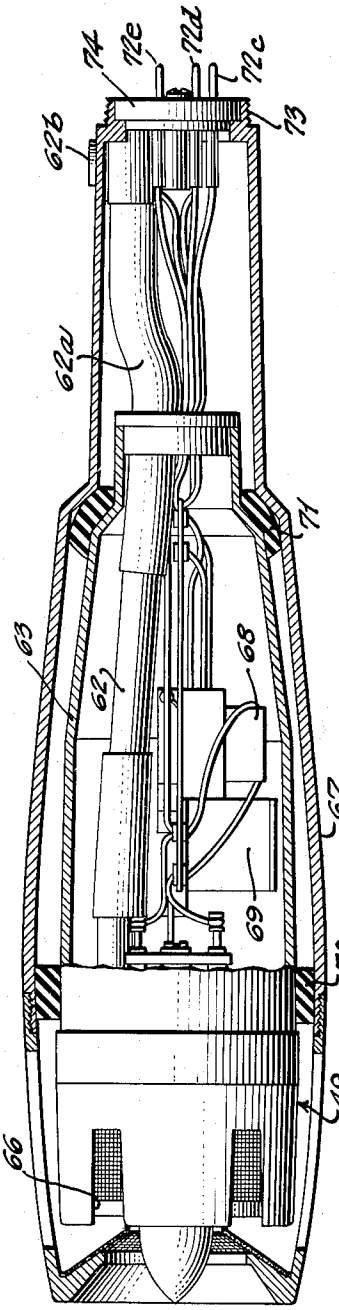

Fig. 19.

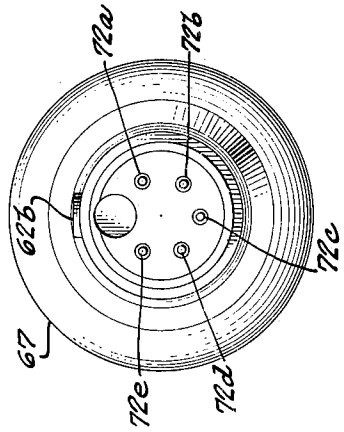

Fig. 20.

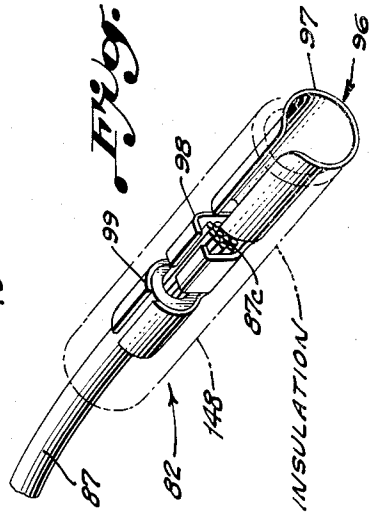

Fig. 12.

INVENTORS
SIDNEY E. LEVY
BERNARD C. SHARP

BY Alonzo S. Nelson
ATTORNEY

MODULAR COMPONENT ASSEMBLY OF MICROPHONES

Filed Sept. 12, 1961 7 Sheets-Sheet 5

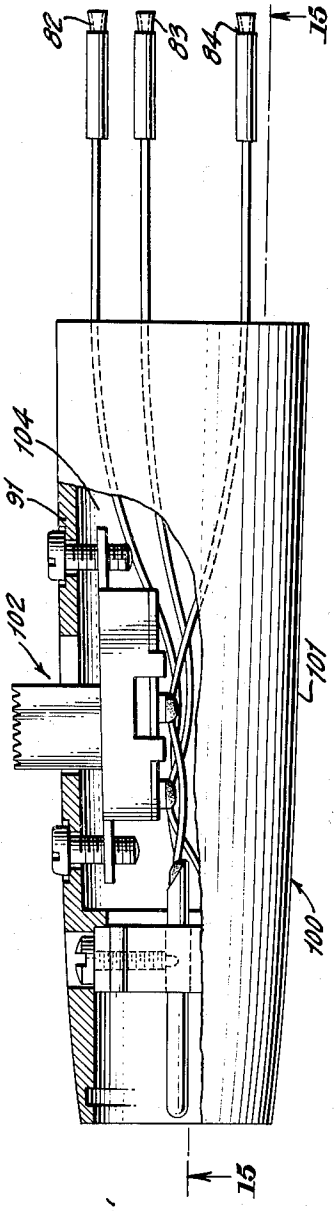

Fig. 13.

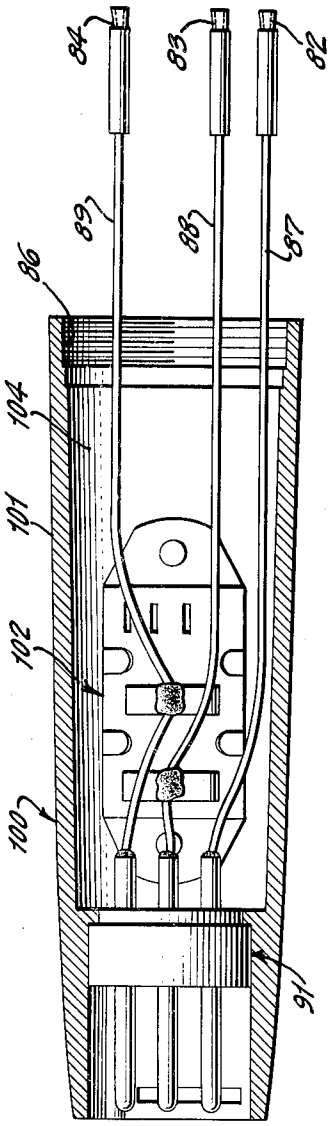

Fig. 15.

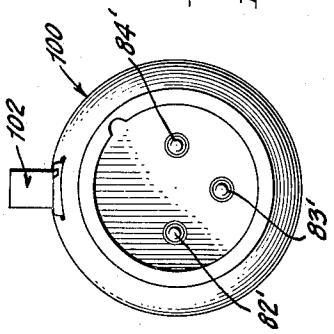

Fig. 14.

INVENTORS
SIDNEY E. LEVY
BERNARD C. SHARP
BY Almon S. Nelson
ATTORNEY

MODULAR COMPONENT ASSEMBLY OF MICROPHONES

Filed Sept. 12, 1961 7 Sheets-Sheet 6

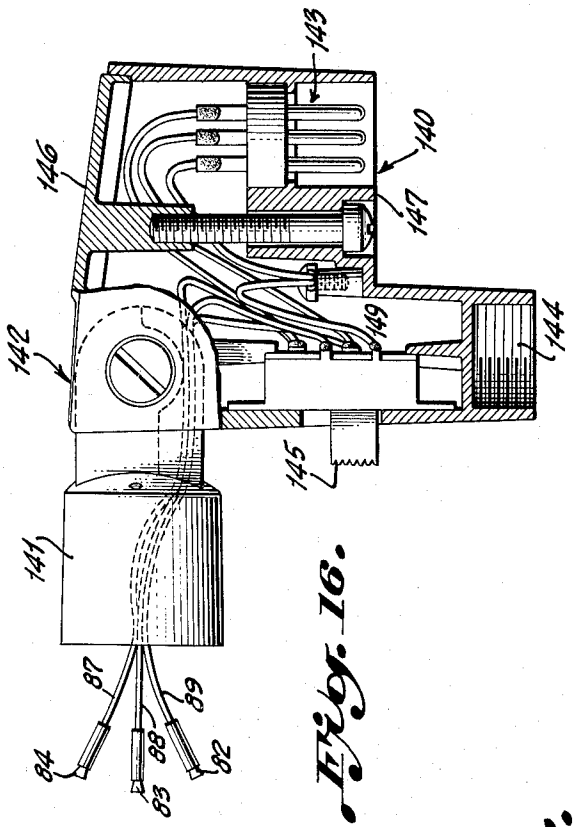

Fig. 16.

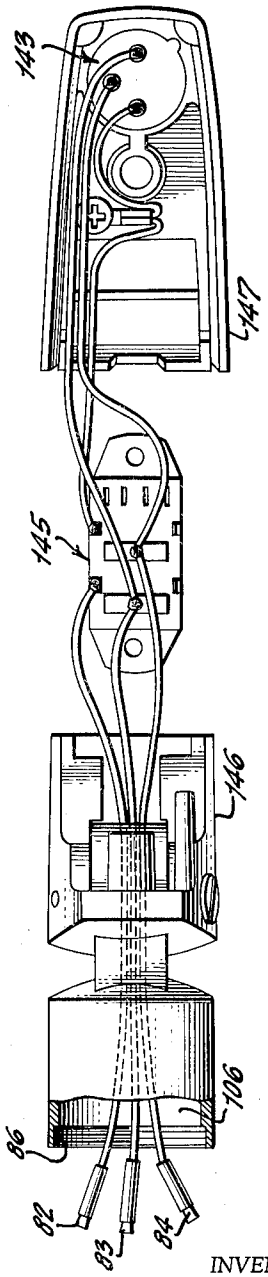

Fig. 17.

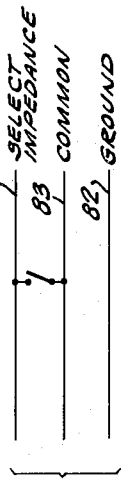

Fig. 18.

INVENTORS
SIDNEY E. LEVY
BERNARD C. SHARP
BY Wilmon S. Nelson
ATTORNEY

MODULAR COMPONENT ASSEMBLY OF MICROPHONES

Filed Sept. 12, 1961 7 Sheets-Sheet 7

Fig. 22.

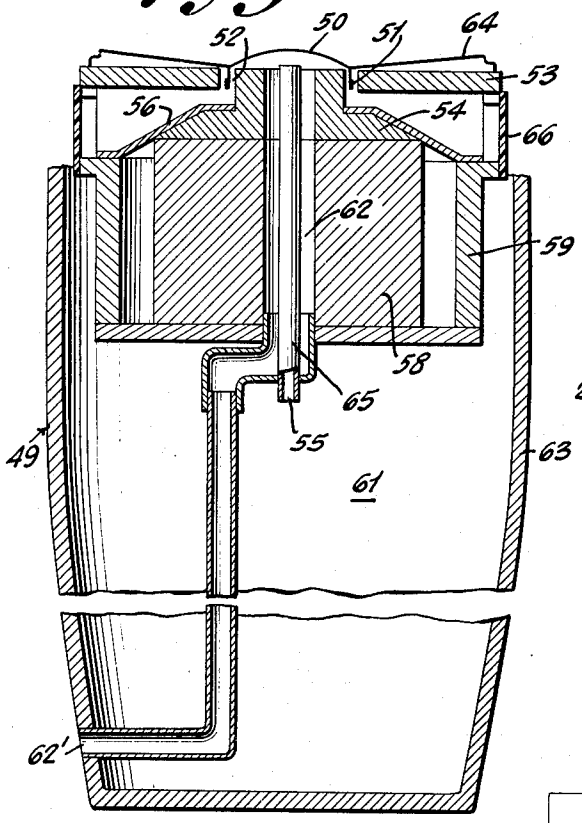

Fig. 24.

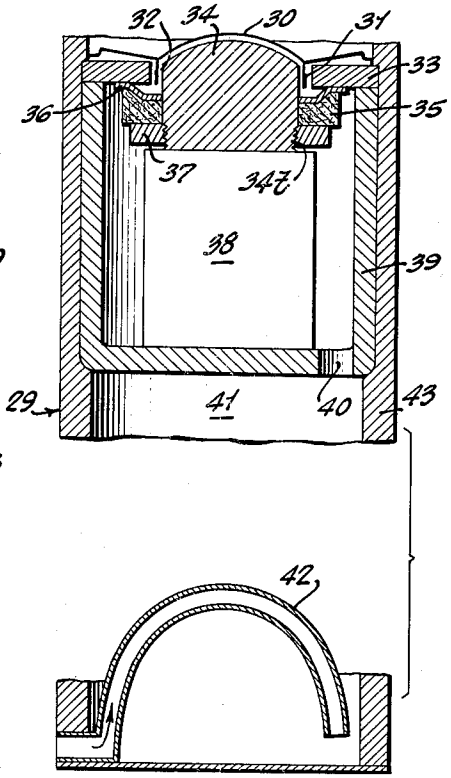

Fig. 25.

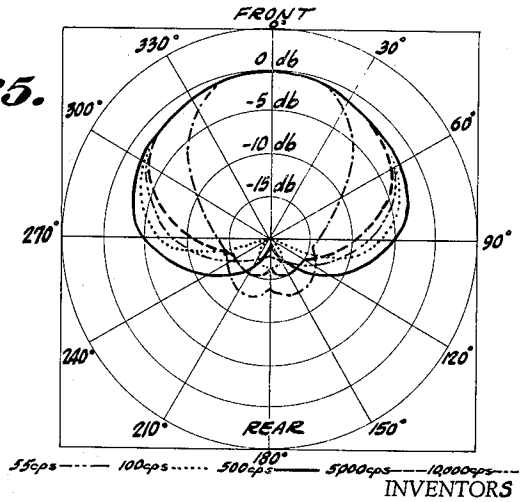

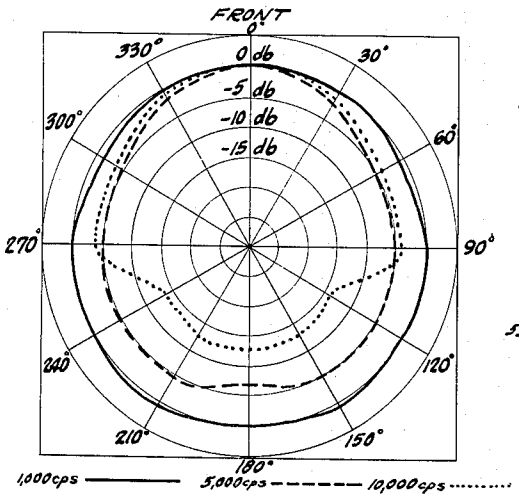

Fig. 23.

INVENTORS
SIDNEY E. LEVY
BERNARD C. SHARP

BY Almon S. Nelson
ATTORNEY

United States Patent Office

3,201,530

Patented Aug. 17, 1965

1

3,201,530
MODULAR COMPONENT ASSEMBLY OF MICROPHONES

Sidney E. Levy and Bernard C. Sharp, White Plains, N.Y., assignors, by mesne assignments, to Ling-Temco-Vought, Inc., Dallas, Tex., a corporation of Delaware

Filed Sept. 12, 1961, Ser. No. 137,571
18 Claims. (Cl. 179—146)

This invention relates to the assembly of a large number of different types of microphones from a limited number of microphone component parts. More particularly, it relates to providing a plurality of microphone heads having diverse characteristics, together with a plurality of electrical and mechanical adaptor units, any one of the former being adapted for assembly with any one of the latter in order to constitute a complete microphone assembly having specialized acoustic, electrical, and mechanical features especially adapted to a specific service requirement. This constitutes a modular microphone assembly.

The term microphone head is used to describe the acousto-electric transducer portion, including a capsule or transducer portion proper and other acoustic elements, such as chambers and ducts. The microphone head may also include a transformer for matching impedance, electrical compensating network elements uniquely adapted to the particular microphone head, and electrical connection terminals; and resilient mounting facilities may be provided for the capsule assembly within the microphone unit assembly.

The term adaptor unit is used to describe the electrical connection and mechanical mounting portion, having terminal connections for a cable, an optional on-off switch, and optional pivotal mounting facilities.

The term omnidirectional, as related to a pattern of sound pickup, is understood to mean substantially uniform pickup in all directions.

The term cardioid is understood to refer to a heart-shaped pattern having sensitivity varying only slightly around the front and having a region of minimal sensitivity on the rear.

The acoustical and structural features which must be provided in order to make a microphone suitable for application to a given service requirement include the following items:

Frequency response, generally desired to be flat over the audio frequency range;

Directional pattern of sound pickup, either omnidirectional or cardioid;

Flexibility of mounting, for suppression of floor vibration;

Enclosure of microphone within flexibly mounted casing, for suppression of noise due to touching of objects;

Output impedance, generally in the ranges of 30/50, 150/250, and 20,000 ohms;

Provision of on-off switch, either accessible or inaccessible to the user;

Type of mechanical support, either an integral swivel mounting, a slide-on stand adaptor, or a clip and cord for chest mounting; and

Type of cable connection, either permanent or quickly detachable.

Referring to the frequency characteristics, it is desirable to have the overall response flat, unless the presence of noise precludes the use of the entire audio band. In one application of this invention, a microphone is worn on the chest of a speaker, in which case the high frequencies in the voice are suppressed and low frequencies emphasized by the diffraction characteristics of the voice and of the body. In order to secure effective flat characteristics in this application, it is necessary to suppress low frequencies in the microphone and its associated circuits.

2

An omnidirectional pattern of sound pickup is secured from a pressure responsive device. These are well known in the art and are described, for example, in R. N. Marshall Patent No. 2,104,433, granted January 4, 1948, and in the various patents to E. C. Wente and A. L. Thuras, referred to therein. The structure of such devices generally utilizes a diaphragm energized on a first side by sound waves and enclosed on the second side by a system of acoustic chambers, except that a duct may lead from the second side to the outer atmosphere for enhancing low frequency response.

A cardioid pattern is secured from a device which is sensitive to certain relationships in the transmitted sound wave. Such devices are well known in the art and are described, for example, in B. Baumzweiger (B. B. Bauer) Patent No. 2,237,298. The structure of such devices generally utilizes a diaphragm energized on both sides, a first side being exposed to the oncoming sound in a certain plane, and the second side being exposed thereto through an acoustical resistance in a plane more remote from the source of sound than the first side. A vent may lead from the second side to the atmosphere at a position still more remote from the source than the plane at which the second side is exposed.

Microphones of each type are described generally by Alexis Badmaieff in the Journal of the Audio Engineering Society, vol. 9, No. 3, pp. 218–224 (July 1961). These do not have the features of this invention.

In order to satisfy the above selection requirements, it has heretofore been necessary to construct a great many entirely different, complete microphone assemblies. The present invention eliminates the necessity for sound studios or retailers to carry in stock a great many different microphone assemblies.

It is the principal object of this invention to provide a kit consisting essentially of an array of several microphone heads, five being shown, together with an array of several adaptor units, any one of the former being adapted to be affixed mechanically and to be connected electrically with one of the latter, in order to provide a large number of microphone assemblies having all of the acoustical and mechanical characteristics of the respective microphone and adaptor units.

It is another object of this invention to provide microphone assemblies having a wide diversity of acoustical and mechanical characteristics by the use of a relatively small number of components.

Further objects and advantages of the invention will be apparent from the following description taken in conjunction with the accompanying drawings, wherein:

FIG. 1 is a perspective view of a typical cardioid microphone head having an internal capsule flexibly suspended from the casing thereof;

FIG. 2 is a perspective view of a cardioid microphone head having the capsule rigidly affixed to the casing thereof;

FIG. 3 is a perspective view, with parts broken away, of a typical omnidirectional microphone head having a capsule flexibly suspended from the casing;

FIG. 4 is a perspective view of an omnidirectional microphone head having the capsule rigidly affixed to the outer casing, drawn to larger scale than FIG. 3;

FIG. 5 is a perspective view of an omnidirectional microphone head and adaptor having the capsule rigidly affixed to the casing and having less internal volume than the microphone head of FIG. 4;

FIG. 6 is a perspective view of an adaptor unit having exposable terminal connectors and adapted to be affixed

to any one of the microphone heads shown in FIGS. 1 to 5;

FIG. 7 is a perspective view of an adaptor unit having exposable terminal connectors together with a switch and adapted to be used alternatively with the adaptor unit of FIG. 6;

FIG. 8 is a perspective view of an adaptor unit for connection to a pipe stand, the unit having exposable terminal connectors and a swivel joint, and adapted to be affixed to any one of the microphone heads shown in FIGS. 1 to 5;

FIG. 9 is a perspective view of a slide-on mechanical mounting for connection to a pipe stand, this mounting having a swivel joint and adapted to be used with the combination of any one of the microphone heads of FIGS. 1 to 5 when affixed to either of the adaptor units of FIGS. 6 and 7;

FIG. 10 is a side elevation of a cable connector having connected therein a portion of cable, this connector being adapted to be affixed to any one of the adaptors shown in FIGS. 6, 7, and 8 for completing the connection between one of said adaptors and an amplifier;

FIG. 11 is a perspective view of an adaptor unit having exposable terminal connectors and an integrally connected cable, this unit being adapted to be affixed to any one of the microphone heads shown in FIGS. 1 to 5;

FIG. 12 is a perspective view, with parts broken away, of a terminal connector or clip as shown on the wires extending from the upper portions of FIGS. 6, 7, 8, and 11;

FIG. 13 is a side elevation of the adaptor shown in FIG. 7, and having a portion cut away to illustrate the wiring and the exposable terminal connectors;

FIG. 14 is an end elevation of the left end of the adaptor shown in FIG. 13;

FIG. 15 is a cross-section taken on the line **15—15** of FIG. 13;

FIG. 16 is a partial vertical section of the adaptor shown in FIG. 8;

FIG. 17 is an exploded view of the adaptor shown in FIG. 16, illustrating the wiring;

FIG. 18 is a schematic wiring diagram of either one of the adaptors shown in FIGS. 7 and 8;

FIG. 19 is a cross-sectional view of the cardioid microphone unit assembly shown in FIG. 1, showing the flexible suspension of the capsule;

FIG. 20 is an end view of the capsule assembly shown in FIG. 19;

FIG. 21 is a perspective view of one complete operating assembly of a microphone head as shown in one of FIGS. 1 to 5, together with an adaptor as shown in FIG. 8, a cable connector, and a portion of pipe stand;

FIG. 22 is a cross-sectional view of a cardioid capsule as used in the microphone heads of FIGS. 1 and 2;

FIG. 23 is a polar pattern of an omnidirectional microphone utilizing a capsule substantially as shown in FIG. 24;

FIG. 24 is a cross-sectional view of an omnidirectional capsule as used in the microphone head of FIGS. 3 and 4;

FIG. 25 is a polar pattern of a cardioid microphone utilizing a capsule substantially as shown in FIG. 22; and,

FIG. 26 is a perspecive view of a clip and cord adapted to be snapped on to either the microphone shown in FIG. 4 or that shown in FIG. 5.

Modular microphone heads

Any one of various microphone heads may be assembled with any one of the various adaptor units to constitute a complete microphone assembly adapted to specific service requirements, according to the principles of this invention.

The various microphone heads will be described in order to show how different acoustical characteristics are secured.

The simplest microphone head **79**, shown in FIG. 5 connected to an adaptor unit **80***s*, utilizes a rigidly mounted, pressure-sensitive capsule **29**, which is shown in cross-section in FIG. 24. It consists essentially of the diaphragm **30** fastened to the voice coil **31**; the latter is immersed in a magnetic air gap **32** formed between the pole plate **33** and the inner magnetic core **34**. A felt damper **35** is retained between a centering washer **36** and a damper adjusting ring **37**, the inner diameter of which is threaded and engages a threaded portion **34***t* of the pole piece **34**. The flux path is completed by the magnet **38** and the magnetic return yoke **39**. The movement of the diaphragm and the shape of the frequency characteristic is controlled by setting the compression of the felt damper **35** by the adjusting ring **37**. Air vibrations are transmitted inside of the yoke **39** through a vent **40** to the acoustic chamber **41**. The inner casing or wall **43** of the capsule assembly **29** is also the wall of the outer casing, resulting in the smallest possible microphone head assembly.

Low frequency response is controlled by the size selected for the chamber **41** and by the use or non-use of a duct **42** communicating with the external atmosphere. For instance, the microphone head **79** shown in FIG. 5 has an identical capsule **29** but utilizes an acoustic chamber **41** much smaller than is utilized in the microphone head **77**, shown in FIG. 3, and uses no duct, whereas a duct **42** is used in the head **77** of FIG. 3. This results in a roll-off of low frequencies in the microphone head **79**, which is desirable for applications where it is worn on the chest or for speech communication in noisy or reverberant rooms. Conversely, the microphone head **77** has a flat frequency characteristic.

The polar pattern of any microphone head made with the capsule **29** enclosed acoustically in the rear thereof, as described above, is shown in FIG. 23. It may be seen that it has uniform sensitivity in all directions at midrange frequencies and is only slightly preferential to high frequencies at the front. This polar characteristic is referred to as omnidirectional.

A different capsule **49**, the use of which results in the cardioid pattern of FIG. 25, is shown in FIG. 22. A diaphragm **50** is attached to a voice coil **51** in a similar manner, except that the diaphragm must be much more flexibly suspended and is generally fitted with a surround **64**, having a large diameter than the surround of FIG. 24, making the entire capsule relatively larger in diameter. The magnetic system is similar to that of the pressure-sensitive capsule **29**, having a magnetic air gap **52** between the pole plate **53** and the pole piece **54**. In place of the felt damper **35** there is an acoustic duct **65** containing damping material **55**. The washer **56** retains the pole piece **54** in a central position. The magnetic path is completed through the magnet **58** and the magnet return yoke **59**. An acoustic duct **62** communicates between the air immediately below the diaphragm **50**, through the magnet and through the acoustic chamber **61** to the external atmosphere at **62′**. The axial distance between the diaphragm and this opening **62′** determines the cancellation of sound approaching from the rear of the microphone. There are also acoustic ducts **66** containing acoustical resistance material distributed around the capsule disposed a short axial distance behind the diaphragm **50**, which determine the cancellation of midrange and high frequency sound waves approaching the microphone from the rear, as described in the Baumzweiger patent. The smallest cardioid microphone head **76** constructed according to the principles of this invention, shown in FIG. 2, utilizes the wall **63** of the capsule assembly as the casing **63***c* of the microphone.

In the embodiment of FIG. 1 of this invention, shown in cross-section in FIG. 19, the microphone head **75** comprised of the capsule **49** and acoustic elements enclosed by the wall **63**, is flexibly suspended within an outer casing **67** by the compliant pads **70** and **71**. The

acoustic duct 62 is extended to the outer casing 67 by the compliant tube 62*a* and communicates to the outer atmosphere at 62*b*. The function of such a flexible suspension 70–71 is to reduce the effect of vibrations in the outer casing 67, due to such causes as handling of the casing or building vibrations transmitted through a stand to the casing, as is well known in the art. Similarly, the inner casing 43 of microphone head 77 is suspended in compliant pads 44, 45, and 45'.

The output of the capsule 49 is coupled to the output terminal pins 72*a*, 72*b*, 72*c*, 72*d*, and 72*e*, shown in FIGS. 19 and 20, through the tapped transformer 68, different pins corresponding to different values of output impedance. Once the impedance has been set for a given installation, there must be no control accessible to the user by which it could be altered accidentally. Electrical circuit means 69 may be used for correcting the overall frequency characteristics, if desired, as for reducing an undesired peak or the like.

Electrical connections are made to terminals 72 on all of the microphone heads 75, 76, 77, 78, and 79 in the same manner as described above.

The end of each microphone head 75–79 has a threaded portion 73 adapted to engage a mating portion 86 on each adaptor unit, as hereinafter described. In the portion 73 a terminal panel 74 is mounted.

It has been shown that several different acoustically distinctive microphone heads 75 to 79 are constructed from two acoustically different microphone capsules 29 and 49, the former having an omnidirectional pattern and the latter having a cardioid pattern, and that the electrical output impedance may be selected by means of taps on a transformer which is connected to respective terminal pins.

Each of the microphone heads 75–79 is thus incomplete and cannot be used as a microphone assembly without completing the connections of said terminal pins and selecting thereby a value of output impedance suited to the specific application; it is also necessary to support the assembly mechanically, and in certain cases an on-off switch must be provided.

Any one of these microphone heads 75–79 may be completed and accessory features provided by affixing it to the appropriate one of the adaptor units to be described hereinafter.

Modular Adaptor Units

The adaptor 80 shown in FIG. 11 consists essentially of a casing 81; a plurality of terminal receptacles 82, 83, and 84 affixed to terminal conductors 87, 88, and 89, respectively; a hollow space 103 within the casing at the terminal end thereof within which the terminal conductors are nested after assembly of the adaptor 80 to a microphone head, such as those of FIGS. 1 to 5; a thread portion 86 adapted to engage a mating portion 73 on any microphone head; and an internally mounted cable 85, which may have any length. The threaded portions 86 surround a window opening.

An illustrative terminal receptacle 82 is shown in FIG. 12. It consists essentially of a metal clip 96 having a frontal hollow split portion 97, a portion 98 conductively contacting the wire 87*c*, and a strain-relief portion 99 for retaining the conductor 87 mechanically. The inner diameter of the hollow portion is such as to grip any one of the terminal pins 72 for good electrical contact. Each lip 96 is insulated against accidental contact with other clips or a casing by an insulating sleeve 148.

It is common practice to use one terminal for grounding to the casing, one terminal for common, and a third for the selected impedance connection, such as 50, 200, or 20,000 ohms. In the adaptor 80 constructed according to the principles of this invention, the end of the casing 81 has a female threaded portion 86, which is adapted to be screwed on a male threaded portion 73 of each microphone unit.

The adaptor, generally indicated by the reference numeral 90, shown in FIG. 6, is similar to adaptor 80 except that a receptacle 92, forming a window opening, is provided for making connection with a standard cable connector 93, as indicated in FIG. 10. This provides the feature of being able to quickly disconnect the cable, which is highly desirable under some service conditions and may be undesirable in others. It may be noted that no on-off switch is used in this adaptor 90, which is the desired condition for such use as that involving audience participation, where accidental changing of the switch position would disrupt a program.

The adaptor 100, shown in FIG. 7, is similar to adaptor 90 except that an on-off switch 102 is provided, the wiring diagram of which is shown in FIG. 18. Further details are shown in the cross-sectional views, FIGS. 13 and 15, and the end view, FIG. 14, including the hollow space 104 in which the terminal conductors 87, 88, and 89 nest after the adaptor 100 is assembled to a microphone head such as shown in FIGS. 1 to 5.

When any one of the adaptors 80, 90, or 100 is used, the assembly of microphone head and adaptor becomes capable of being supported mechanically in devices such as the slide-on holder 110, shown in FIG. 9, having a swivel mounting 121 for attachment to a pipe stand (not shown), or the fastener 120 of FIG. 26 adapted to attach a cord 122 for hanging on the chest. A novel feature of this invention is that the adaptors 80, 90, and 100 complete the electrical connections with any desired selection of impedance, completely enclose the connections for the purpose of electrically shielding them, provide a choice of switch, and provide an assembly which is suitable for mounting in different types of stand or fastener that provides a chest microphone.

There is a problem in proportioning the hollow space 104, in FIG. 15, or 106, in FIG. 17, in each adaptor in which the terminal receptacles 82–84 are nested, to make it sufficiently large to accommodate the requisite number of receptacles (normally three) and the terminal conductors 87–89, without causing the microphone assembly as a whole to become unwieldably large. In a preferred embodiment of this invention, the terminal receptacles, such as the one shown in FIG. 12, assembled with the conductors and surrounded by insulating sleeves such as 148, are approximately 0.135 diameter and ⅝ inch long; and the space 104 is ¾ inch diameter and 1⅛ inch long. Thus, the cubic volume of the space 104 is approximately twenty times as large as the total occluded volume of the terminal receptacle 82–84; the space occluded by the terminal conductors per se is relatively small because of their relatively small diameter. The space 106 in casing 141 has an inner diameter of 0.8 inch and the distance from the outer edge to the inner shoulder is 0.8 inch. Conductors 87–89 nest freely in a recess 149 of the swivel portion 142, as shown in FIG. 16. Thus, in each embodiment, the cable is not crowded while the head is being screwed to the adaptor.

The functions of several of the above adaptors may alternatively be combined in one assembly, according to the principles of this invention. For instance, the adaptor 140, shown in FIGS. 8, 16, 17, and 21, provides all of the functions of adaptors 80, 90, and 100. The preferred value of impedance is selected by use of the terminal receptacles 82, 83, and 84; the space 106, see FIG. 17, is provided in which the terminal conductors nest after assembly of the adaptor 140 to a microphone head, such as those in FIGS. 1 to 5, according to the principles of this invention; a switch 145 is provided, although alternatively an adaptor can be assembled identical to adaptor 140, except for omitting the switch; a swivel joint 142 permits adjustment of the microphone angular position; a receptacle 143 is adapted to receive a cable connector, such as 93 of FIG. 11; and a threaded portion 144 is adapted for screw attachment to a pipe stand.

It has been shown that a great many different microphone assemblies can be assembled from a relatively small number of microphone heads and adaptor units, covering the range of requirements such as frequency response, directional pattern, flexible suspension; impedance selection, type of cable connection, swivel mechanical mounting, and the like. This is of great importance within a sound studio, and it is of great economic importance at sales distribution depots, where it effects a major economy in avoiding the necessity for carrying an inventory consisting of a large number of different microphone assemblies.

It will be obvious to those skilled in the art that various changes may be made in the invention without departing from the spirit and scope thereof and, therefore, the invention is not limited by that which is shown in the drawings and described in the specification, but only as indicated in the appended claims.

We claim:

1. A set of microphone assembly components, comprising at least two acoustically distinctively different microphone heads, at least two electro-mechanically different adaptor units, and at least one cable, said adaptor units mechanically and selectively interconnecting either microphone head to a cable to complete electrical connections therebetween, and electrical means contained within at least one member of the set of microphone heads and at least one member of the set of adaptor units for adjusting the output impedance.

2. A set of microphone assembly components, comprising at least two acoustically different microphone heads, at least two different adaptor units, and at least one cable, said adaptor units mechanically and selectively interconnecting either microphone head to a cable to complete the electrical connections therebetween, at least one of said adaptor units having integral means for supporting the assembly of microphone head, adaptor, and cable.

3. An electro-mechanical adaptor unit for use with a microphone head having a base end and terminals disposed therein corresponding to at least two values of output impedance, comprising a casing having a generally hollow portion affixed to the base end of the microphone head, a cable anchoring portion permanently affixed in the casing, and a plurality of terminal members adapted to be nested within said hollow portion and adapted to contact terminals of the microphone head corresponding to any one selected value of output impedance, the hollow portion having a volume at least ten times as great as the total volume occluded by the terminal members whereby the terminal members may be connected to the microphone head terminals when the adaptor unit is separated from the microphone head and the two units affixed together thereafter without disturbing the cable anchoring portion.

4. An adaptor unit as described in claim 3, wherein the terminal members nested within the adaptor unit are each comprised of a conductive hollow split contacting portion, insulating sleeve means thereover, and insulated electrical conductors affixed thereto.

5. The combination of a set of microphone heads and a set of adaptors, the heads including an omnidirectional capsule and a cardioid capsule and the adaptors including one having a fixed mounting and one having a swivel mounting; each head and each adaptor having casings containing window openings complementary therebetween and means for affixing a head to an adaptor, whereby to constitute a microphone assembly; each microphone head containing a terminal panel having terminals mounted for accessibility through the window, an impedance matching transformer having taps for different impedance connections and having the taps connected to the terminals; each adapter having a cable mounted therein and having a set of terminal conductors connected to the cable and each conductor having a terminal receptacle at the end thereof adapted to connect to selected terminals, whereby to select a desired impedance.

6. The combination as described in claim 5, characterized by a microphone head comprising an inner casing and an outer casing, the inner casing containing the capsule and transformer and the outer casing containing the terminal panel and window, and compliant means for suspending the inner casing within the outer casing.

7. The combination as described in claim 5, wherein the adaptor is provided with a switch.

8. The combination of a set of microphone heads having at least one omnidirectional and at least one cardioid capsule and a set of adaptors having at least one fixed and one swivel mounting means; each head and each adaptor having complementary window openings and means for affixing a microphone head to an adaptor around a window; impedance selecting transformers and terminal panels therefor associated with a window, and connector means associated with each terminal panel, whereby to select a desired impedance connection; a cable, and means for connecting said connector means to the cable.

9. A set of microphone heads and adaptors comprising a head containing an omnidirectional capsule in a first casing, a head containing a cardioid capsule in a second casing, each having a terminal panel mounted within a window in the casing; an adaptor in a third casing having a window adapted for juxtaposition to a window in a head casing; means for affixing a head to an adaptor around a window, whereby to constitute a microphone assembly containing a terminal panel; impedance selecting transformers contained within each microphone assembly having connections for different impedances to the terminal panels and means for connecting to the terminal panel, whereby to select a desired impedance.

10. The combination of a set of microphone heads and a set of adaptors, the heads comprising an omnidirectional capsule and a cardioid capsule and the adaptors comprising one having a fixed mounting and one having a swivel mounting; each head and each adaptor having casings containing window openings complementary therebetween, and means for affixing a head to an adaptor around a window whereby to constitute a microphone assembly; each microphone assembly containing a terminal panel mounted for accessibility through the window, an impedance matching transformer having taps for different impedance connections connected to the panel, and means for connecting to selected taps for selecting a desired impedance.

11. An electro-mechanical adaptor unit for use with a microphone head having a base end and terminals disposed therein corresponding to at least two values of output impedance, comprising a first casing portion having a generally hollow portion adapted to be affixed to the base end of the microphone head and a mechanical swivel portion; a second casing portion having a swivel portion adapted for mating with the first swivel portion, a cable anchoring portion permanently affixed in the casing; a threaded portion adapted for attachment to a pipe stand; and a plurality of terminal members adapted to be nested within the hollow portion of the first casing portion and adapted to contact terminals of the microphone head corresponding to any selected value of output impedance.

12. A set of microphone assembly components, comprising an omnidirectional microphone capsule; a cardioid microphone capsule; terminal panels associated with each capsule; transformers associated with each capsule having one winding connected to a capsule and taps on a winding connected to the associated terminal panel whereby to provide terminal connections for more than one output impedance; a casing for each capsule, the associated transformer and terminal panel, having acoustical elements suited to the capsule, having a window in which the terminal panel is mounted and having mechanical means associated with the window for affixing a cover;

and at least one adaptor unit comprising a set of connectors adapted to connect to selected terminals on a panel whereby to select a desired output impedance; means for connecting said connectors to a common cable; and a casing for the set of connectors and cable connecting means having mechanical means complementary to the mechanical means on each microphone capsule casing for affixing it to the capsule casing and thereby constituting a cover for the terminal panel.

13. An electro-mechanical adaptor unit for use with a microphone head having a base end with terminals disposed therein corresponding to at least two values of output impedance, comprising a casing having a generally hollow portion adapted to be affixed to the base end of the microphone head; a cable permanently affixed in the casing; and a plurality of terminal members adapted to be nested within said hollow portion and adapted to contact terminals in the microphone head corresponding to any one selected value of output impedance; whereby the terminal members may be connected to the microphone head terminals corresponding to a desired impedance when the adaptor unit is separated from the microphone head and the two units affixed together thereafter without disturbing the cable.

14. An adaptor unit as described in claim **13**, wherein the terminal members nested within the adaptor unit are each comprised of a conductive hollow split contacting portion, insulating sleeve means thereover, and insulated electrical conductors affixed thereto.

15. The combination of a set of microphone heads and a set of adaptors, the heads including flexibly suspended omnidirectional and cardioid capsules, each head and each adaptor having casings containing window openings complementary therebetween and means for affixing a head to an adaptor whereby to constitute a microphone assembly; each microphone head containing a terminal panel having terminals mounted for accessibility through the window, an impedance matching transformer having taps for different impedance connections and having taps connected to the terminals; each adaptor having a cable

mounted therein and having a set of terminal conductors connected to the cable and each conductor having a terminal receptacle at the end thereof connected to selected terminals of the terminal panel whereby to select impedance.

16. In combination, pairs of microphones and adaptor elements, a cable permanently mounted in each adaptor, each microphone and each adaptor having casings with complementary window openings adapted for juxtaposition of the windows and means for affixing an adaptor to a head around a window; one element of each pair containing an impedance matching transformer having taps for different impedance connections and a connection panel having terminals disposed for accessibility through a window connected to the transformer taps; the element of each pair complementary to that containing the transformer having a set of terminal conductors attached to selected terminals of the connection panel whereby to select a value of impedance by disengaging the adaptor from the head around the window.

17. The combination as described in claim **16**, characterized by at least one microphone head element casing containing an omnidirectional capsule and at least one containing a cardioid capsule.

18. The combination as described in claim **16**, characterized by at least one microphone head element having an inner and an outer casing and compliant means for suspending the inner casing within the outer casing, the outer casing having the window opening described.

References Cited by the Examiner

Allied Radio Catalog No. 200 (1961), page 345.

Badmaieff: Use of Polyester Films in Microphone Designs, Audio, June 1960, pages 28–30, 32, 35 and 60.

Knight: New Products, Audio, July 1960, page 50.

ROBERT H. ROSE, *Primary Examiner.*

THOMAS HABECKER, *Examiner.*