July 27, 1965 J. C. ANTHONY 3,196,469

AUTOMATIC BUOY LINE ADJUSTMENT MECHANISM

Filed Jan. 29, 1964 3 Sheets-Sheet 1

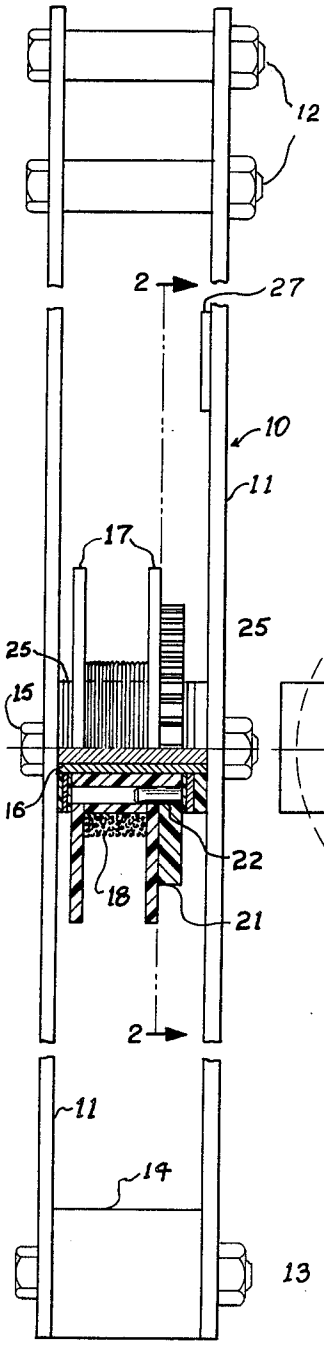

FIG. 1

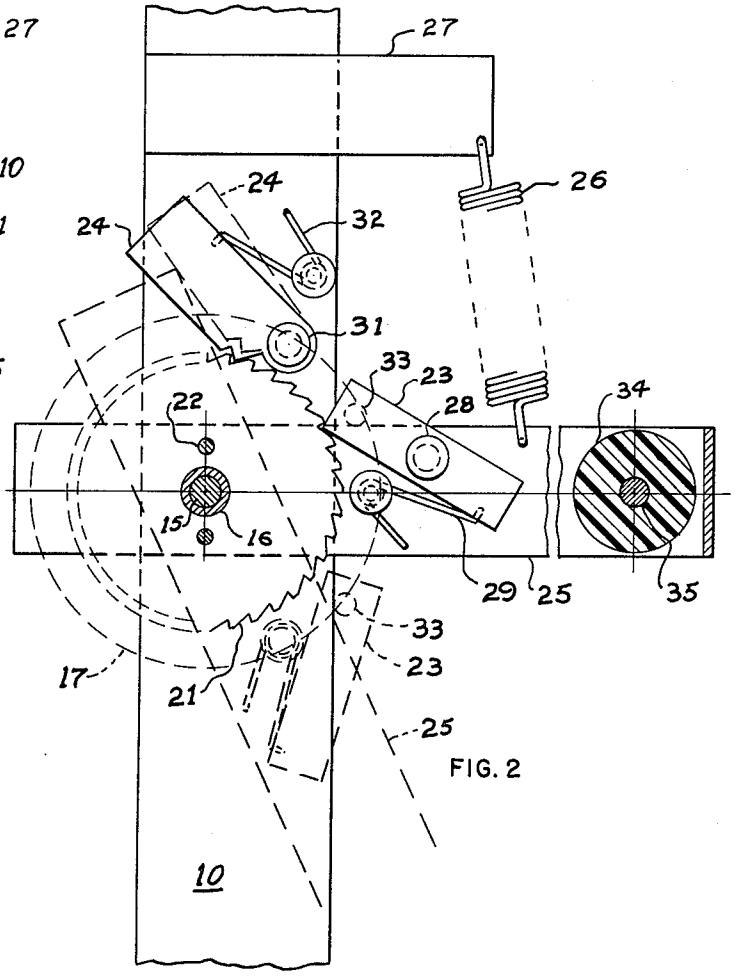

FIG. 2

INVENTOR.
Joseph C. Anthony

BY Robert N. Carter

ATTORNEYS

AUTOMATIC BUOY LINE ADJUSTMENT MECHANISM

Filed Jan. 29, 1964 3 Sheets-Sheet 2

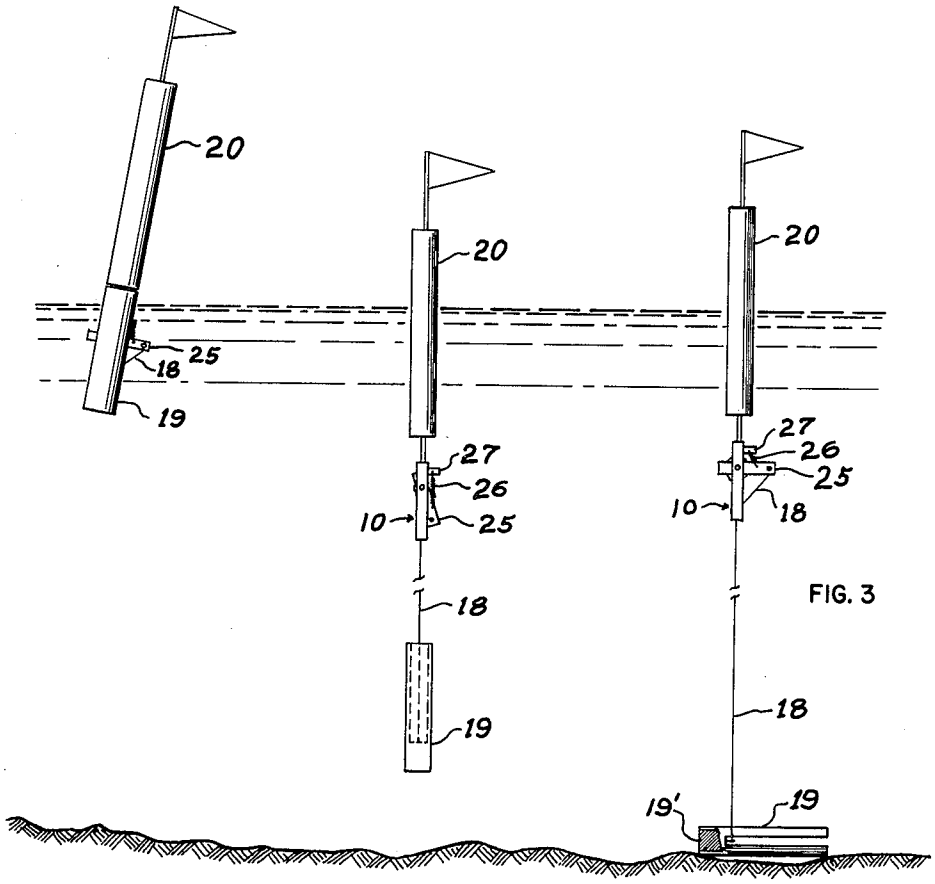

FIG. 3

INVENTOR.
Joseph C. Anthony
BY Robert N. Carter
ATTORNEYS

AUTOMATIC BUOY LINE ADJUSTMENT MECHANISM

Filed Jan. 29, 1964 3 Sheets-Sheet 3

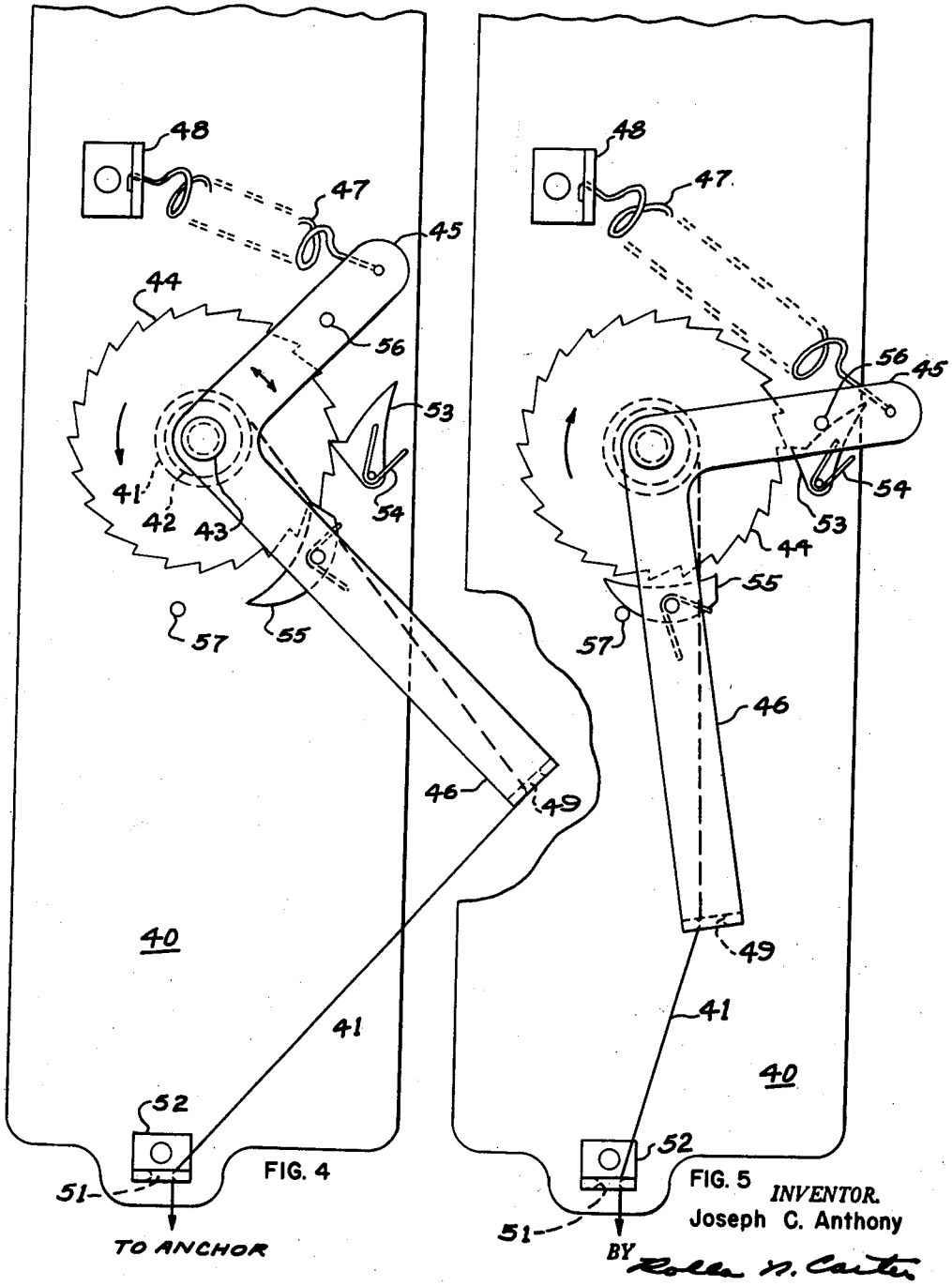

INVENTOR.
Joseph C. Anthony
BY Rollin N. Carter
ATTORNEYS

United States Patent Office

3,196,469

Patented July 27, 1965

1

3,196,469
AUTOMATIC BUOY LINE ADJUSTMENT MECHANISM

Joseph C. Anthony, 1004 E. 2nd Plaza, Panama City, Fla.

Filed Jan. 29, 1964, Ser. No. 341,147
4 Claims. (Cl. 9—8)
(Granted under Title 35, U.S. Code (1952), sec. 266)

The invention described herein may be manufactured and used by or for the Government of the United States of America for governmental purposes without the payment of any royalties thereon or therefor.

The present invention relates to mooring devices for buoys and more particularly to a mooring line adjusting mechanism which will reel in and pay out the mooring line of a buoy to compensate for long term depth variations such as tidal changes.

Present methods for planting marking buoys in waters of different depths involve pre-cut mooring lines with their lengths carefully marked and arranged with buoys on the fantail of the laying ship. Under the best of conditions, however, some of the buoys are pulled beneath the surface when planted in deep holes or drift too far from the desired position when the anchor lands in shallower water than anticipated. Tidal changes also affect the buoys, either pulling them under at high tide or causing a slack moor at low tide thereby failing as precise navigation aids.

An object of the invention is to provide a mooring device which will automatically pay out the proper scope of mooring line when a buoy is planted.

Another object of the invention is the provision of a mooring device which will maintain a substantially constant short scope mooring during tidal changes and without submerging the buoy during periods of flood tide.

A further object of the invention is the provision in a mooring device of means for utilizing wave action for maintaining tension on a mooring line within predetermined limits.

Other objects, as well as advantages, of the invention will be apparent from the following description when read in connection with the accompanying drawings in which:

FIG. 1 is a side view partly in section and with pawls omitted of a reel carrying device according to the invention;

FIG. 2 is a side view taken on line 2—2 of FIG. 1 and showing the reel adjusting mechanism;

FIG. 3 is a diagrammatic view showing successive stages of a launched buoy;

FIG. 4 is an elevation view illustrating the reel-in action of a ratchet coupling; and

FIG. 5 shows the ratchet coupling of FIG. 4 in the position of free spooling of the reel.

In accordance with a preferred embodiment of the present invention the reel on which is wound a length of mooring cable connecting a float member to an anchor is provided with a ratchet wheel having associated holding and driving pawls operative to rotate the reel to wind on cable by the reciprocating motion of a spring loaded lever which is periodically moved against the spring load by relatively small increases in the tension of the mooring cable caused by wave action and moved by the spring load to communicate motion to the wheel when the tension in cable decreases after the passage of a wave. Relatively large tension in the cable, such as produced by the anchor descending to the bottom when the buoy is planted and as produced by a rising tide, functions through the reciprocating lever to release both pawls which permits the reel to free spool until enough cable is paid out to reduce

2

the cable tension to a value where the pawls are free to engage the ratchet wheel.

A preferred embodiment of the invention shown in FIGS. 1 and 2 includes a yoke **10** comprising two flat frame members **11** held in spaced relation at their upper ends by bolts **12** which also serve to secure the yoke **10** to a float member **20** (FIG. 3) and at their lower ends by a bolt **13** the spacer portion **14** of which is preferably made of a low friction material such as polytetrachloroethylene (Teflon) to function as a sheave as described below. Intermediate the ends of the yoke **10** a bolt **15** provided with a spacer sleeve **16** rotatably supports a flanged reel **17** on which is wound a mooring cable **18** the free end of which is secured to an anchor member **19** (FIG. 3). A ratchet wheel **21** secured to one of the flanges of the reel **17** as by pins **22** has two cooperating pawls **23** and **24** for enabling reel rotation movement to be effected in one direction with slip or freedom in the opposite direction. A U-shaped lever member **25** with its open end spanning the reel-ratchet wheel assembly **17**, **21** is rockably supported on the sleeve **16** so that its rocking axis coincides with the axis of the ratchet wheel **21**. A spring **26** anchored in a bracket **27** secured to one of the frame member **11** and in the lever **25** yieldingly urges the lever **25** in a direction to rotate reel **17** in the wind-up direction through the pawl **23** which is mounted for pivotal movement on a stud **28** carried by the lever **25** and biased by a spring **29** toward engagement with the ratchet wheel **21**. The pawl **24** pivotally mounted on a stud **31** provided on the frame **11** and pressed against the ratchet wheel **21** by a spring **32** normally prevents backward, i.e., unwinding, motion of the ratchet wheel **21**. Movement of the lever **25**, as described below, to the position shown in broken lines in FIG. 2 functions to disengage the pawls **23** and **24** from the ratchet wheel **21** by moving them to the positions indicated by broken lines in FIG. 2, the pawl **23** being disengaged by an integral pin **33** contacting the frame **11** and the pawl **24** being disengaged by the end of the lever **25**. Adjacent to the closed end of the U-shaped lever **25** a sheave **34** carried on a bolt **35** is provided for guiding the cable or line **18** through an angular path from the reel **17** and over the sheave **14**. As will be described in connection with FIGS. 4 and 5 this angular path of the line **18** and the lever **25** comprise a tension responsive means.

The planting of the above described buoy will now be described in connection with FIG. 3 which illustrates from left to right successive stages in buoy planting. In the first stage, the spar buoy **20** with its anchor **19** telescoped over the reel carrying yoke **10** has just been launched into the water. In the second stage, the weight of the anchor **19** in descending to the bottom places the line or cable **18** under sufficient tension to move the lever **25** against the force of the spring **26** to the position shown in broken lines in FIG. 2 which operates to disengage both the driving pawl **23** and the holding pawl **24** so that the reel **17** free-spools during the entire time the anchor **19** is descending. In the third stage, the anchor **19** which preferably has a concentrated weighted portion **19'** rests on the bottom with the tension on the line **18** small enough so that the lever **25** has left its extreme position and the holding pawl **24** engages the ratchet wheel **21** to prevent any more line **18** from being dispensed until such time sufficient tension is again placed on the line **18**, as by a rising tide to cause the unwinding of additional line. When the tide recedes accompanied by wave action the buoyant force of a rising wave exerted on the float member **20** depresses the lever **25** through a small angle accompanied by the pawl **23** which clicks freely. When the wave passes, tension due to buoyancy decreases and the spring **26** returns the lever **25** to its original position and

this return movement is communicated to the reel **17** through the ratchet wheel **21** and the pawl **23**. In this manner the desired short-scope mooring is maintained throughout tidal changes.

The proportioning of the several parts of the buoy assembly is non-critical over wide ranges. However, certain features found to be desirable and satisfactory may be mentioned. Expendable buoys such as might be utilized in narrow-path mine countermeasures operations may employ long foamed plastic cylinders for the buoyant member **20**, and the yoke assembly **10** is preferably weighted or made of metal so that when attached to the lower end of the member **20** it acts as a counterweight to make the buoy float as a spar about one-third to one-half submerged. The concentrated weight **19'** is preferably of lead so as to give the anchor **19** a weight-in-water of about 15 pounds. The spring **26** and lever **25** are made to actuate the ratchet wheel **21** when the wave action produces a tension of one pound on the line **18** and to permit free spooling of the reel **17** in response to a line tension of five pounds.

The operation of a tension responsive means in accordance with the invention will now be described in connection with the embodiment illustrated in FIGS. 4 and 5. As here shown a support base **40** to be connected to the lower end of the buoyant member of a buoy is provided with a coil of line or mooring cable **41** to be wound and unwound on a core **42** in the counterclockwise and clockwise direction, respectively. The core **42** is rotatably mounted on a stud bearing **43** projecting from the base **40** and comprises the hub of a two flanged reel at least one flange **44** of which constitutes a ratchet wheel adapted to be driven in the counterclockwise direction, with slip or freedom in the clockwise direction. A bell crank having arms **45** and **46** is fulcrumed for oscillating motion about the stud bearing **43**, the arm **45** being biased in the counterclockwise direction by a spring **47** having its ends anchored respectively in the arm **45** and an upturned ear **48** suitably secured to the base **40**. The distal end of the crank arm **46** is provided with an eyelet **49** through which the line **41** is passed from the reel **42** and thereafter through a fixed eyelet **51** provided in a member **52** secured to the lower portion of base **40**. Tension on the line **41** of a magnitude to cause the spring **47** to yield rotates the crank arms **45** and **46** in a clockwise direction and when this tension eases, the spring **47** returns the crank arms **45** and **46** in a counterclockwise direction. A pawl **53** for preventing clockwise motion of the ratchet wheel **44** is yieldingly pressed toward engagement with the ratchet wheel **44** by a spring **54** anchored in the base **40**. A pawl **55** pivotally mounted on the arm **46** is arranged to translate reciprocating motion of the arm **46** into counterclockwise motion of the ratchet wheel **44**. It is desired that both the pawls **53** and **55** be released from the ratchet wheel **44** whenever the bell crank arms **45** and **46** are moved to the position shown in FIG. 5 corresponding to a preselected tension on the line **44** to the end that the reel core **42** may free spool to pay out a length of the line **41** sufficient to lower the tension on the line **41** below said preselected value. For this purpose a pin **56** is mounted in the arm **45** so as to engage and release the holding pawl **53** and a pin **57** is mounted in the base **40** in position to be engaged by and release the driving pawl **55** when the arms are moved to the position shown in FIG. 5.

If it is now considered that the buoy supporting the base **40** is on the surface with the mooring line **41** connected to an anchor on the bottom, wave action will function as follows to take up slack in the mooring line **41**. As the buoy rises on a wave the line **41** is tightened slightly, pulling down the bell crank arm **46** and with it the pawl **55** which engages another tooth on the ratchet wheel **44** so that as the wave passes the spring **47** returns the arm **56** to its original position which movement rotates the wheel **44** counterclockwise to reel in a short length of the line **41**, the new position of the wheel **44** being held by the pawl **53**. This wind up action is repeated by each passing wave until the desired short scope mooring is realized. When the buoyancy of the buoy is increased sufficiently by a rising tide the tension on the line **41** increases above the preselected value to pull the arm **46** to the nearly vertical position shown in FIG. 5 at which position the pawls **53** and **55** are moved by the release pins **56** and **57**, respectively, to disengage both pawls from the ratchet wheel **44** permitting the pay-out of the line **41** which reduces the tension thereon until the spring **47** rotates the bell crank counterclockwise which moves the pawls **53** and **55** out of engagement with the release pins **56** and **57** respectively whereupon these pawls engage the ratchet wheels **44** thus preventing the pay-out of the line **41**. As the tide continues to rise this free-spooling of the reel core **42** is repeated as necessary. As the tide recedes the line **41** is periodically taken in or shortened by wave action as above described until the predetermined short scope mooring is accomplished.

From the foregoing it will be evident to those skilled in the art that by using an anchor capable of overcoming the combined buoyancy of the float member and the line adjusting mechanism the pay-out mode of operation will provide a delayed buoy rising time when the buoy is initially planted.

While for the purpose of disclosing the invention preferred embodiments thereof have been described in detail to enable those skilled in the art to practice the invention, it is to be understood that many modifications may be made therein without departing from the invention the scope of which is pointed out in the appended claims.

What is claimed is:

1. Apparatus for maintaining a short scope mooring for an anchored buoy comprising

a buoyant device and

an anchor,

a mooring line for connecting said device to the anchor,

a rotatable reel having a length of said line wound thereon, and

means responsible to tension changes within a certain range of magnitudes in said line due to wave action on said device for rotating said reel only in the direction to wind on said line as long as the maximum tension on said line is less than a predetermined value,

said tension responsive means for rotating said reel including

a ratchet wheel connected in driving relation to said reel,

a holding pawl yieldingly pressed toward engagement with the ratchet wheel for preventing reel unwinding motion thereof,

a reciprocating lever spring loaded in one direction and movable in the opposite direction by tension in said line, and

a ratchet pawl enabling a movement of said wheel to be effected in said one direction with slip or freedom in said opposite direction.

2. Apparatus in accordance with claim **1** wherein movement of said lever in said opposite direction beyond a predetermined position disengages both the holding pawl and the ratchet pawl from said ratchet wheel.

3. In combination

a buoyant member and

an anchor therefor,

a mooring line for connecting said member to its anchor,

a rotatable mooring line reel having an axis,

a lever rockable about the axis of said reel,

a pawl and ratchet device coupling the lever to said reel so that movement of the lever in one direction is communicated to said reel with slip in the opposite direction,

means responsive to increases in flotation forces acting on the buoyant member when it is riding on the surface in anchored condition for moving the lever in said opposite direction, and

spring means yieldingly urging said lever in said one direction.

4. Apparatus for maintaining a short scope mooring for an anchor buoy comprising

a buoyant device and

an anchor,

a mooring line for connecting said device to the anchor,

a rotatable reel having a length of said line wound thereon, and

means responsive to tension changes within a certain range of magnitudes in said line due to wave action on said device for rotating said reel only in the direction to wind on said line as long as the maximum tension on said line is less than a predetermined value,

said tension responsive means being operative to permit free spooling of said reel during the time the tension on said line is in excess of said predetermined value.

References Cited by the Examiner

UNITED STATES PATENTS

2,293,936	8/42	Crooke	254—172
3,005,215	10/61	Colt et al.	9—8
3,020,567	2/62	Colt	9—8
3,093,848	6/63	Schick et al.	9—8

MILTON BUCHLER, *Primary Examiner.*

FERGUS S. MIDDLETON, *Examiner.*