June 1, 1965 R. R. WATERMAN 3,186,484

HOT WATER FLOOD SYSTEM FOR OIL WELLS

Filed March 16, 1962

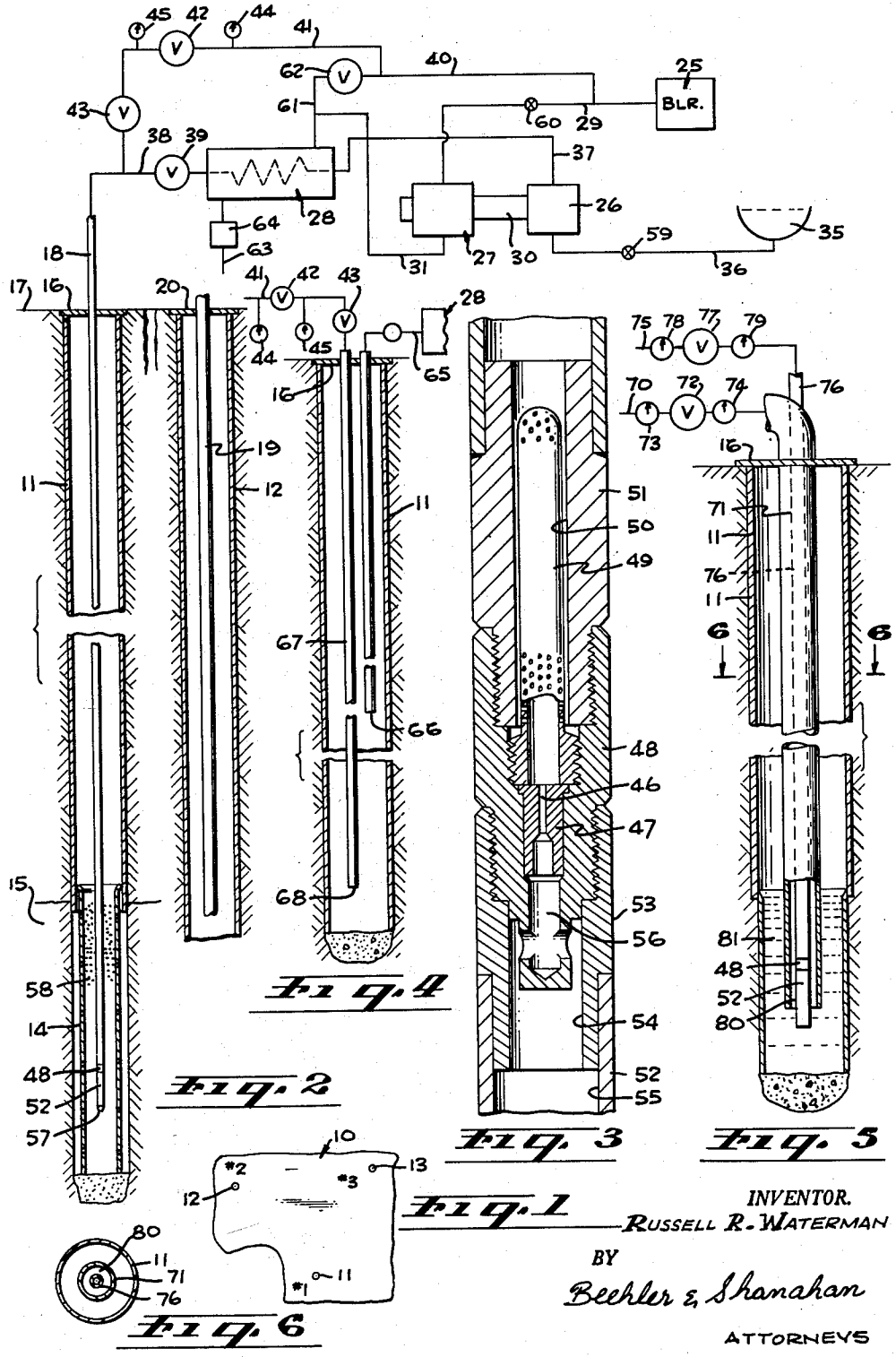

INVENTOR.
RUSSELL R. WATERMAN
BY
Beehler & Shanahan
ATTORNEYS

United States Patent Office

3,186,484

Patented June 1, 1965

1

3,186,484
HOT WATER FLOOD SYSTEM FOR OIL WELLS

Russell R. Waterman, Long Beach, Calif., assignor of ten percent to Vernon D. Beehler, Los Angeles, Calif.

Filed Mar. 16, 1962, Ser. No. 180,147
4 Claims. (Cl. 166—52)

The invention relates to oil well heating and has special reference to a system and apparatus for steam heating wherein water is heated by steam and in which pressure is built up in a flood water well to create a hot flood water drive from the flood well so that oil can be pumped or otherwise extracted from production wells in the same field which, except for the flooding system would either be unproductive or sufficiently marginal not to warrant production.

More particularly the invention relates to the economical use of steam in a hot water flood system wherein pressure is generated in the flood water supply by a steam pump under conditions where exhaust heat is saved and employed in a fashion such that the exhaust heat adds to the heat available in the flood water supply.

For a great many decades many attempts have been made to carry heat into oil wells several thousands of feet below the surface. Some of these early attempts contemplated recirculating hot water systems and in some instances recirculating oil systems or other fluid systems on the theory that the heating fluid should be recovered intact from the well and then reheated before being passed into the well a second time. The great defect in such systems has been the tremendous distance between the surface and the strata. Where thousands of feet are encountered, virtually all of the heat is lost before it ever reaches the producing strata and hence, except for very shallow wells, heating of this nature has not been practical.

On other occasions attempts have been made to employ steam whereby a greater amount of heat can be carried deep into the well. Here too, however, early attempts were completely unsuccessful because of an inability to control the steam after having passed it into the well except by periodically exhausting steam into the well. Many detrimental conditions accompany the exhaust of live steam into the well such as the untimely emulsification of the production especially where it is to be taken out of the ground through the same well in which the steam is introduced.

Although hot oil flooding has been attempted, such attempts can only be carried on in a well where no pressure is maintained. Although some increases in the production of the same well have been experienced, the increases have rarely been of a sustained character and the net result has been a decrease in production rather than an increase. On still other occasions combinations of systems have been attempted in order to get hot fluids in the well deep below the surface but the apparatus has to a large degree been too bulky and cumbersome to be lowered into a casing of average diameter without undue crowding, especially where other piping such as a production line needs also to occupy a portion of the space in the casing.

More recently attention has been turned to water flooding of producing areas in order to substitute a water drive for the natural gas drive or other pressure which may originally have been present in the strata and subsequently released or otherwise lost. Although cold water flooding has been successful to a degree, it has not always been possible or practical to build up an adequate amount of pressure, but more importantly even when great pressures have been possible, cold water flooding has not been sufficiently successful because of the high viscosity of

2

residual secondary oil in many formations which resists virtually all attempts to make it flow.

It is therefore among the objects of the invention to provide a new and improved system and apparatus for hot water flooding of oil wells in such fashion that the flood water is not only placed under pressure but heated adequately so that in creating the water pressure drive, the heated condition of the water additionally serves to improve the flow of oil in the strata.

Another object of the invention is to provide a new and improved system and apparatus for creating a hot water flood drive under pressure which is particularly economical of steam in that steam is put to a double use, namely, that of supplying water pressure through a pump and also that of heating the water so that virtually a minimum amount of the heat in the steam is lost, thereby making an economical practicable water drive system.

Still another object of the invention is to provide a new and improved hot water flood system and apparatus for production of oil by water flooding wherein the apparatus is simplified by combining water lines and steam lines both in the surface equipment as well as in the equipment in the flood well in order to greatly improve the economy of the operation.

Still further among the objects of the invention is to provide a new and improved system for producing oil through secondary recovery by water flooding wherein an improved amount of heating and pressure is made possible so as to drive water at high temperature under pressure into the strata, thereby to greatly improve the ability of the oil to pass to the production wells without need for pressures as high as would otherwise be necessary.

With these and other objects in view, the invention consists in the construction, arrangement and combination of the various parts of the device, whereby the objects contemplated are attained, as hereinafter set forth, pointed out in the appended claims and illustrated in the accompanying drawings.

In the drawings:

FIGURE 1 is a schematic diagram showing three wells in a water flood system.

FIGURE 2 is a schematic view of the system applied to a water flood well and a production well of the type illustrated in FIGURE 1.

FIGURE 3 is an enlarged fragmentary longitudinal sectional view of one form of control for hot fluid in the well.

FIGURE 4 is a longitudinal sectional diagrammatic view of a second form of device for injecting fluid into a flood well.

FIGURE 5 is a diagrammatic longitudinal sectional view of still another form of device for injecting hot fluid into a well.

FIGURE 6 is a cross-sectional view taken on the line 6—6 of FIGURE 5.

In an embodiment of the invention chosen for the purpose of illustration there is shown an oil field indicated generally by the reference character **10** wherein there has been drilled a flood well No. 1 having a casing **11** and two production wells Nos. 2 and 3, the production well No. 2 having a casing **12** and the production well No. 3 having a casing **13**. This, however, is illustrative only since the number of wells, both flood wells and production wells, may vary considerably depending upon the character of the field and a variety of individual conditions.

The casing **11** of the flood well has a perforated liner **14** extending throughout the depth of the producing strata **15**. A cap **16** is applied to the top of the casing adjacent the ground level **17** so that the casing can be pressurized. A pipe **18** extends through the cap **16** and is carried down

through the casing 11 past the lower end and through a substantial portion of the liner 14. The pipe may be conventional steam pipe with or without high pressure fittings supplied in customary twenty-foot lengths as is commonly employed in oil field work. The pipe may be as small as one inch iron pipe size and as much larger as may be needed to accommodate the flow of flood water, condensate and steam. Hence, the pipe may be as large as two or three-inch iron pipe size.

The casing 12 is similar although only the upper portion is shown. In this instance a tubing line 19 extends into the casing through a cap 20 and would ordinarily be provided with a pump (not shown) near the bottom in the conventional fashion so as to lift the production fluid from the bottom of the well to the surface. Details of the pumping equipment and system have not been supplied inasmuch as conventional construction only is involved.

To provide hot flood water for well No. 1 and to additionally provide pressure in well No. 1 to create a fluid drive, a heating system for water coupled with a means for generating pressure is provided upon the surface for well No. 1 which is the flood well. This system is embodied in part in a boiler 25 of some appropriate conventional construction, a pump 26 operated by a reciprocating direct connected steam cylinder engine or other type of steam engine 27 and a heat exchanger 28.

From the boiler a steam supply line 29 supplies the steam engine 27 in order to drive the pump 26 through a drive shaft 30. An exhaust steam line 31 is connected directly to the heat exchanger 28 instead of being returned to the boiler 25. By reason of this, when as is usually the circumstance a substantial amount of heat remains in the steam after having been passed through the engine, the heat is used efficiently by passing it directly to the heat exchanger where virtually all of the heat can be consumed in heating the flood water.

A reservoir 35 supplies flood water to the pump 26 through a flood water line 36. Flood water from the pump 26 passes through a flood pressure supply line 37 to the heat exchanger 28 and from the heat exchanger to the pipe 18 through a connecting flood water pressure line 38 in which is a back flow check valve 39. Suitable conventional valving (not shown) is otherwise provided throughout the water system.

In the system described to this point it will be noted that the exhaust steam from the engine 27 is employed to heat the flood water which has already been pressurized, the heat exchange taking place in the heat exchanger 28 from which hot flood water under pressure passes to the pipe 18 and thence into the casing 11.

To augment the amount of heat in the pipe 18, steam may be conducted from the boiler 25 through portions 40 and 41 of a primary steam line to the pipe 18, there being provided a shut-off valve 42 in the primary steam line and a back flow check 43. Gages 44 and 45 are mounted on respectively opposite sides of the shut-off valve 42. When this circumstance prevails, there will be provided an orifice 46 in an orifice block 47 contained in a fitting 48 at the bottom of the pipe 18. A screen 49 located in a bore 50 in a collar 51 will keep dirt from contaminating the orifice 46. A condensing line 52 secured to a collar 53 attaches by threaded engagement with the fitting 48 so that a passage 54 in communication with a passage 55 in the condensing line communicates with an outlet passage 56 from the orifice 46. The orifice 46 is a constantly open flow control hydraulic orifice selected as to capacity so that it is capable of passing all of the flood water coupled with all of the condensate created by the change of stem to water in the pipe 18, where steam is in fact supplied, the orifice being slightly greater than that needed to pass the full amount of liquid so that a slight throttling action will take place as a small excess of steam passes the orifice.

Where it is desired that no steam be admitted to the well, such steam as serves to throttle the orifice and then passes downwardly through the passages 54 and 55 is condensed within the condensing line 52. A check valve (not shown) may be provided, if desired, at the outlet end 57 of the condensing line 52.

In order to effectively control the system as last described, when steam is sent into the pipe 18 the gages 44 and 45 will be watched and when the gage 45 shows an abrupt change in pressure, which will take place when an excess of condensate arrives at the orifice 46, the shut-off valve 42 can then be manipulated in order to set the gages on both sides at some selected constant pressure. The pressure selected will be determinative of the amount of heat passed by the steam into the well. For the last defined system to work effectively, it will be found preferable to maintain a quantity 58 of hot flood water in the bottom of well No. 1 to a level more or less even with the top of the producing strata 15. Suitable conventional gaging means can be employed to determine the level and the level adjusted by controlling the amount of flood water flowing from the reservoir to the pump by means of a shut-off valve 59 or, if desired, by adjusting the operation of the pump by means of a suitable steam valve 60 through which steam flows to the engine 27.

Where still more heat may be desired for the flood water, a by-pass steam line 61 having a control valve 62 therein may pass steam directly from the primary steam line 40, 41 to the heat exchanger 28 and thereby heat the flood water to a greater extent in the heat exchanger. A condensate return line 63 in which is a trap 64 may be employed to conduct condensate back to the boiler or to the reservoir as desired.

On some occasions, and especially where there is no objection to injecting steam directly into the flood well No. 1, steam and water may be passed separately into the well, as shown in FIGURE 4. In this instance flood water from the heat exchanger 28 may pass through a water line 65 through the cap 16 directly into the casing and flow from an outlet 66 in the bottom of the water line. Steam from the primary steam line 41 in which is located the shut-off valve 42 and gages 44 and 45 may pass through the back flow check valve 43 to a steam line 67 and thence through the cap 16 into the casing 11 to an outlet 68 at the bottom. If desired, an orifice like the orifice 46 and its appropriate orifice block 47 and fitting 48 may be employed at the outlet 68, either with or without the condensing line 52.

In a more compact version of the system, as illustrated in FIGURE 5, the heat exchanger is made part of the equipment in the casing 11. To accomplish this, water from a source of supply such as the reservoir 35 passes through a flood water pipe 70 under pressure and thence through the cap 16 to a down flow water jacket 71. A shut-off valve 72 is provided in the flood water pipe flanked on opposite sides respectively by gages 73 and 74. Steam from an appropriate source of supply such as the boiler 25 flows through a steam line 75 to a steam jacket 76 which is located within the water jacket 71. A shut-off valve 77 in the steam line is flanked on opposite sides respectively by gages 78 and 79. At the bottom of the steam line 75 there is located one of the fittings 48 carrying the constantly open flow control orifice 46 in the block 47 in substantially the same manner as heretofore described. Outflow from the orifice 46 communicates in the same manner heretofore described with the condensing line 52.

As will be noted from an examination of FIGURE 6, the water jacket 71 is only slightly greater in diameter than the steam jacket 76 but the difference in the diameters provides a substantial flow area annular in shape indicated by the reference character 80. By proper adjustment of the shut-off valve 72 a bath 81 of flood water under pressure may be maintained in the bottom of the well to a level, if desired, substantially even with the top of the producing strata. In this way the lower end of the steam jacket 76 can be kept constantly immersed in water so that there will be a substantial transfer of heat from

the steam jacket to the water jacket adjacent the bottom of the well. The amount of heat transfer can be carefully controlled by manipulation of the shut-off valve **77** in conjunction with observation of the gages **78** and **79**. By use of the gages and the shut-off valves, as shown in FIGURE 5, there is considerable versatility imparted to the system so that the pressure, temperature and quantity of flood water in the flood well can be readily controlled and varied at will.

In the form of invention last defined considerable economy is effected since all surface lines can be insulated and insulation can be readily dispensed with for those portions of the lines identified as the steam jacket and water jacket respectively within the casing inasmuch as virtually all of the heat emitted within the casing is useful in keeping the flood water up to temperature before driving it under pressure into the strata. If desired, however, insulation can be applied to the water jacket **71** for a substantial distance into the well so that the major amount of heat transfer takes place near the bottom and immediately adjacent the producing strata as is possible by carefully controlling the level of the bath **81**.

While the invention has herein been shown and described in what is conceived to be the most practical and preferred embodiment, it is recognized that departures may be made therefrom within the scope of the invention, which is not to be limited to the details disclosed herein but is to be accorded the full scope of the claims so as to embrace any and all equivalent devices.

Having described the invention, what is claimed as new in support of Letters Patent is:

1. A hot flood water drive system for the secondary recovery of oil from producing strata comprising a production well extending into the strata having a pump line extending therefrom, a pressure sealed flood well extending into the strata and a hot flood water pressure line extending into the flood well, said pressure line comprising a pipe extending from the surface to near the strata, a source of supply of steam, a supply of flood water, a flood water pump connected to said supply of flood water and a steam powered actuator for said pump, a steam supply line connected between said source of supply of steam and said actuator, a heat exchanger having a water passage therethrough and a steam jacket therein in heat exchange relationship with the water passage, a steam exhaust line from said actuator to the steam jacket in said heat exchanger, a hot flood water connecting line from said pump to the water passage of said heat exchanger, said water passage of said heat exchanger being connected to said pressure line, and a live steam branch line from said source of steam supply extending into the steam jacket of the heat exchanger whereby to create a hot water drive in the strata.

2. A hot flood water drive system for the secondary recovery of oil from producing strata comprising a production well extending into the strata having a pump line extending therefrom, a pressure sealed flood well extending into the strata and a hot flood water pressure line extending into the flood well, said pressure line comprising a pipe extending from the surface to near the strata, a source of supply of steam, a supply of flood water, a flood water pump connected to said supply of flood water and a steam powered actuator for said pump, a steam supply line connected between said source of supply of steam and said actuator, a heat exchanger having a water passage therethrough and a steam jacket therein in heat exchange relationship with the water passage, a steam exhaust line extending from said actuator to the steam jacket in said heat exchanger, a hot flood water connecting line extending from said pump to the water passage of said heat exchanger, said water passage of said heat exchanger being connected to said pressure line, and a live steam branch line from said source of steam supply extending into the steam jacket of the heat exchanger whereby to create a hot water pressure drive in the strata.

3. A hot flood water drive system for the secondary recovery of oil from producing strata comprising a production well extending into the strata, a pressure sealed flood well extending into the strata and a hot flood water pressure line extending into the flood well, said pressure line comprising a pipe extending from the surface to near the strata, a constantly open flow restricting orifice adjacent the bottom of said pressure line and a condensing pipe between the orifice and the lower end of said pressure line, a source of supply of steam, a supply of flood water, a flood water pump connected to said supply of flood water and a steam powered actuator for said pump, a steam supply line connected between said source of supply of steam and said actuator, a heat exchanger having a water passage therethrough and a steam jacket therein in heat exchange relationship with the water passage, a steam exhaust line extending from said actuator to the steam jacket in said heat exchanger, a hot flood water connecting line extending from said pump to the water passage of said heat exchanger, said water passage of said heat exchanger being connected to said pressure line, and a live steam branch line extending from said source of steam supply connected to said pressure line, said orifice having a cross-sectional area of a size for passing into the flood well slightly more water than the aggregate of all the hot flood water and condensate from the pressure line whereby to create a hot water drive in the strata.

4. A hot flood water drive system for the secondary recovery of oil from producing strata comprising a production well extending into the strata having a pump line extending therefrom, a flood well extending into the strata comprising a pressure sealed casing and a hot flood water pressure line extending into the casing, said pressure line comprising a pipe extending from the surface to near the bottom of said flood well, a constantly open flow restricting orifice adjacent the bottom of said pressure line and a condensing pipe between the orifice and the lower end of said pressure line, a source of supply of steam under pressure, a supply of flood water, a flood water pump connected to said supply of flood water and a steam powered actuator for said pump, a steam supply line connected between said source of supply of steam and said actuator, a heat exchanger having a water passage therethrough and a steam jacket therein in heat exchange relationship with the water passage, a steam exhaust line extending from said actuator to the steam jacket in said heat exchanger, and a condensate return extending from the steam jacket to said source of steam supply, a hot flood water connecting line extending from said pump to the water passage of said heat exchanger, said water passage of said heat exchanger being connected to said pressure line in said flood well, and live steam branch lines extending from said source of steam supply, one of said steam branch lines extending into the steam jacket of the heat exchanger and one of said steam branch lines being connected to said pressure line, said last identified branch line having a control valve and a check valve therein, said orifice having a cross-sectional area of a size for passing into the flood well slightly more water than the aggregate of all the hot flood water and condensate from the pressure line whereby to create a hot water drive in the strata under pressure supplied by steam and said pump.

References Cited by the Examiner

UNITED STATES PATENTS

1,237,139	8/17	Yeomans	166—11
1,491,138	4/24	Hixon	166—11
2,148,717	2/39	Whitney	166—11
2,828,821	4/58	Waterman	166—57
3,028,916	4/62	Waterman	166—62

CHARLES E. O'CONNELL, *Primary Examiner.*