March 30, 1965 O. BRÉTING 3,175,771

FUEL INJECTORS FOR INTERNAL COMBUSTION ENGINES

Filed Oct. 19, 1962 2 Sheets-Sheet 1

Fig. 1.

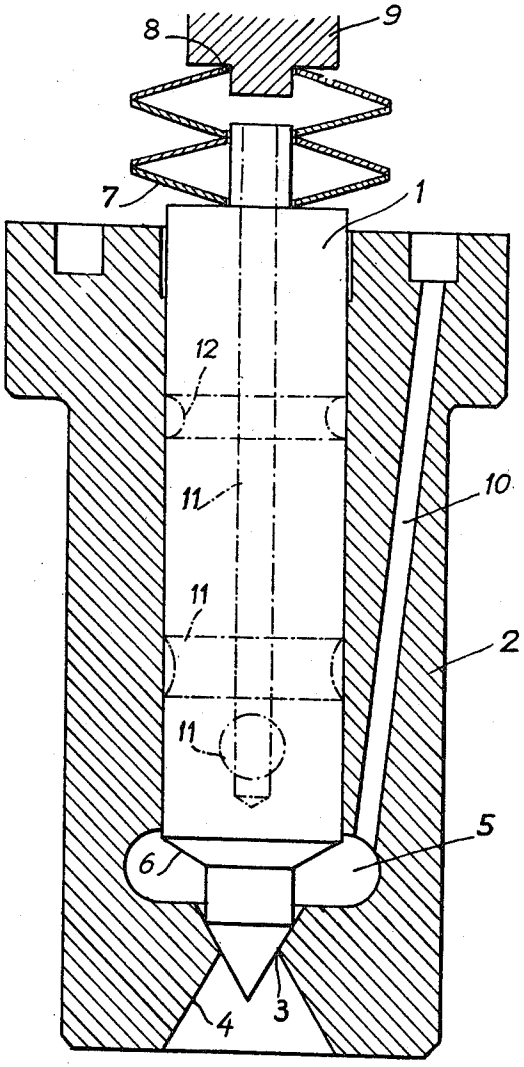

Inventor
Olivier Bréting
By Stevens, Davis, Miller & Mosher
Attorneys

March 30, 1965 O. BRÉTING 3,175,771

FUEL INJECTORS FOR INTERNAL COMBUSTION ENGINES

Filed Oct. 19, 1962 2 Sheets-Sheet 2

Fig. 2.

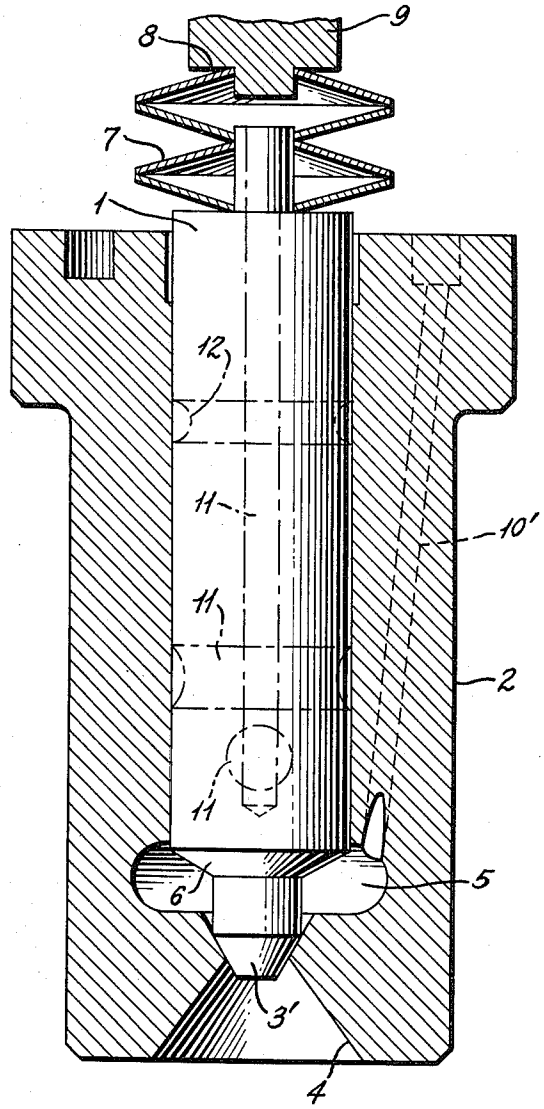

INVENTOR
Olivier Bréting

BY Stevens, Davis, Miller & Mosher
ATTORNEYS

United States Patent Office

3,175,771

Patented Mar. 30, 1965

1

3,175,771
FUEL INJECTORS FOR INTERNAL COMBUSTION ENGINES

Olivier Bréting, 5 Ave. Valioud,
Sainte-Foy-les-Lyon, France

Filed Oct. 19, 1962, Ser. No. 231,726
Claims priority, application France, Nov. 4, 1961, 42,001, Patent 1,312,045
1 Claim. (Cl. 239—533)

It is known that there is a constant search for improving the grade of fuel atomization of a fuel injector of thermal engines, notably diesel engines. In fact, in compression-ignition engines the ignition time period to which the quantity of fuel burned according to the detonating process is subordinated depends very closely on the fuel injection atomization fineness. As this quantity of detonating fuel involves simultaneously the characteristic and unpleasant noise of diesel engines together with a strong reduction in the engine efficiency, it appears that the quality of the initial portion of the combustion is of particular importance.

Now it was amply proved that this atomization quality could not be attained with conventional injection methods and means. In fact, in most instances the first drops of injected fuel must clear many constricted or throttled passages successively so that their potential pressure is reduced and the final atomization occurring under a relatively low pressure is particularly poor.

This invention relates to a closed, automatic fuel injector wherein the valve member opens in the direction opposite to the fuel output, thus acting as a simple needle-valve device.

Tests have been made with a view to achieve in a needle-valve injector the atomization and the necessary fluid-tightness by means of the same co-operating surfaces of the needle-valve and injection nozzle. This mounting requiring a moderate valve lift for maximum efficiency led to particularly strict requirements regarding the valve spring; on the other hand, the composite mounting of the device made it particularly costly and impaired therefore its marketability.

The fuel injector according to the present invention is of the valve needle type wherein the valve face, by co-acting with the registering valve seat formed on the nozzle, will on the one hand atomize the fuel when the needle valve is lifted and on the other hand provide the necessary fluid-tightness when the needle valve is seated.

This last principle is already known per se and is set forth in detail in various works dealing with fuel injection. However, what characterizes the fuel injector according to this invention is on one hand the fact that the injector nozzle consists of a single member and on the other hand that the needle valve is seated under the influence of a lightweight yet powerful spring of which the action is coincident with the needle-valve action.

This spring meets two requirements: on one hand its thrust is applied directly on the needle-valve in order to reduce the weight of moving parts during the needle valve movements, and on the other hand its stiffness is such that the increase in the needle valve surface areas subjected to the injection pressure during the valve lift produces additional efforts incrementing the spring deflection by a height equal to the optimum lift of said needle valve. This lift is of the order of 0.004" for a 60-degree needle valve.

It may be noted that the spring action, which as already stated is coincident with the needle valve action and exerted in the direction of the valve axis, eliminates any side thrust in the needle valve movements and therefore conventional sources of wear and tear which are a frequent cause of valve jamming.

2

Reference will now be made to the accompanying drawings of which FIGURE 1 illustrates by way of example a typical embodiment of a fuel injector according to this invention, and FIGURE 2 illustrates a second embodiment thereof.

This device comprises a needle valve **1** similar to those of conventional needle-valve fuel injectors. The injection nozzle **2** may be consistent with standard requirements concerning the manufacture of these parts.

One specific feature of the fuel injector according to this invention is that the needle-valve face is such that its end portion **3**, on the downstream side of the needle valve, acts jointly as an atomizing nozzle when the fuel under pressure accumulating in chamber **5** has exerted an upward pressure on the thrust cone **6** sufficient to lift the valve.

In order to warrant a sufficient strength to the nozzle at the level of this valve face, the nozzle is formed downstream of the outer-most meridian **3** of this face with an outflaring surface **4**, according to a known arrangement now in general use in the manufacture of injection equipment. The angle of this outflaring surface **4** is greater than that of the injection jet in order to avoid any interference with this jet; however, an angle inferior to 90 degrees is preferred.

If desired, a cavity may be substituted for this outflaring or tapered surface, and in this case the cavity may have an optimum contour as determined by systematic tests. In fact, it is stated in certain conventional works dealing with fuel injection that under strictly determined conditions this cavity may play a substantial part in the atomization and improve the quality thereof.

The needle valve portion projecting from the atomizing nozzle constitutes a useless cone which may be very sensitive to the high temperatures attained in the combustion chamber. Therefore, this end portion may be truncated to increase the heat resistance.

According to a preferred embodiment of the injection device constituting the subject-matter of this invention, the light, strong spring exerting a constant force on the needle valve stem consists of a plurality of stacked dished washers, according to the rules well known in the technical field.

The upper portion **8** of this washer stacking is prestressed by an adjustable stop member **9** solid with the fixed part on which the injector is mounted, generally the so-called injector carrier (not shown).

The use of dished washers reduces to a minimum the weight of the movable component elements of the injector, thus improving the operation of the device of this invention, which takes place as follows:

The pressure wave from the fuel pump (not shown) or another source reaches the chamber **5** through a passageway **10**. When the pressure in chamber **5** has risen to a value such that the action exerted on the thrust cone **6** exceeds the force of spring **7**, the needle valve is lifted. At this time the wet surface area increases very rapidly, thus reducing the time period during which the atomization is rather poor, a fact well known to those conversant with the art, since the optimum requirements for a good-quality atomization are not met. Moreover, it is known that the optimum valve lift, corresponding to the tapered atomizing nozzle, is very low, of the order of 0.004". A valve lift of this value is thus rapidly attained and permits at the same time a direct atomization. Under these conditions it will be seen that as the pressure reaching the injector is absorbed completely for fuel atomizing purposes only the injector according to this invention will effect quickly a high-grade atomization, under optimum and high pressure conditions. This is the scope contemplated, which permits of reducing considerably the ignition

time period constituting a very important element in the operation of diesel or compression-ignition engines. Actually, the noiselessness and economy of operation of diesel engines are to a large extent subordinate to this reduction in ignition time.

Conventionally, the tapered nozzle of this injector is improved by a slight centrifugal action. The latter may be created by inclining conduit **10** with respect to the vertical axis of the injector and also with respect to a plane through said vertical axis and the point of intersection of said conduit with the chamber of said injector. This embodiment is shown at FIGURE 2, wherein the inclined or oblique conduit is referenced as **10'**, and the end **3'** of the needle valve is truncated.

On the other hand, in order to reduce the weight of the movable component elements of the injector the needle valve may be provided with various perforations **11** and/or circular grooves **12** to constitute a kind of labyrinth and reduce injector leakages.

Any other suitable spring means capable of applying a centered and relatively strong force with a moderate deflection may be substituted for the dished washers illustrated.

Of course, the principles of this injection device are also applicable to different types of injectors, such as long injectors, non-conventional injectors, etc. without departing from the spirit and scope of the invention. Besides, many modifications may be brought to the specific form of embodiment illustrated, described and suggested herein without departing from the basic principles of the invention as set forth in the appended claim.

I claim:

An automatic fuel injector for thermal motors of the close type comprising, a single axial needle valve having a conical tapered end portion and a thrust cone portion and being adapted to open in a direction opposite the flow

of fuel, a nozzle having a central channel which houses said needle, said nozzle having at its lower part a fuel-receiving chamber into which there opens an oblique conduit communicating with the injector members for placing the fuel under pressure, said conduit being oblique with respect to the vertical axis of said injector and also with respect to a plane through said vertical axis and the point of intersection of said conduit with the chamber of said injector, and said nozzle having a seat below said chamber which cooperates with the conical end of said needle, as well as a frusto-conical shaped extension of the opening of said seat with an angle greater than that of the jet of fuel, said needle being supported by a stack of washer springs acting directly at the top and the said fuel-feed conduit opening into the said chamber obliquely at the periphery of the latter so as to impart a centrifugal movement to the liquid projected out of the chamber, and said thrust cone portion being in the form of a conical tapered surface which defines a shoulder on which the accumulated fuel in said chamber exerts a pressure, thereby lifting said valve.

References Cited by the Examiner

UNITED STATES PATENTS

1,157,305	10/15	Frost.	
2,192,803	3/40	Purdy et al.	239—453
2,263,197	11/41	Tabb et al.	239—453
2,382,151	8/45	Harper.	

FOREIGN PATENTS

97,829	9/24	Austria.
91,209	4/97	Germany.
474,978	4/29	Germany.
20,758	9/11	Great Britain.

EVERETT W. KIRBY, *Primary Examiner.*