March 9, 1965 S. O. STANFIELD 3,172,319

MULTI-PURPOSE SPLIT SHOT PLIERS FOR FISHERMEN

Filed Aug. 21, 1962 2 Sheets-Sheet 1

Fig. 1

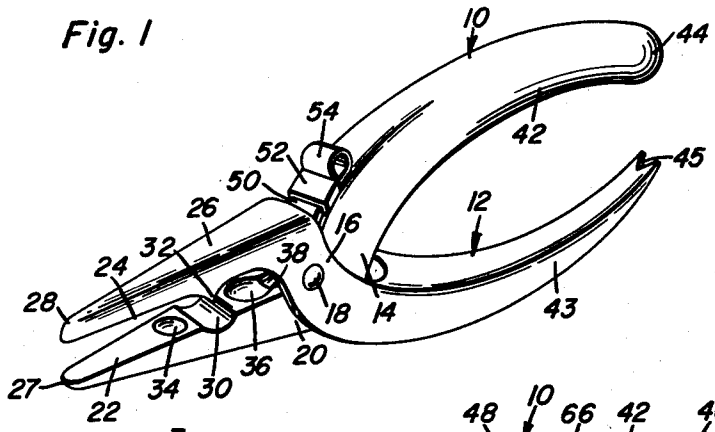

Fig. 2

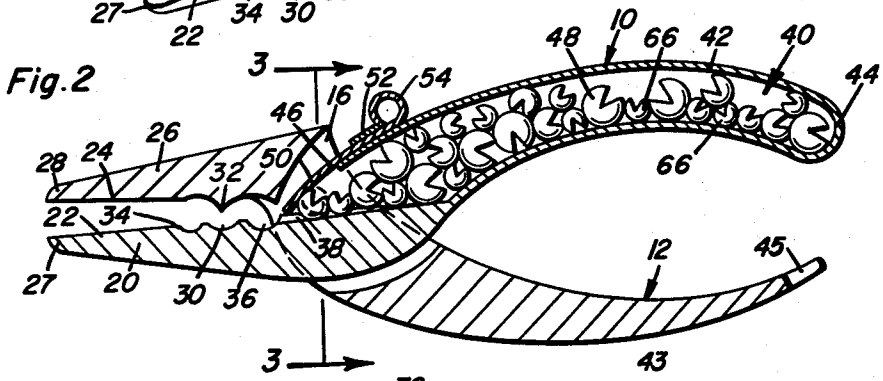

Fig. 4

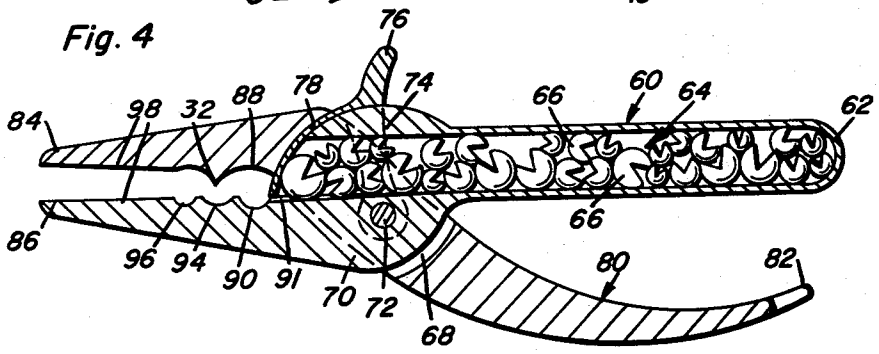

Fig. 3

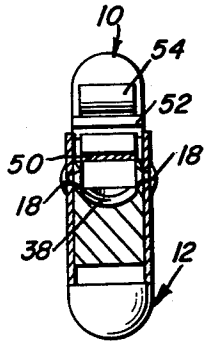

Stephen O. Stanfield
INVENTOR.

BY Thomas A. O'Brien and Harvey B. Jacobson
Attorneys

MULTI-PURPOSE SPLIT SHOT PLIERS FOR FISHERMEN

Filed Aug. 21, 1962 2 Sheets-Sheet 2

Fig. 5

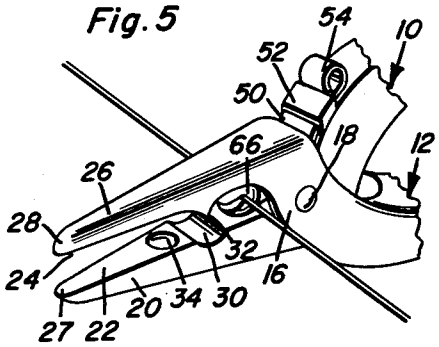

Fig. 6

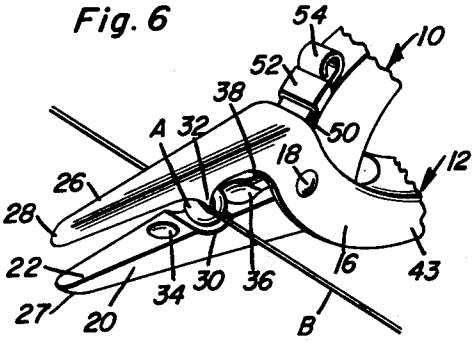

Fig. 7

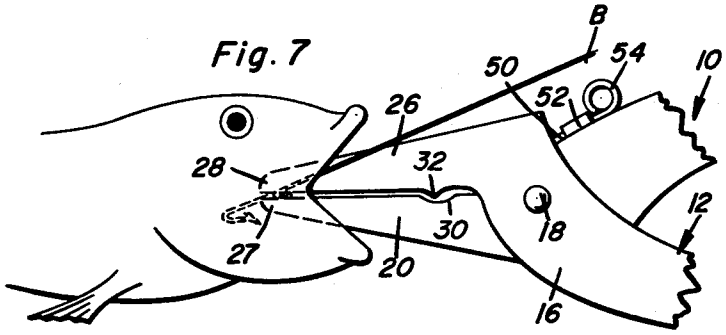

Fig. 8

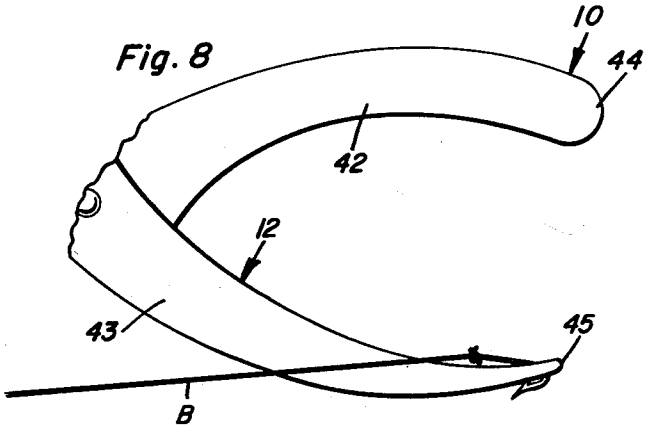

Stephen O. Stanfield
INVENTOR.

BY Thomas A. Robinson and Harvey B. Jacobson
Attorneys

United States Patent Office

3,172,319

Patented Mar. 9, 1965

1

3,172,319

MULTI-PURPOSE SPLIT SHOT PLIERS FOR FISHERMEN

Stephen O. Stanfield, Star Rte., Box 154, Fontana, Calif.

Filed Aug. 21, 1962, Ser. No. 218,242
3 Claims. (Cl. 72—410)

The present invention relates to a special purpose hand tool which is expressly designed and adapted for efficient use by fishermen and its primary purpose is to accommodatingly store split shot sinkers of various sizes and to selectively dispense the same for attachment to a fishing line or leader.

More explicitly, the invention comprises a pliers-type tool characterized by a pair of lever units with median portions thereof hingedly or pivotally connected together. These units are provided at outer or forward ends with special jaws which are movable toward and from each other and are provided at inner or rearward ends with novel handles. The opposed coacting surfaces of the jaws are unique and purposeful in form as will be hereinafter set forth. The handles are likewise uniquely devised with a view toward accomplishing other and improved results as will also be revealed.

One object of the invention is to improve upon Patent 2,765,687 of October 9, 1956, which has to do with a sinker applying device embodying a tubular body with suitably constructed and operated split shot sinker applying jaws at the forward end and which itself is fashioned into a handle-type split shot storing magazine.

A similar objective is to structurally, functionally and in other ways improve upon other prior art split shot sinker applying and dislodging jaw-equipped pliers or the like.

Another object of this invention is to provide a single tool which is simple, practical, economical, easy to employ and which is characterized by a construction wherein at least one handle is hollow and is fashioned into and provides a chamber or magazine for a multiplicity of sizes of split shot, the leading end of said handle being situated adjacent the pivot point between the lever units and embodying a suitable closure controlled discharge opening from which the sinkers are allowed to be dispensed one at a time and are then permitted to gravitate into the space between the jaws.

The invention is also to be recognized as a highly useful quality tool combining into one implement many of the most desired features which are intended to appeal to the average fisherman. To this end the tool embodies a hollow handle serving as the aforementioned magazine or container, and an openable and closable discharge end equipped with semi-automatic shutter or equivalent valving means. In addition, the jaws embody appropriate leading ends or nose portions which can be used to facilitate dislodging a fishhook from the mouth of a fish. Also, at least one of the handles terminates in a suitably notched end which may be effectually employed for fishhook loosening and removal needs.

These together with other objects and advantages which will become subsequently apparent reside in the details of construction and operation as more fully hereinafter described and claimed, reference being had to the accompanying drawings forming a part hereof, wherein like numerals refer to like parts throughout, and in which:

FIGURE 1 is a view in perspective of a pair of multi-purpose split shot sinker containing and dispensing pliers for use by fishermen constructed in accordance with the principles of the present invention;

FIGURE 2 is a view on a slightly larger scale and in section with the split shot appearing in elevation and

2

showing the use of different sizes capable of meeting the demands of most fishermen;

FIGURE 3 is a section on the vertical line 3—3 of FIGURE 2 looking in the direction of the arrows;

FIGURE 4 is a sectional view similar to FIGURE 2 and showing a modified hinge or pivot joint and discharge controlling shutter;

FIGURE 5 is a fragmentary perspective view with the handles omitted and the purpose of which is to show how the jaw surfaces come into play in squeezing and applying a split shot sinker to a fishing line or leader as the case may be;

FIGURE 6 is a perspective view similar to FIGURE 5 and showing the manner in which the jaws may cooperate for dislodging and removing a sinker;

FIGURE 7 is a similar view in side elevation the purpose of which is to illustrate how the restricted nose portions or terminals of the jaws may be employed for dislodging and removing a fishhook; and

FIGURE 8 is a view in side elevation with the jaws omitted but showing how one of the handles may be employed to disgorge and remove a deep-seated fishhook from the body of a fish.

By way of introduction to the description of the details it is to be pointed out that FIGS. 7 and 8, as already suggested, are for the purpose of illustrating purposes of the tool which while significant to the user are secondary to the other aspects of the overall concept. Also FIG. 4 has been placed to follow FIG. 2 because of the similar characteristics and features of the tool but will be treated as a modification. Consequently this explanation is to bring out the fact that like reference numerals will denote like component parts in all of the figures except FIG. 4. Proceeding with this idea in mind and referring primarily to FIGS. 1, 2 and 3 it will be evident that one lever unit is denoted by the numeral **10** and the companion lever unit by the numeral **12**. They are of similar dimensions and length as brought out in FIG. 2. The median portion **14** of lever unit **10** is passed between the median strap-like portions **16** of the lever unit **12** and the coacting portions are pivoted or hingedly joined to each other as at **18**. As perhaps better brought out in FIG. 3 individual peened rivets are employed for hinge pin connections and they are axially aligned. The lever unit **10** beyond the pivot point terminates in a tapering rigid generally straight jaw **20** having a jaw surface **22** opposed to the jaw surface **24** of the opposed jaw **26** on the lever unit **12**. Both jaws terminate in restricted beaks or nose portions **27** and **28**. It will be noted that the median portion of the surface **22** is provided with a transverse groove **30** which provides a seat or anvil for the split shot removal step depicted in FIG. 6 wherein the split shot is denoted at A. This surface is aligned with a V-shaped projection **32** which is also transverse and which is arranged to serve as a wedge-like spreader and which enters the split of the shot in a manner to open up the split and disconnect the shot from the fishing line or leader B (FIG. 6). To the left of the groove there is a part-spherical recess or seat **34** and to the right a larger recess or seat **36** which has a shot delivery trough or channel **38** cooperatively registrable therewith. This channel gradually lessens its depth as shown in FIG. 2 where it is communicable with the hollow chamber portion **40** of the top handle **42**. This handle has a blunt inner end portion as at **44** while the other end portion **46** is open to provide a discharge opening which latter registers with the groove or channel **36** to assist in feeding the split shot or sinkers **48** from the magazine or chamber **40** into the space between the openable and closable jaws. The discharge end por-

tion 46 is constructed to accommodate a slidingly mounted shutter or valve plate which is of the suitably shaped form illustrated in FIG. 2, which has a portion thereof slidingly confined in a loop-like fixed guide 52 and which terminates in a suitable fingergrip 54. This shutter constitutes a normally closed cover or valve and therefore the discharge end of the handle 42 provides the desired controllable dispensing or gravity feeding step. It is to be again stated here that the storing space in the magazine or chamber 40 is expressly designed and adapted to accommodate holding and dispensing of split shot sinkers of various sizes. This is a highly desirable feature of the invention as can be fully appreciated by the prospective user. By placing the thumb control 54 adjacent to the hinge point it will be evident that the handles can be grasped and manipulated with requisite nicety and that the controlled dispensing step is semi-automatic. It follows that when it is desired to put a split shot sinker onto the leader or line the slidingly mounted shutter 50 is drawn backward thus opening the discharge end of the magazine and allowing the split shot to roll by gravity directly along the guideway or channel 36 into the space between the jaws and to come to rest in the seat 35 whereupon when the jaws are closed or pressed together the split portion of the sinker is squeezed and applied to the line. The shutter is, however, normally closed and consequently when it is desired as shown in FIG. 6 to open up and remove the sinker the jaws are caused to function in the manner illustrated with the wedge-shaped rib coacting with the aforementioned split shot seat 30.

It is thought that the herein disclosed pliers-type split shot tool is soundly designed and engineered. It is extremely simple in form and design and is minus complicated triggers, springs and other easy-to-damage parts. It has been found to be trouble-free, durable, efficient in use and such that it should comply with the expectations of manufacturers from a standpoint of economy and other manufacturing needs. The construction is such that the user has at his disposal a supply of selectively usable split shot sinkers in a rugged easy-to-use implement.

With further reference to the handle 43 which is opposed to the handle 42 it will be noted that the rear end thereof is formed with a V-shaped notch 45 which can be used in the manner illustrated in FIG. 8 whenever necessary or desired to assist one in dislodging and removing a fishhook from the mouth of a trapped fish. Further the blunt beaks 27 and 28 in FIG. 7 serve a similar purpose when the fishhook is not so deeply embedded.

With reference now to the modification in FIG. 4 the hollow handle is denoted at 60, has a blunt rounded end 62, the hollow portion 64 providing a magazine or chamber for reception and retention of the gravity dischargeable split shot sinkers 66. The coacting intermediate portions of the lever units here, which are designated at 68 and 70, are pivoted together by way of a single pivot pin 72 which also serves to hingedly mount the arm portions 74 of a fork or yoke which carries a finger trigger 76 and a curvate hood-like shutter 78 for opening and closing the discharge end portion of the chamber. The other lever is denoted at 80 and the end portion 82 may or may not be provided with fishhook removing prongs. The jaws in this form of the invention are conveniently denoted by the numerals 84 and 86 and have the aforementioned features, for example, a shot squeezing surface 88 opposed to the anvil surface 90, a V-shaped shot opening rib 92 opposed to the transverse groove 94, and a shot cavity or seat at 96. The surfaces 98 of the jaws are movable toward and from each other in an obvious manner. Also the features and advantages already described and mode of operation set forth apply to this embodiment of the tool wherein, as already pointed out, there will be a channel 91 leading from the chamber 64 to the seat 90.

It is believed that a careful consideration of the specification in conjunction with the views of the drawing will enable the reader to obtain a clear and comprehensive understanding of the construction, the features and advantages and mode of using the tools. Therefore a more extended description is regarded as unnecessary.

The foregoing is considered as illustrative only of the principles of the invention. Further, since numerous modifications and changes will readily occur to those skilled in the art, it is not desired to limit the invention to the exact construction and operation shown and described, and accordingly all suitable modifications and equivalents may be resorted to, falling within the scope of the invention as claimed.

What is claimed as new is as follows:

1. For use by a fisherman, a pliers-like tool comprising a pair of pivoted handles terminating at their respective forward ends in opposed elongated pliers-like companion jaws, at least one handle being elongated and hollow and constituting a storage magazine adapted to store and dispense gravity-fed split shot sinkers of relatively varying sizes, said storage magazine being closed at a rearward end but open at a forward end from which the sinkers can be gravity released, at will, one of said jaws having an elongated planar surface provided proximal to said forward open end with a sinker seating and retaining recess, said surface also having an elongated shallow sinker guiding, gravitating and delivering channel, the forward end of said channel being unobstructedly open and directly communicable with said seating and retaining recess, the rearward end of said channel extending into and registering with the open end portion of said magazine, said channel gradually increasing in depth from the rearward end to the forward end, and a readily accessible manually actuatable shutter-like valve operatively mounted atop the magazine adjacent said open forward end and normally covering and closing said end and also a major portion of said channel and being manually movable to a position either partially or completely uncovering said open end and controllable at will in a manner to permit passage and gravitation of at least one of the sinkers via the channel for seated reception and retention in said recess.

2. Special purpose pliers for use by a fisherman and through the medium of which the fisherman is enabled to store split shot sinkers of various sizes and, when desired, to selectively dispense the same for ready attachment to a fishing line or leader comprising: a first lever unit provided at a forward end with a rigid jaw having a lengthwise surface provided with recess means for temporary reception and retention of a split shot sinker, said lever having a median portion, a hollow handle having a cooperating end joined to said median portion, the hollow portion of said handle constituting a magazine for storing and dispensing the aforementioned split shot sinkers, a rearward end of said handle being closed and the forward end having a discharge opening spaced from a coacting surface of said median portion and said surface being provided with an open-ended channel in line with said open end and having a forward open end thereof cooperating with said recess means, a shutter cooperable with the open forward end of said lever and normally closing the same and adjustable toward and from the jaw and recess means and also cooperating with the forward open end of said channel in a manner to permit the split shot sinkers to be delivered one by one via the channel and into a seating and retaining portion of the recess means, and a second lever unit having a jaw opposed to the first-named jaw, having a median strap portion with the straps thereof straddling and pivotally connected to the median portion of the first-named jaw unit, and having a handle spaced from but opposed to the hollow handle, said shutter being slidably mounted

and capable of being drawn and slid rearwardly in a manner to uncover the open end of the magazine, said shutter being provided at a rearward end with a fingergrip.

3. Special purpose pliers for use by a fisherman and through the medium of which the fisherman is enabled to store split shot sinkers of various sizes and, when desired, to selectively dispense the same for ready attachment to a fishing line or leader comprising: a first lever unit provided at a forward end with a rigid jaw having recess means in a lengthwise surface thereof for temporary reception and retention of a split shot sinker, said lever having a median portion with a cooperating end of a hollow handle joined thereto, the hollow portion of said handle constituting a magazine for storing and dispensing the aforementioned split shot sinkers, a rearward end of said handle being closed and the forward end having a discharge opening spaced from a coacting surface of said median portion and said surface being provided with an open-ended channel in line with said open end and having a forward open end thereof cooperating with said recess means, a shutter cooperable with the open forward end of said lever and normally closing the opening and adjustable toward and from the jaw and recess means and also cooperating with the forward open end of said channel in a manner to permit the split shot

sinkers to be delivered one by one via the channel and into a seating and retaining portion of the recess means, and a second lever unit having a jaw opposed to the first-named jaw, having a median strap portion with the straps straddling and pivotally connected to the median portion of the first-named jaw unit, and having a handle spaced from but opposed to the hollow handle, said shutter provided at a rearward end with a fingergrip, said shutter comprising a curved hood-like member mounted for opening and closing the open discharge end of the chamber portion of the magazine, said shutter being provided at a rearward end thereof with an outstanding fingergrip which is readily accessible and convenient for operation and functioning of the shutter.

References Cited by the Examiner

UNITED STATES PATENTS

870,108	11/07	Kowastch et al.
2,651,958	9/53	Deline.
2,806,229	9/57	Pletz.
2,837,950	6/58	Hardy.
2,844,980	7/58	Johnson.
2,920,514	1/60	McKeehan et al.

WILLIAM FELDMAN, *Primary Examiner.*